O. LUGO.

Electrodes for Electric Lights.

No. 207,753. **Patented Sept. 3, 1878.**

Figure 1.

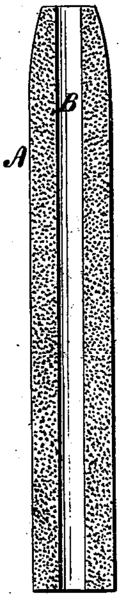

Figure 2.

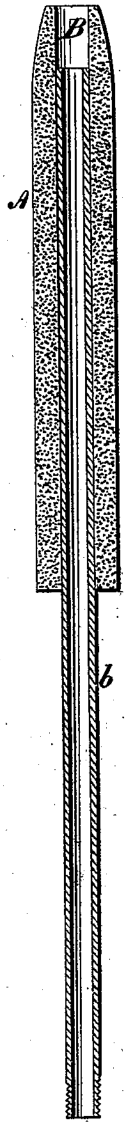

Figure 3.

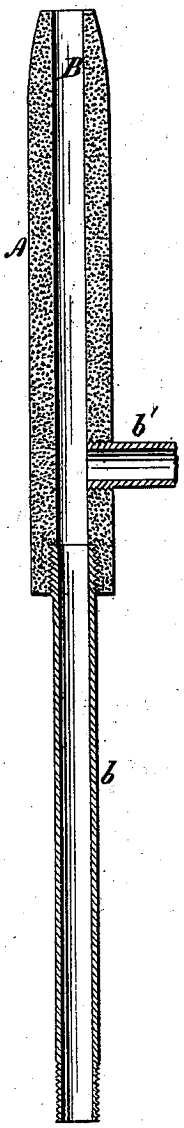

Figure 4.

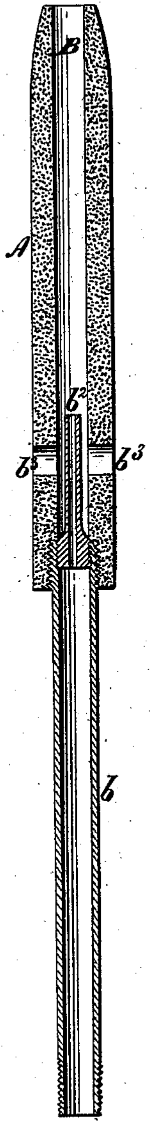

Figure 5.

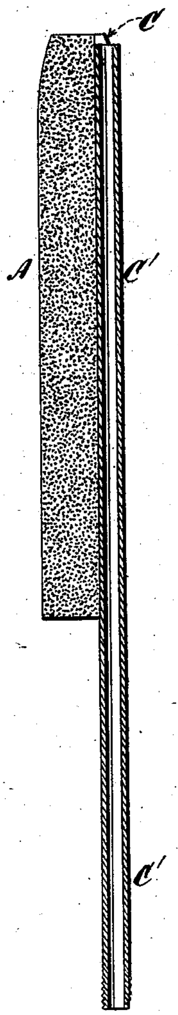

Witnesses:

Edw^d Peyton

Geo. W. Miatt

Inventor:

Orazio Lugo
Per Edw. E. Quimby
Atty.

N. PETERS, PHOTO-LITHOGRAPHER, WASHINGTON, D. C.

UNITED STATES PATENT OFFICE.

ORAZIO LUGO, OF FLUSHING, NEW YORK.

IMPROVEMENT IN ELECTRODES FOR ELECTRIC LIGHTS.

Specification forming part of Letters Patent No. **207,753**, dated September 3, 1878; application filed August 28, 1878.

CASE B.

To all whom it may concern:

Be it known that I, ORAZIO LUGO, of Flushing, Long Island, New York, have invented certain Improvements in Electrodes for Employment in the Production of Electric Light, of which the following is a specification:

My improvements relate to the introduction of air and other fluids into the electric arc; and my present invention consists in either making my electrodes tubular or in combining each of them with a tube which is wholly or partially surrounded by the carbon or other material of which the electrode is composed, for the purpose of affording a channel through which air or other fluids may be conducted and may be discharged from the points of the electrodes into the electric arc.

In another application of even date herewith, designated as "Case A," I have described the use of electrodes of porous material, and also tubular electrodes containing fibrous wicking for conveying a hydrocarbon or other combustible fluid into the electric arc by capillary action.

In my present invention I may make my tubular electrodes open at both ends, and rely upon the natural draft for creating a current of air through them; or I may connect them with pipes, through which air or any desired fluid or fluids may be forced from a distant point or points into and through the electrodes with any given pressure.

The accompanying drawings illustrating my improved electrodes are as follows: Figure 1 is a central longitudinal section of my tubular carbon electrode. Fig. 2 is a similar section of a tubular electrode having inserted in it a metallic or other pipe for supplying it with a combustible fluid from a distant reservoir. Fig. 3 is a similar section of a tubular electrode having a metallic supply-pipe connected with its base, and a pipe inserted laterally in it near the base, for the purpose of supplying it with fluids from two different sources. Fig. 4 is a similar section of an electrode connected at its base with a pipe for supplying gas, the mouth of the pipe being provided with a Bunsen burner, and the electrode being provided with lateral openings for admitting air into the interior of the electrode to assist in the combustion of the gas. Fig. 5 is a longitudinal section of an electrode, the material of which partially surrounds a metallic tube contained in a longitudinal groove on one side of the electrode, the tube being for connection with a distant reservoir of fluid, which is to be introduced into and burned in the electric arc.

My electrode A is made preferably of carbon, and has a central hole, B, extending longitudinally through it from end to end, as shown in Fig. 1.

If desired, a small metallic tube, *b*, may be inserted in the hole B, as shown in Fig. 2.

The tube *b* may be connected with a reservoir of fluid, placed at any convenient point, and may thus serve to conduct such fluid from the reservoir, and discharge it at any prescribed pressure from the point of the electrode into the electric arc.

The tube *b* may be inserted in the base of the electrode, as shown in Fig. 3, and another tube, b^1, may be inserted laterally in the electrode a short distance above its base, the two tubes being for the purpose of supplying two different fluids to the electrodes, if desired.

The tube *b*, inserted in the base of the electrode, may be provided at its mouth with a Bunsen burner, b^2, and lateral apertures b^3 may be made in the lower part of the electrode, for the admission of air when the tube *b* is connected with a reservoir of gas.

Instead of having a central hole in the electrode, it may have upon its surface the longitudinal groove C, as shown in Fig. 5, in which may be placed the connecting-pipe C′ for discharging a fluid from the point of the electrode.

I preferably incase my carbon electrodes in a metallic shell, for facilitating their electrical connection with the plus and minus wires of an electric circuit supplied with a current from a battery or other source of electricity.

The passage of air or other fluid through my electrodes tends to keep them cool and retard their consumption.

My electrodes may be employed for the production of the electric arc substantially as other electrodes have heretofore been so employed; but it will, of course, be understood that if my electrodes are fed toward each other by positive mechanical motion—as, for example, by clock-work—it will be necessary to lessen the usual rate of speed of such clock-work, because my electrodes last so much longer than those heretofore used.

Instead of arranging my electrodes vertically, one above the other, I prefer to arrange them side by side, with their upper ends inclined toward each other. The advantage of this mode of arrangement is, that stronger drafts of air are established through the electrodes when they are in an upright position. When so arranged, air is discharged into the electric arc from both electrodes; and, moreover, when the electrodes are in an upright position, fluid may be introduced into them with less danger of overflowing from their points, and the rate at which the fluid is supplied to them may be easily graduated to the rate of evaporation.

The effect of the currents of air discharged from the points of the electrodes is to promote the steadiness in position of the electric arc, and also to greatly increase its illuminating-power, and to make it practicable to considerably increase the distance between the electrodes, and consequently the length of the arc.

When my electrodes are placed in line vertically, one above the other, it will be advisable to connect the upper electrode with an air pump or blower, to force air downward through it into the electric arc. The natural upward draft will ordinarily be sufficient to supply air through the lower electrode.

I claim as my invention and desire to secure by Letters Patent of the United States—

1. In apparatus for producing the electric light, longitudinally tubular electrodes, relatively so arranged that air or other fluids may be discharged from the opposed ends of the electrodes into the electric arc, substantially as and for the purpose set forth.

2. A tubular electrode of any suitable material, having inserted in it a pipe for supplying a combustible fluid which is capable of being evaporated and ignited in the electric arc, substantially as described.

3. An electrode of suitable material, having a hole extending longitudinally through it, and having near its base one or more lateral openings extending from the longitudinal hole to the surface of the electrode, substantially as and for the purpose set forth.

4. A tubular electrode of any suitable material, provided near its base with one or more lateral openings extending from the longitudinal hole to the surface of the electrode, in combination with a Bunsen burner affixed to a pipe inserted in the base of the electrode, the pipe being for the purpose of discharging gas into the tube of the electrode, and the lateral opening or openings for the purpose of supplying a current or currents of air to assist the combustion of such gas in the electric arc, substantially as described.

5. An electrode of any suitable material, in combination with a tube applied longitudinally thereto, and wholly or partially surrounded by the material of which the electrode is composed, substantially as shown and described.

ORAZIO LUGO.

Witnesses:
ROBERT H. POLLOCK,
EDWD. PAYSON.

(No Model.)

L. COLBURN.

ELECTRIC ARC LAMP.

No. 316,240. Patented Apr. 21, 1885.

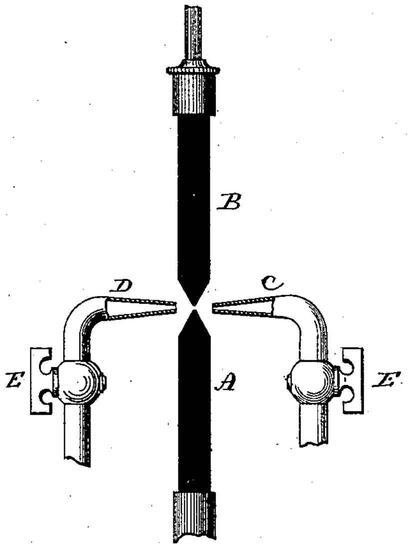

Witnesses.
J. H. Shumway
Jos. C. Earle

Ledyard Colburn
Inventor.
By atty.
Wm. C. Earle.

N. PETERS. Photo-Lithographer, Washington, D. C.

UNITED STATES PATENT OFFICE.

LEDYARD COLBURN, OF BIRMINGHAM, CONNECTICUT, ASSIGNOR OF ONE-HALF TO RICHARD R. COLBURN, OF SAME PLACE.

ELECTRIC-ARC LAMP.

SPECIFICATION forming part of Letters Patent No. 316,240, dated April 21, 1885.

Application filed March 13, 1884. (No model.)

To all whom it may concern:

Be it known that I, LEDYARD COLBURN, of Birmingham, in the county of New Haven and State of Connecticut, have invented a new Improvement in Electric-Arc Lamps; and I do hereby declare the following, when taken in connection with accompanying drawing, and the letters of reference marked thereon, to be a full, clear, and exact description of the same, and which said drawing constitutes part of this specification, and represents a sectional side view showing the two carbons of an arc lamp with the gas-jet and air-jet arranged independent of the carbons.

This invention relates to an improvement in electric-arc lamps, the object of the invention being to reduce the electric current without diminishing the brilliancy of the light; and my invention consists in combining with the carbons of an electric-arc lamp a jet of air and gas impinging directly upon the points of the carbons, so that the air and gas will mingle at those points and produce an intense heat upon the points, and whereby the electric current may be reduced to the extent that the carbons are heated by the gas, as more fully hereinafter described.

A represents one carbon and B the other carbon of a common arc lamp, to each of which the lines are led to form the arc between the points of the two carbons.

C is a contracting tube, terminating near the points of the carbon; D, a like tube, preferably arranged directly opposite the point of the tube C. To one of the tubes—say C—gas is supplied, and to the other tube, D, air is supplied, the quantity of air and gas being regulated by cocks E or otherwise.

When the circuit is closed and the arc formed between the two burners, the gas is supplied through the tube C, and instantly ignites. At the same time air is introduced through the other tube, D, in sufficient quantity to mingle with the gas and produce perfect combustion. Therefore this combined gas and air produces an intense heat directly at the points of the carbons, and which, with a greatly-reduced electric current, will heat the carbons to a point of brilliancy equal at least to the most brilliant effect produced by the usual strong electric current.

The air and gas may be supplied by any device which will deliver them under the requisite pressure.

I do not claim, broadly, supplying mixed gas and air at the points of the electrodes, as such, I am aware, is not new.

I claim—

In an electric-arc lamp, the combination of the two carbons A B with the tubes C D, applied to direct, respectively, a gas and an air jet between the points of the carbons, substantially as described.

LEDYARD COLBURN.

Witnesses:

JOHN E. EARLE,

JOS. C. EARLE.

(No Model.)

A. APPS.

ELECTRIC ARC LAMP.

No. 438,134. Patented Oct. 14, 1890.

FIG.1.

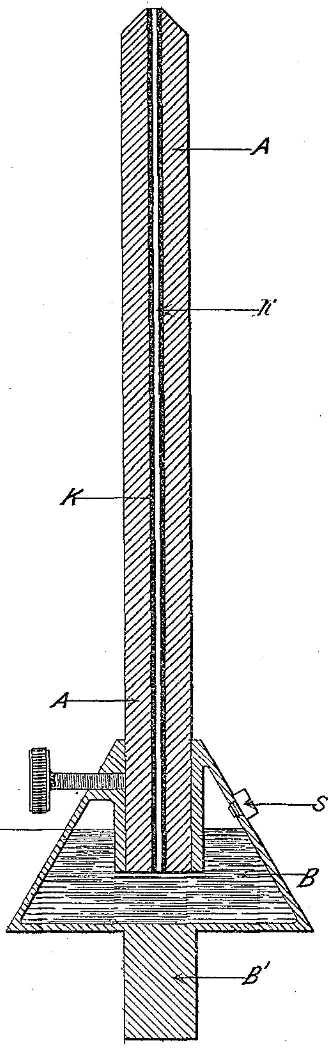

FIG.2.

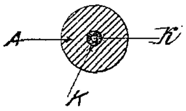

Witnesses:
Wm Allan Andrew.
Ernest C. Barker,

Inventor:
Alfred Apps
by Fairfax & Wetter
Attorneys

THE NORRIS PETERS CO., PHOTO-LITHO., WASHINGTON, D. C.

UNITED STATES PATENT OFFICE.

ALFRED APPS, OF LONDON, ENGLAND.

ELECTRIC-ARC LAMP.

SPECIFICATION forming part of Letters Patent No. 438,134, dated October 14, 1890.

Application filed June 17, 1890. Serial No. 355,790. (No model.)

To all whom it may concern:

Be it known that I, ALFRED APPS, a subject of the Queen of England, residing at 433 Strand, London, in the county of London, England, have invented certain new and useful Improvements in Electric-Arc Lamps, of which the following is a specification.

My invention has for its object to increase the intensity, improve the color, and augment the steadiness of the electric-arc light obtainable from a given amount of energy.

I am aware that for this purpose hydrocarbon vapors have been conducted through the interior of the carbon, and that a special method of using hydrocarbon vapors and preventing the stoppage of the bore-hole through which the vapors pass consists in inserting a wick made of asbestus. I have discovered, however, that no wick is necessary for keeping the bore-hole open and allowing the hydrocarbon vapor to pass.

Instead of using a wick I line the bore-hole of the carbon with a suitable insulating (otherwise refractory) material—such as kaolin, lime, plaster-of-paris, vitreous paint, japan, stone, or earthenware—so as to form a thin capillary tube, which varies in size with the size or length of the carbon, and which in the case of ordinary carbons has from one-hundredth to one-fiftieth of an inch clear width or diameter for the passage of the vapors. The cross-section of the vapor duct or tube may be circular or of other suitable shape. In making this capillary tube or lining the lime, plaster, or other mineral matter is introduced in a plastic condition, so that it adheres readily to the interior of the carbon, and a thin wire or other core is inserted and afterward withdrawn in order to preserve the necessary aperture. As the tube or lining is very thin, and therefore the quantity of mineral matter very small, it burns or falls away in proportion as the carbon is consumed, thus keeping the hole open for the easy passage of the vapors from the lower parts of the carbon or from the vessel containing oil or other source of hydrocarbon vapor.

Another object of the lining or tube is to prevent the deposit of carbon from the vapor on the walls of the passage, which deposit would form an obstruction to the flow of vapors.

In the further description reference will be made to the accompanying drawings, in which—

Figure 1 is a vertical section, and Fig. 2 a cross-section, of a carbon embodying my invention.

The carbon A is fitted into a vessel B, containing oil up to the level C, which oil ascends by capillary attraction through the small axial perforation *k*. This passage *k* is formed by the tube or lining K, of kaolin, plaster-of-paris, or other suitable refractory material. B′ is a brass rod or tube, by means of which the vessel B can be fixed in the lamp-holder. The part B may, however, be placed in any other convenient position.

The vessel is provided with an opening, which can be plugged by a screw S, and serves to admit air to the interior when required.

Instead of using a vessel B, the hydrocarbon oil may be supplied by a separate reservoir placed in any suitable position and connected with the inlet end of the carbon by a wick.

What I claim is—

A carbon for electric-arc lamps, having an axial perforation provided with a lining or tube adapted to supply liquid by capillary attraction, substantially as described.

In testimony whereof I have signed this specification in the presence of two subscribing witnesses.

ALFRED APPS.

Witnesses:
J. WETTER,
ERNEST C. BARKER.

(No Model.)

W. S. RICHARDS.

ARC LAMP ELECTRODE.

No. 458,376. Patented Aug. 25, 1891.

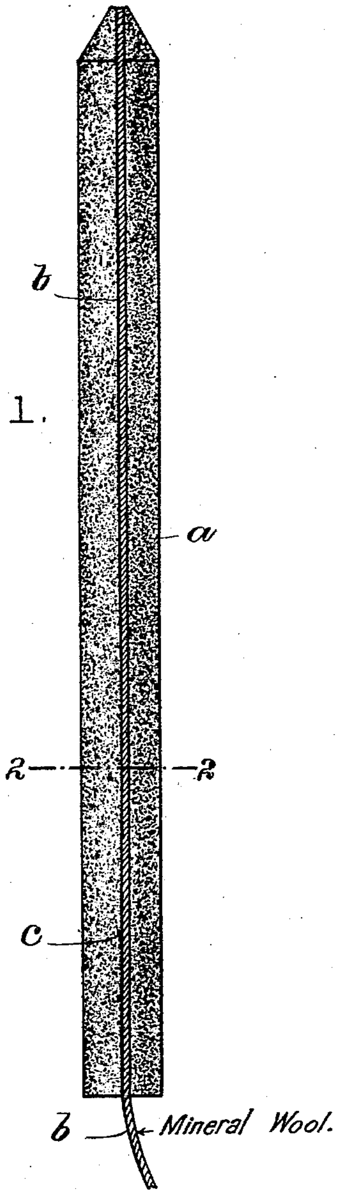

Fig. 1.

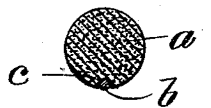

Fig. 2.

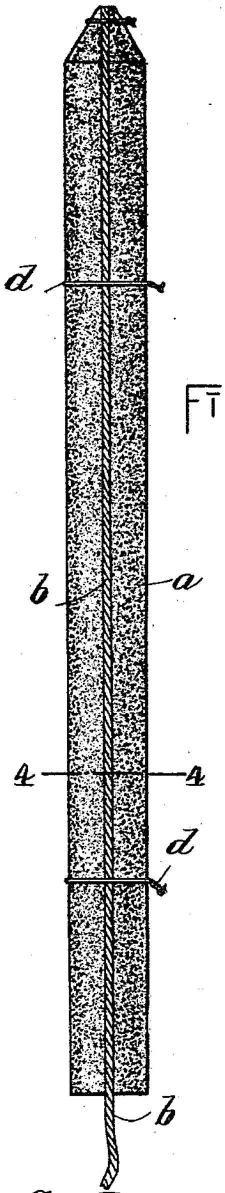

Fig. 3.

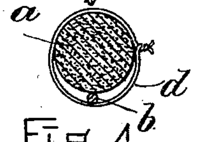

Fig. 4.

WITNESSES.

R. Henry Marsh

Erving W. Hamlin

INVENTOR.

W. S. Richards

by Wright Brown & Crossley

Attys.

THE NORRIS PETERS CO., PHOTO-LITHO., WASHINGTON, D. C.

UNITED STATES PATENT OFFICE.

WALTER S. RICHARDS, OF NATICK, ASSIGNOR OF ONE-HALF TO GEORGE B. JAMES, OF BOSTON, MASSACHUSETTS.

ARC-LAMP ELECTRODE.

SPECIFICATION forming part of Letters Patent No. 458,376, dated August 25, 1891.

Application filed January 8, 1891. Serial No. 377,143. (No model.)

To all whom it may concern:

Be it known that I, WALTER S. RICHARDS, of Natick, in the county of Middlesex and State of Massachusetts, have invented certain new and useful Improvements in Electrodes for Arc Lamps, of which the following is a specification.

This invention relates to carbon electrodes for arc lamps which are provided with capillary conductors of refractory material adapted to conduct a liquid hydrocarbon to the arc or burning end of the electrode, where said hydrocarbon is converted into gas, which intensifies and improves the quality of the light. Carbon electrodes to which this principle is applied have heretofore been made hollow or tubular, each electrode having a central longitudinal passage entirely surrounded by the material of the electrode and containing a capillary conductor of refractory material, such as asbestus, said conductor extending through the center of the burning end of the electrode at a point where the heat attending the production of the illuminating arc is the greatest. Two serious objections attend this construction of the electrode, namely: first, the capillary conductor being entirely surrounded by the burning mass of carbon is so acted on by the intense heat that it soon becomes entirely consumed and rendered useless for a considerable distance into the body of the electrode, and therefore fails to conduct the hydrocarbon or other agent into the necessary proximity to the arc to give the desired increased illumination; second, the hydrocarbon passing through the capillary conductor being entirely surrounded by the material of the electrode has no access to the atmosphere until it reaches the arc, so that it does not assume a gaseous form as readily and rapidly as it would do if the air had freer access to the hydrocarbon passing through the capillary conductor.

My invention has for its object to overcome the above-mentioned objections; and to this end it consists in a carbon electrode having a capillary conductor of refractory material arranged at the exterior or the electrode and extending lengthwise thereof, the said capillary conductor being exposed along its entire length to the atmosphere, so that it is not attacked and destroyed by the heat, excepting at the immediate point where the arc is formed, and exposes the hydrocarbon conducted thereby to the action of the air to such an extent that the conversion of the hydrocarbon into gaseous form is more rapid than it would be if the capillary conductor were entirely surrounded by the material of the electrode, as heretofore.

In the accompanying drawings, forming a part of this specification, Figure 1 represents a side view of a carbon electrode and a capillary conductor thereon, the electrode having in its surface a longitudinal groove, which receives the capillary conductor or a portion thereof and retains the same in place, at the same time exposing it to the atmosphere. Fig. 2 represents a section on line 2 2 of Fig. 1. Fig. 3 represents a side view of an electrode having the capillary conductor placed upon its surface instead of in a groove and secured by external fastenings. Fig. 4 represents a section on line 4 4 of Fig. 3.

The same letters of reference indicate the same parts in all the figures.

In the drawings, *a* represents a carbon electrode of the general form ordinarily used in electric-arc lamps, and *b* represents a capillary conductor or wick of any suitable refractory material, such as mineral wool. The said capillary conductor extends the entire length of the electrode, and preferably projects beyond the end of the same opposite the end where the arc is formed so that it may enter a suitable reservoir containing a liquid hydrocarbon.

My invention, as above indicated, is carried out by locating the capillary conductor *b* upon the exterior of the electrode, so that its entire length will be exposed to the atmosphere instead of being surrounded by the material of the electrode, as heretofore.

In Fig. 1 I have shown the capillary-conductor located in a shallow longitudinal groove *c* in the surface of the electrode, said groove receiving the capillary conductor, but not excluding the air therefrom. The object of the groove is simply to retain the capillary conductor in place, and this may be accomplished my making the conductor of such size that it requires to be compressed to enter the groove, or the conductor may be fastened by any suitable means to the surfaces of the groove.

In Figs. 3 and 4 I show the conductor *b* as bearing on the surface of the electrode, no grooves being provided in the latter. In this case the conductor may be held in place by independent fastening *d d*, which are here shown as pieces or bands of wire. These fastening will be readily consumed by the electric action when the electrode burns down to the point where they are located. It will be seen that by locating the conductor *b* at the exterior of the electrodes the conductor is so exposed to the atmosphere that it cannot be destroyed by the heat at a point far enough from the arc to prevent the hydrocarbon gas carried by the conductor from properly entering the arc. It will also be seen that the free access of the atmosphere to the conductor *b* facilitates the conversion of the liquid hydrocarbon into gaseous form.

I claim—

1. An electrode having a capillary conductor of refractory material extending along its exterior, said conductor being exposed to the atmosphere, as set forth.

2. A carbon electrode having an open longitudinal groove in its surface, combined with a capillary conductor of refractory material contained in said groove and exposed to the atmosphere, as set forth.

In testimony whereof I have signed my name to this specification, in the presence of two subscribing witnesses, this 2d day of January, A. D. 1891.

WALTER S. RICHARDS.

Witnesses:

EWING W. HAMLEN,
C. F. BROWN.

(No Model.)

L. HULIN.

MANUFACTURE OF CARBON BLOCKS.

No. 473,841. Patented Apr. 26, 1892.

Fig. 1.

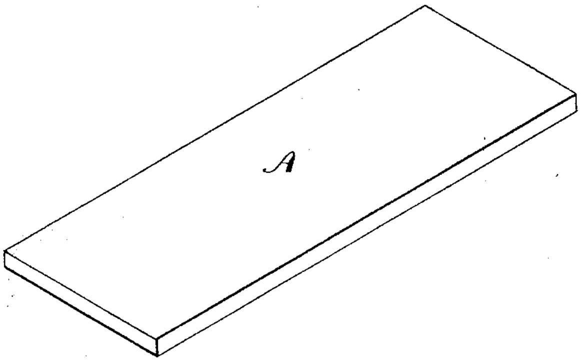

Fig. 2.

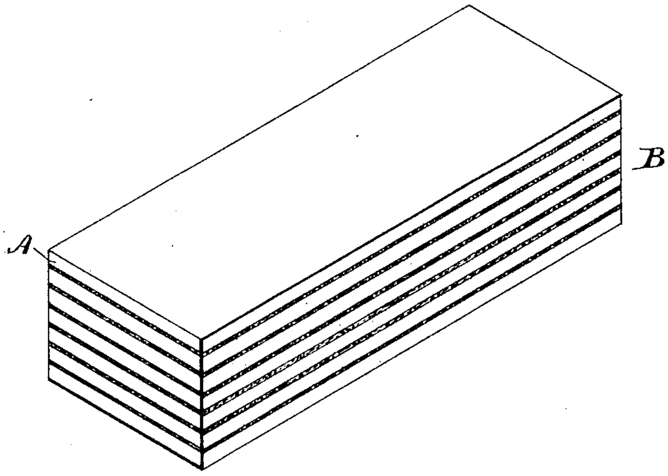

WITNESSES:

Francis Crouch

Claire M Puffer

INVENTOR:

Léon Hulin

by ATTY.

THE NORRIS PETERS CO., PHOTO-LITHO., WASHINGTON, D. C.

UNITED STATES PATENT OFFICE.

LÉON HULIN, OF FROGES, FRANCE, ASSIGNOR TO GROSVENOR P. LOWREY, OF NEW YORK, N. Y.

MANUFACTURE OF CARBON BLOCKS.

SPECIFICATION forming part of Letters Patent No. 473,841, dated April 26, 1892.

Application filed April 23, 1890. Serial No. 349,193. (No model.) Patented in France November 7, 1889, No. 201,784.

To all whom it may concern:

Be it known that I, LÉON HULIN, a citizen of the Republic of France, residing at Froges, Department of Isere, France, have invented a new and useful Improvement in the Process for the Manufacture of Carbon Blocks, (for which I have obtained Letters Patent of the Republic of France, No. 201,784, dated November 7, 1889,) of which the following is a specification.

My invention relates to a new process for manufacturing "blocks of carbon," and by this term I mean articles of any desired size and configuration, which process has been found to do away with many of the difficulties attendant upon the use of the masses of carbon of any considerable size when made by the methods commonly employed.

Inasmuch as the making of electrodes for use in electro-metallurgical and electro-chemical operations is the field for which my invention was primarily devised and in which it will be most likely to be put into immediate commercial use, the following specification treats more particularly of this specific application of my invention, though I desire it to be understood that the invention is in no way limited to the making of electrodes alone; but, on the contrary, may be availed of in the manufacture of carbon conductors, crucibles, molds, or other articles, all of which are intended to be covered by my claims.

The general nature of my invention may be outlined by observing that I prepare separately a number of plates or laminæ of carbonaceous material, from which I build up the desired block, putting an intermediate coating of agglomerating material between the plates, and finally I bake the built-up block in any suitable form of furnace.

My invention is illustrated in the accompanying drawings, wherein—

Figure 1 is a perspective view of a single one of the plates or laminæ, and Fig. 2 is a similar view showing a completed electrode.

I first take pieces of retort-carbon or petroleum-coke or any other preferred form of carbon and I pulverize them in a crusher. The pulverized carbon is then passed through a grinder and the dust is dried and mixed thoroughly with gas-tar automatically sprinkled over the carbon in definite proportions, by weight. The paste is then molded and rolled into plates, which are trimmed to the required shape and dimension and then dried by exposure to the open air and subsequently in a heated chamber. These various steps are all well known in the art of carbon-making as now practiced, and I refer to them not as a part of my invention, but simply to illustrate a suitable way in which to prepare the carbon plates or laminæ with which my invention deals. These plates will of course be made of various shapes and sizes, according to the configuration of the article which it is desired to form, and one of them suitable for an electrode is illustrated at A, Fig. 1. The plates A have the same superficial dimensions as the desired electrode. They are taken from the drying-chamber when they have become stiff and fragile, but not sonorous, and are then coated with a thick layer of the agglomerating substance, generally consisting of a composition of seventy per cent. hot tar and thirty per cent. carbon dust, the application of this composition being made to one side or surface only of said carbon plates. The plates thus coated are then fitted upon one another and accurately adjusted, so as to form an electrode B, Fig. 2, of the required shape. When thus joined together, the electrode or other built-up carbon block is inserted into a cast-iron crucible, which is then put into a furnace, in which the temperature is gradually raised for about eighteen hours, when it is allowed to cool gradually, the maximum heat of the furnace being about a bright red heat of iron. The carbon produced in this way is specially adapted to withstand exposure to an extreme heat, such as is found in the electric furnaces used for smelting aluminous and other ores. When carbon blocks as ordinarily made are used for the electrodes in such furnaces, they break or shatter and pieces fall to the bottom of the crucible, producing short circuits, which can only be interrupted by stopping the dynamo or otherwise breaking the circuit, and thereby stopping the operation of reduction in order to pick out the broken pieces of carbon. This result is chiefly due to the fact that when a large piece of carbon is exposed to the high heat of the furnace there will be such a difference of temperature between the center and outside portions of the mass as will produce very unequal expansion therein, so that as the elasticity of the carbon is small and its expansibility under heat considerable it has been found that large blocks of carbon made solid are not well adapted to resist intense heat. Carbon blocks or electrodes, however, made by my present invention have the same liberty of expansion as when the electrode is formed of a number of plates mechanically bound together and at the same time have not the effect of non-homogeneity, which very often produces electric arcs between the plates, bad contacts, and resistances, all of which tend not only to weaken the current, but also to make the plate break. Furthermore, it is found that a very considerable and important economy results from the use of carbon electrodes constructed as above indicated in all electro-metallurgical processes conducted on a commercial scale, principally owing to the fact that said blocks of carbon conduct the current perfectly well without any noticeable heating of any part of the mass, thereby indicating a materially less resistance than in any mass of carbon of equal size constructed in any other method of which I am aware.

I claim as my invention—

1. The herein-described process of making articles of carbon, which consists in shaping and preparing ready for baking separately a number of comparatively small plates or blocks of carbon, building up the desired article from such plates while still unbaked, and then baking the article thus formed, as described.

2. The herein-described process for forming a carbon electrode, which consists in shaping from carbon paste and preparing ready for baking separately a number of plates or blocks of carbon of comparatively small size, fitting such plates together with a suitable agglomerating material to form an electrode of the desired dimensions, and baking the electrode thus formed, as set forth.

3. A carbon conductor consisting of a number of separately-prepared carbon plates or slabs fitted together and baked, substantially as described.

LÉON HULIN.

In presence of—
OSCAR MALMROS,
HASTINGS BURROUGHS.

No. 655,176.

Patented Aug. 7, 1900.

J. F. ACKERMANN.

ELECTRIC ARC LAMP.

(Application filed Oct. 20, 1899.)

(No Model.)

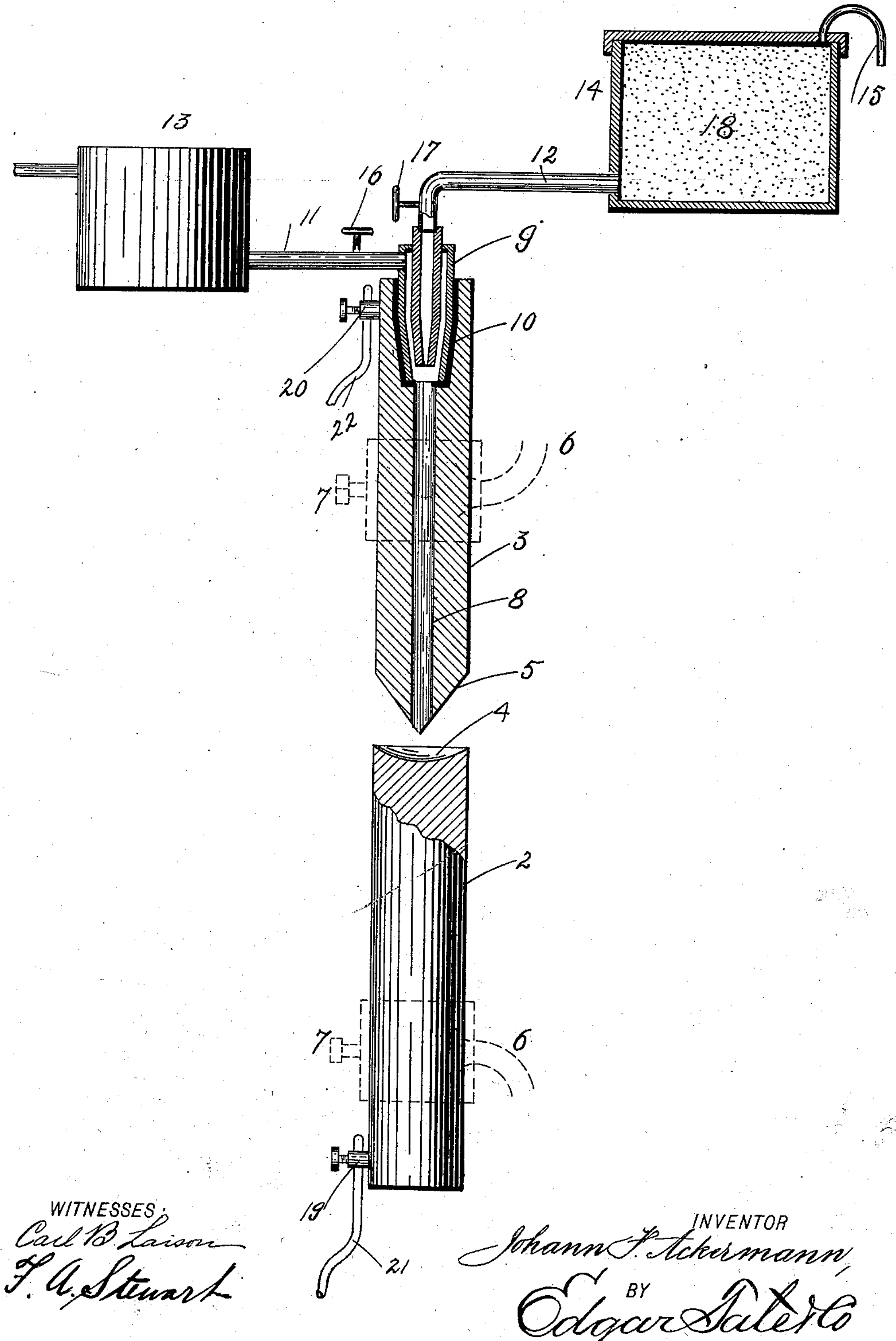

WITNESSES:

Carl B. Larson

F. A. Stewart

INVENTOR

Johann F. Ackermann,

BY

Edgar Tate & Co

ATTORNEYS

THE NORRIS PETERS CO., PHOTO-LITHO., WASHINGTON, D. C.

UNITED STATES PATENT OFFICE.

JOHANN FRIEDRICH ACKERMANN, OF NEW YORK, N. Y.

ELECTRIC-ARC LAMP.

SPECIFICATION forming part of Letters Patent No. 655,176, dated August 7, 1900.

Application filed October 20, 1899. Serial No. 734,168. (No model.)

To all whom it may concern:

Be it known that I, JOHANN FRIEDRICH ACKERMANN, a citizen of the United States, residing at New York, (Brooklyn,) in the county of Kings and State of New York, have invented certain new and useful Improvements in Electric-Arc Lights, of which the following is a full and complete specification, such as will enable those skilled in the art to which it appertains to make and use the same.

This invention relates to arc-lamps; and the object thereof is to provide a lamp of this class which shall be economical and efficient in use and which shall be capable of long-continued operation without attention or replenishment of material, and is especially adapted for lighthouse and search-light use.

My invention is fully disclosed in the following specification, of which the accompanying drawing forms a part, in which the several parts are denoted by reference characters and which represents a side elevation of my improved arc-lamp partly sectioned to display the internal construction of several novel portions thereof.

Referring more particularly to the drawing, I have shown at 2 the negative pole member and at 3 the positive pole member of my improved arc-lamp, each of which consists of a stick or rod formed of material adapted to conduct a current of electricity, such as very hard carbon or chalk or similar material. The negative member 2 is provided at its upper end with a crater or recess 4, the positive member being pointed at its lower end, as at 5.

The members 2 and 3 may be supported by any suitable means, as by a bracket 6, (shown in dotted lines,) provided with a set-screw 7. The positive member 3 is longitudinally chambered, as at 8, and an ejector device 9 of any ordinary or suitable construction enters the rear end of the chamber 8, said ejector being insulated from the member 3, as shown at 10. From the air-blast channel and feed-channel of the ejector extend pipes 11 and 12, respectively, to a compressed-air reservoir or air-compressor (represented at 13) and a reservoir for containing pulverized carbon, (represented at 14.) The reservoir 14 may be provided with an air-inlet, as at 15, to facilitate the feed of the pulverized carbon by action of the ejector. The ejector connections 11 and 12 have the usual valves or cocks, as at 16 and 17, for regulating the operation.

The fuel-receptacle 14 is normally filled with pulverized fuel (represented at 18) consisting of granules or small particles of carbonaceous material or other substance capable of combustion when passed within the sphere of influence of an electric arc. Pulverized carbon of the grade used in arc-lights as generally constructed will be effective for the purpose just stated. I may, however, use magnesium or other powder to obtain color effects.

The positive and negative members 3 and 2 are connected in circuit in any suitable manner—for instance, by binding-posts 19 and 20, with which line-wires 21 and 22 are respectively connected. The members 2 and 3 are spaced apart sufficiently to form an arc between the same, as shown in the drawing, and when they are in circuit it is only necessary to operate the ejector mechanism, so that the air-blast will draw the pulverized fuel 18 from the reservoir 14 and eject it through the chamber or bore 8 to the space between the members 2 and 3, where the electric arc will at once superheat and consume said fuel.

It is manifest that the exact construction and arrangement of the elements of my improved arc-lamp as above set forth are not essential to the embodiment of my invention; but that I may vary the same widely and still come within the spirit and scope of my improvements.

By means of my improved arc-lamp a disintegration of the two members 2 and 3 is largely avoided. It is manifest that said members may be constructed to last in operation a greater length of time than the present arc-light carbons, as the heat of the arc expends itself upon the pulverized fuel, and as the continuous feed of a larger quantity of fuel may be maintained no attention will be required by my improved lamp for considerable time. It is further manifest that all the fuel is made use of in my improved lamp, which produces economy of operation, and the amount of fuel admitted to the zone of the arc may be readily varied by adjustment of the ejector.

Any suitable means of actuating the members 2 and 3 to make, maintain, and break the arc between the same may be employed, such forming no part of my invention.

Having fully described my invention, I claim as new and desire to secure by Letters Patent—

1. In an arc-lamp, a negative pole member and a positive pole member, one of which is recessed at one end and the other pointed at one end and chambered longitudinally, an ejector communicating with said chamber, a fuel-receptacle arranged to communicate with said ejector, a source of compressed-air supply communicating with said ejector, and devices for regulating the feed of the fuel to the ejector, substantially as shown and described.

2. In an arc-lamp, a negative pole member and a positive pole member, one of which members is chambered longitudinally, an ejector communicating with said chamber, a fuel-receptacle arranged to communicate with said ejector, means communicating with said ejector for forcing said fuel through said chamber in said pole member, and devices for regulating the feed of the fuel to the ejector, substantially as shown and described.

3. In an arc-lamp, a negative pole member and a positive pole member, one of which is chambered longitudinally, an ejector communicating with said chamber, a fuel-receptacle arranged to communicate with said ejector, and provided with a quantity of pulverized carbon or analogous material, and means communicating with said ejector for forcing said pulverized carbon or analogous material through said chamber, and devices for regulating the feed from said fuel-receptacle, substantially as shown and described.

In testimony that I claim the foregoing as my invention I have signed my name, in presence of the subscribing witnesses, this 10th day of October, 1899.

JOHANN FRIEDRICH ACKERMANN.

Witnesses:
F. A. STEWART,
V. M. VOSLER.

S. P. WILBUR.

ELECTRODE FOR ARC LAMPS.

APPLICATION FILED APR. 28, 1906.

931,169. Patented Aug. 17, 1909.

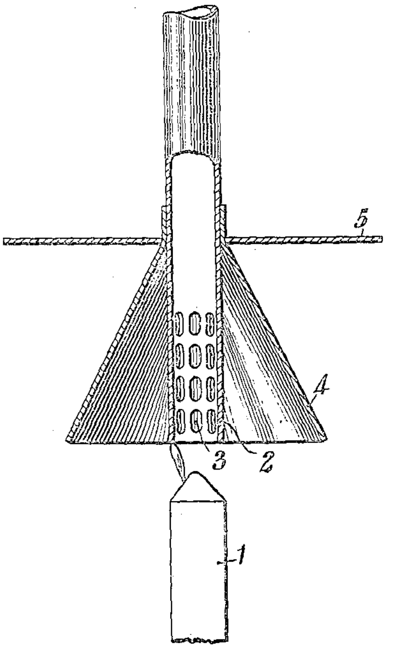

WITNESSES:

C. L. Belcher

Otto S. Schairer

INVENTOR

Samuel P. Wilbur

BY

Wesley G. Carr

ATTORNEY

UNITED STATES PATENT OFFICE.

SAMUEL P. WILBUR, OF WILKINSBURG, PENNSYLVANIA, ASSIGNOR TO WESTINGHOUSE ELECTRIC & MANUFACTURING COMPANY, A CORPORATION OF PENNSYLVANIA.

ELECTRODE FOR ARC-LAMPS.

No. 931,169. **Specification of Letters Patent.** **Patented Aug. 17, 1909.**

Application filed April 28, 1906. Serial No. 314,207.

To all whom it may concern:

Be it known that I, SAMUEL P. WILBUR, a citizen of the United States, and a resident of Wilkinsburg, in the county of Allegheny and State of Pennsylvania, have invented a new and useful Improvement in Electrodes for Arc-Lamps, of which the following is a specification.

My invention relates to arc lamps and particularly to lamps in which the arc is of the character commonly known as "flaming" or "luminous."

The object of my invention is to provide an electrode for an arc lamp of the character specified which shall enable starting or lighting thereof and removal of the fumes produced by the arcs.

Arc lamps have heretofore been provided in which one of the electrodes is composed of a metal and is substantially non-consumable, and the other of which is composed of a material, or a mixture of materials, that is more highly refractory than carbon, or other materials commonly employed, and that is, consequently, much less rapidly consumed. Electrodes which have been found suitable in practice have been variously composed of titanium carbid, or mixtures of metallic titanium and carbon, titanium oxid and carbon, and various other compositions. In the operation of such a lamp a slag is formed upon the end of the composition electrode, which becomes a non-conductor when cold and which often interferes with starting of the lamp after it has once been in use. Fumes are also given off by such lamps which form deposits upon the electrodes and other parts, often in such a manner as to obscure more or less of the light and to interfere with the operation of the lamp.

According to the present invention, I propose to construct the metallic or non-consumable electrode in the form of a tube, the inner diameter of which is less than the diameter of the other electrode, so that, when the electrodes are brought together, the tube will cut the slag and permit electrical contact between them, the tube also serving as a chimney through which the fumes may be conveyed from the lamp by means of the draft set up by it.

The figure of the accompanying drawing is a view, partially in section and partially in elevation of the electrodes of a lamp that embody my invention.

Lower electrode 1 of an arc lamp to which my invention may be conveniently applied may be composed, as before described, of titanium carbid or of mixtures of titanium oxid and carbon, metallic titanium and carbon or of other suitable substances that are highly refractory and that impart a "flaming" or "luminous" character to the arc. Upper electrode 2, which is preferably composed of copper but which may also be composed of iron or other suitable metal or metals, is tubular in form and its inner diameter is less than the outer diameter of the electrode 1. It will be understood that when the electrodes are brought together, in the usual manner, to start the arc the tubular electrode will cut or break any insulating slag that may have been formed on the other electrode. The tube also serves as a chimney through which fumes that are given off by the arc may be conveyed to the exterior of the lamp by means of the draft set up by the lamp. In order, however, to insure removal of all the fumes in this manner, the lower end of the tube is provided with a plurality of apertures at 3, and is surrounded by a conical shaped hood 4 that collects the fumes and directs them into apertures. An annular flange 5 is also secured to the tube at the upper end of the hood which facilitates the radiation of heat from the electrode.

The structural details of the tubular electrode may differ considerably from what I have specifically shown and described, and it may be employed with composition electrodes the characteristics of which may differ widely from those here described without departing from the spirit of the invention.

I claim as my invention:

1. A tubular arc lamp electrode of uniform diameter from end to end and provided with lateral apertures adjacent to one end and with a hood that surrounds the apertured end.

2. A tubular upper electrode for arc lamps having open ends and a plurality of side apertures adjacent to its lower end.

3. A tubular arc lamp electrode of uni-

form diameter from end to end and having open ends and a plurality of side apertures adjacent to its arcing end.

4. A tubular arc lamp electrode of uniform diameter from end to end and provided with side apertures adjacent to one of its ends and with a flaring hood that surrounds the apertured end.

5. A tubular arc lamp electrode provided with side apertures adjacent to its lower end and with a flaring hood that surrounds said apertures.

6. A tubular arc lamp electrode having open ends and provided with a flaring hood that surrounds said electrode adjacent to one of its ends.

In testimony whereof, I have hereunto subscribed my name this 21st day of April, 1906.

SAMUEL P. WILBUR.

Witnesses:
BURT BAY,
BIRNEY HINES.

A. D. JONES.

ELECTRIC ARC LAMP.

APPLICATION FILED SEPT. 16, 1907.

935,518. Patented Sept. 28, 1909.

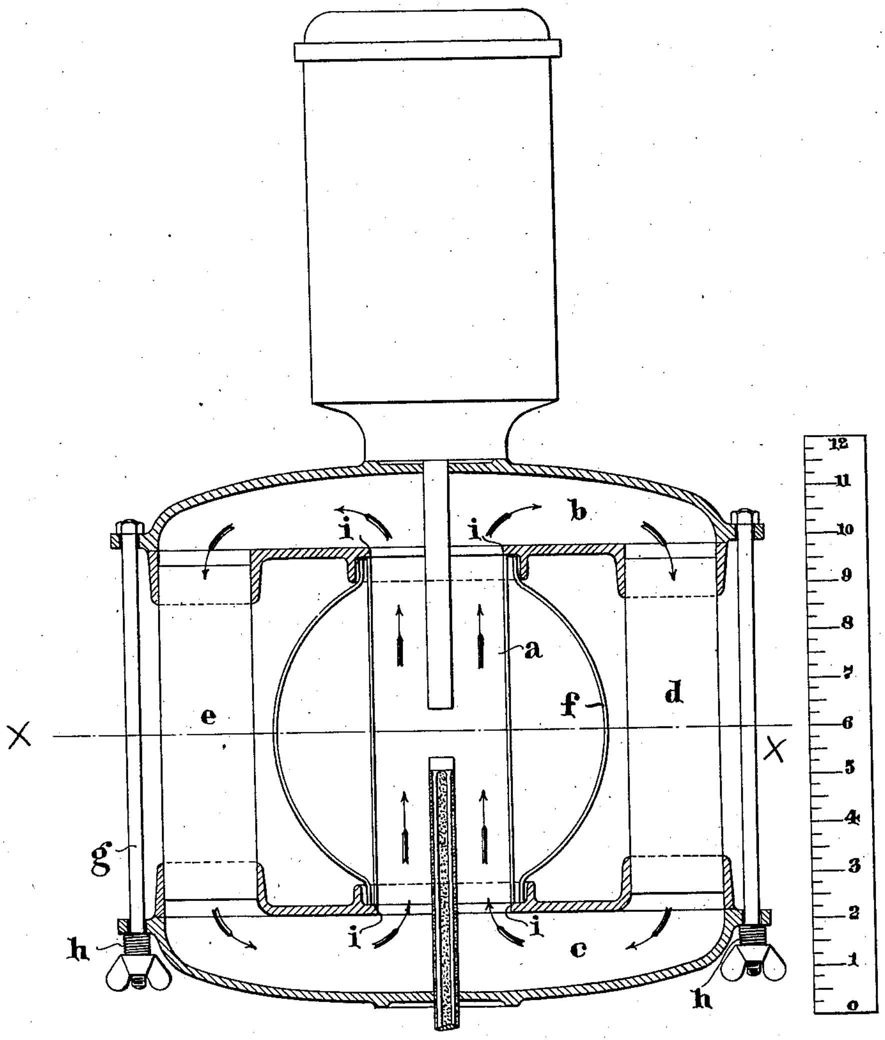

Fig.1.

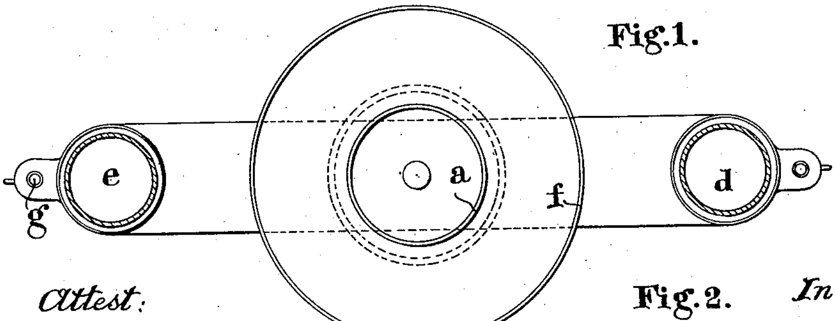

Fig.2.

Attest:
Fred L. Folson
Edward N. Sarton

Inventor,
Adrian D. Jones
By Spear, Middleton, Donaldson & Spear,
Atty's.

Jan. 2, 1923. 1,440,724.

C. W. SÖDERBERG.

ELECTRODE FOR ELECTRIC FURNACES AND PROCESS FOR MANUFACTURING THE SAME.

FILED SEPT. 8, 1919.

Fig.1.

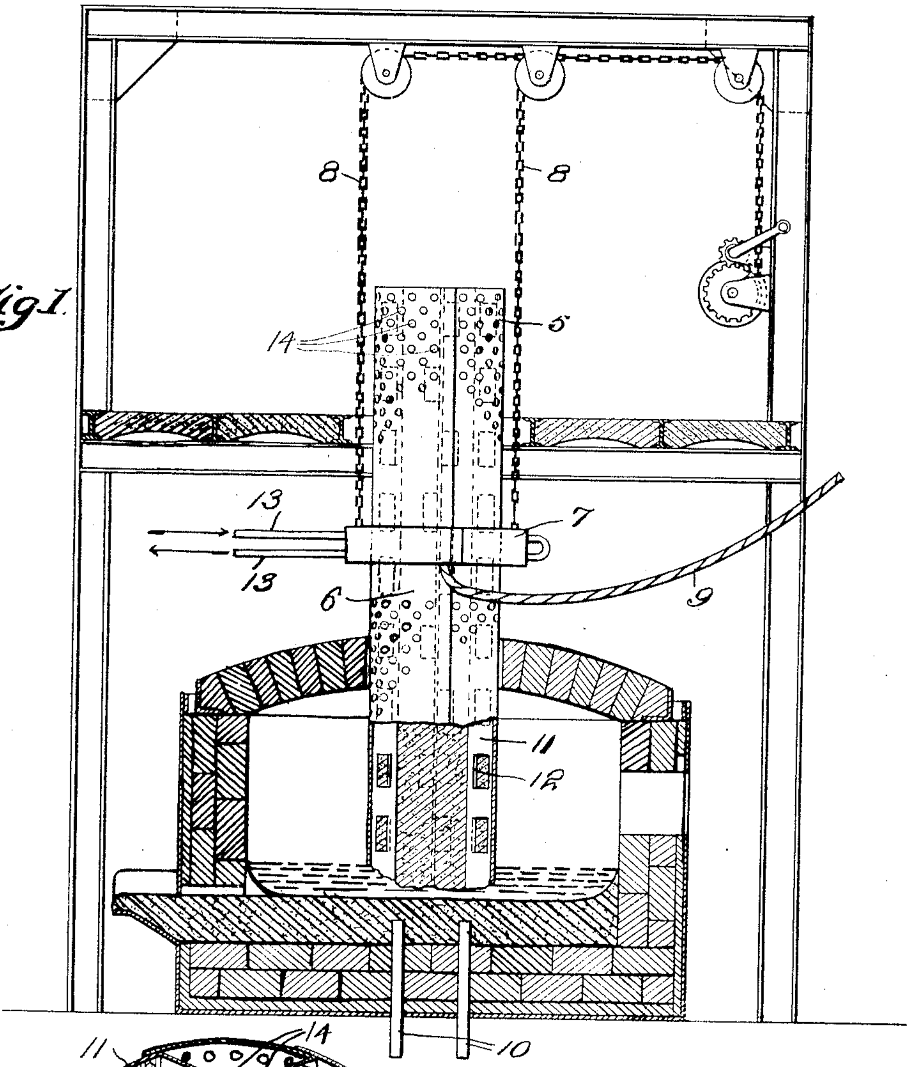

Fig.2.

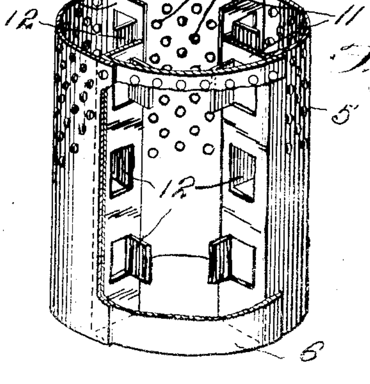

Inventor
Carl Wilhelm Söderberg

By Dorsey & Cole
Attorney

Patented Jan. 2, 1923. **1,440,724**

UNITED STATES PATENT OFFICE.

CARL WILHELM SÖDERBERG, OF CHRISTIANIA, NORWAY, ASSIGNOR TO DET NORSKE AKTIESELSKAB FOR ELEKTROKEMISK INDUSTRI, OF CHRISTIANIA, NORWAY.

ELECTRODE FOR ELECTRIC FURNACES AND PROCESS FOR MANUFACTURING THE SAME.

Application filed September 8, 1919. Serial No. 322,480.

To all whom it may concern:

Be it known that I, CARL WILHELM SÖDERBERG, a subject of Norway, and a resident of the city of Christiania, Kingdom of Norway, have invented certain new and useful Improvements in the Electrodes for Electric Furnaces and Processes of Manufacturing the Same, of which the following is a specification.

This invention relates to electrodes for electric furnaces and the object of the invention is an improved electrode, and a method whereby the same may be produced in a simple and economical manner.

Electrodes for the purpose above mentioned are generally made from some carbonaceous material, such as coal, graphite, etc. The material or materials selected are reduced to the desired fineness and mixed with a suitable binder, such as tar or pitch. The mixture is then moulded to the desired form and baked in a furnace until the volatile matter is driven off, and the electrode has the desired density and conductivity.

In a prior U. S. patent application (Serial Number 205,416 filed December 4, 1917) I have disclosed a method for manufacturing electrodes whereby the raw electrode mass is tamped or moulded around one or more iron bars, and subsequently baked by heat electrically generated in the iron bars together with the heat from the electric furnace in which the electrode is used. My present invention is a modification of the process described in the above application, although the broad features thereof are present herein.

According to my present method electrodes are manufactured by tamping or pressing a suitable electrode mass into a metallic mantle. The mantle serves as a mould and protects the electrode from oxidation during the heating process. By employing a metallic mantle—preferably of iron—a further advantage is gained in that such a mantle can carry up to 4 amperes per square millimeter without excessive heating, while an iron rod or core can carry only 1.5–2 amperes per square millimeter. This may be explained by the well known fact that an electric current will be distributed very irregularly in an iron rod. In the centre of the rod the current density will be small, while near its exterior surface it will be great.

The raw electrode made in accordance with my process may be baked to a comparatively low temperature, for instance 600–800° C. before it is mounted in the electric furnace in which it is to be used. I prefer, however, to carry out the entire baking process in the electric furnace and to produce the electrode continuously by adding sections of the mantle and tamping in raw electrode mass when necessary as the electrode is consumed.

Where the electrode is wholly produced in the furnace in which it is employed, the baking of the electrode is effected in part by the heat electrically generated in the electrode itself and in part by the heat from the melting crater. Current is supplied to the electrode and to the furnace initially through the mantle and as the raw electrode material becomes baked and its conductivity increased it carries current and the electrode eventually operates like a prebaked electrode. The electrode comprising the electrode mass and the enclosing mantle is fed into the furnace as its lower or operating end is consumed. The mantle in the preferred form serves not only as a conductor and as a protection for the electrode mass but also as a mechanical means of retaining and supporting the same.

In certain character of work and of electrode furnace a difference in the coefficients of expansion of the mantle and electrode mass becomes a factor which must be provided for and this invention contemplates such provision where necessary.

The preferred type of electrode is shown diagrammatically in the accompanying drawings which form a part of this application but which it is to be understood are for illustrative purposes only, and no undue limitation is to be deduced therefrom. In these drawings Fig. 1 is a vertical cross section of an electric furnace, employed in certain metallurgical processes, with the electrode mounted for manufacture and operation therein, the electrode being broken away; and Fig. 2 is a perspective of a section of the metallic mantle.

The electrode 5 comprises a metallic mantle 6 filled with carbonaceous material.

It is supported in the furnace by an electrode holder 7 by means of a chain lift 8 so that its position in the furnace may be regulated. Current is supplied to the holder, and thence to the electrode, by means of a flexible conductor 9. The return circuit is illustrated as made through the lower electrode or conductor 10.

The mantle 6 is built up of sections, such as illustrated in Fig. 2, suitably fastened together. It is made with internally extending ribs 11 which are provided with projections 12. These ribs and projections afford means of distributing current in the carbonaceous material and act as a mechanical support therefor to prevent slipping of the carbonaceous material in the mantle. The support thus afforded is sufficiently elastic to provide for the difference in expansion between the mantle and the carbonaceous material. This factor is also taken care of in part by water-jacketing the electrode holder 7, water pipes 13 being supplied for this purpose. The mantle 6 is further preferably perforated as at 14 so that gases produced by the baking may escape without deforming the mantle.

The mantle is made of sheet metal, usually of sheet iron. I have found that for an electrode having a diameter of 600 millimeters and carrying an electric current of 15,000 amperes, a mantle made of sheet iron 1 to 1.3 millimeters in thickness gives satisfactory results.

In the production of the electrode the carbonaceous material, mixed with a suitable binder such as tar or pitch, is tamped or pressed into the mantle, which conveniently extends into what is commonly called a tamping house located above the furnace and so far as practical heat insulated therefrom. In starting the electrode it is preferable to place a layer of conductive material such as coke in the furnace at the bottom of the electrode. This serves as a suitable resistance between the electrode and its return circuit during the preliminary heating of the furnace and electrode. The current is then applied, and the baking of the electrode is started by the heat electrically generated in the mantle and its ribs and by the heat developed in the coke. The lower end of the electrode soon becomes baked and the temperature of the furnace rises. When the furnace has reached the desired working temperature the charge is added gradually. As the temperature of the furnace increases, baking of the electrode progresses, due in part to the heat from the melting crater, and extends upwardly in the electrode to a distance depending upon the temperature of the furnace and other local conditions.

In producing the electrode continuously in the furnace in which it is employed, sections of the mantle are suitably fastened to the top of the mantle of the electrode as by welding or riveting and are filled with fresh electrode mass in the tamping house. The electrode holder is moved upwardly on the mantle of the electrode as is necessary and the baking continues as above described.

As above indicated if desired the electrode may be partially baked before it is placed in the electric furnace in which it is to be used, the comparatively low temperatures of 600° to 700° C. above stated being employed. The partially baked electrode mass will then be sufficiently strong to withstand the elongation of the mantle which takes place when the electrode is subjected to the higher temperatures of the electric furnace. This prior baking thus takes care of the difference in expansion between the mantle and the carbonaceous matrial without the use of the elastic contact between the two described in connection with the preferred form of this invention.

This same result may be also accomplished when the electrode is produced in the furnace in which it is to be employed, by providing sufficient cooling to keep the mantle at a comparatively low temperature until the electrode mass has become sufficiently baked. In the latter case the lower part of the electrode and the mantle surrounding it will become very hot, but as the electrode at this point is hard the expansion of the mantle will have no serious effect upon it.

The foregoing detailed description has been given for clearness of understanding and no undue limitation should be deduced therefrom, but the appended claims should be construed as broadly as permissible in view of the prior art.

What I claim as new and desire to secure by Letters Patent of the United States is:

1. The process of forming an electrode which comprises building the electrode up at one end in sections and applying heat, each section comprising an enclosing metallic mantle and electrode mass.

2. In the manufacture of electrodes for electric furnaces the process which comprises tamping raw electrode mass into a metallic mantle which constitutes a part of the electrode and which is provided with projections extending into the electrode mass, and passing electric current through the mantle whereby heat is generated and distributed into the interior of the electrode mass and baking of the latter thus effected.

3. In the manufacture of electrodes for electric furnaces the process which comprises tamping raw electrode mass into a metallic mantle which constitutes a part of the electrode and which is provided with projections extending into the electrode mass, and passing electric current through the mantle

whereby heat is generated and distributed along the bordering surface and into the interior of the electrode mass and baking of the latter thus effected.

4. In the manufacture of electric furnace electrodes the process which comprises tamping raw electrode mass into a metallic mantle which constitutes a part of the electrode and heating the mass to a comparatively low temperature whereby the mass becomes sufficiently hard to withstand the tension caused by the expansion of the metallic mantle at the comparatively high temperatures subsequently employed.

5. In the manufacture of electric furnace electrodes the process which comprises tamping raw electrode mass into a metallic mantle which constitutes a part of the electrode, placing the mantle and electrode mass in an electric furnace and leading an electric current through the mantle and electrode mass, thereby baking the raw electrode mass within the metallic mantle.

6. In the manufacture of electric furnace electrodes the process which comprises tamping raw electrode mass into a metallic mantle placed in an electric furnace which mantle constitutes a part of the electrode and leading an electric current through the metallic mantle, thereby first baking the part of the raw electrode mass nearest the melting crater of the electric furnace by means of heat generated in said melting crater and also in the metallic mantle, and completing the baking of the electrode mass partly by heat generated in the metallic mantle and partly conducted from the baked electrode mass near the melting crater.

7. In the manufacture of electric furnace electrodes the process which comprises tamping raw electrode mass into a metallic mantle placed in an electric furnace which mantle constitutes a part of the electrode and leading an electric current through the metallic mantle, thereby first baking the part of the raw electrode mass nearest the melting crater of the electric furnace by means of heat generated in said melting crater and also in the metallic mantle, completing the baking of the raw electrode mass partly by heat generated in the metallic mantle and partly conducted from the baked electrode mass near the melting crater, placing a new section of metallic mantle on the top of the electrode and tamping raw electrode mass thereinto, thus continuously making the electrode in the electric furnace in which it is used.

8. An electric furnace electrode comprising a carbonaceous portion and an enclosing metallic mantle, the carbonaceous portion of the electrode being baked at one end of the electrode and unbaked at the other.

9. An electric furnace electrode comprising electrode mass and an enclosing mantle, and means for elastically connecting the mass and the mantle.

10. An electric furnace electrode comprising electrode mass and an enclosing mantle, the mantle being provided with projections extending into the electrode mass.

11. An electric furnace electrode comprising a continuous core of electrode mass and an enclosing mantle in sections, the core being renewable at one end without break in the continuity thereof.

12. As a new and useful article of manufacture an electrode for electric furnaces comprising a metallic mantle and electrode mass tamped thereinto said mantle being provided with ribs penetrating into the electrode mass and securing an intimate electrical and mechanical contact between mantle and electrode mass.

13. As a new and useful article of manufacture an electrode for electric furnaces comprising a metallic mantle and electrode mass tamped thereinto, said mantle being provided with ribs and said ribs being provided with projections, the ribs penetrating into the electrode mass and securing an intimate electrical and mechanical contact between mantle and electrode mass.

14. As a new and useful article of manufacture an electrode for electric furnaces comprising a metallic mantle provided with holes and electrode mass tamped into said mantle.

15. As a new and useful article of manufacture an electrode for electric furnaces comprising a metallic mantle provided with holes and electrode mass tamped into said mantle, the mantle having ribs penetrating into the electrode mass and thereby securing an intimate electrical and mechanical contact between the mantle and electrode mass.

16. As a new and useful article of manufacture an electrode for electric furnaces comprising a metallic mantle provided with holes and electrode mass tamped into said mantle, the mantle having ribs penetrating into the electrode mass and thereby securing an intimate electrical and mechanical contact between the mantle and electrode mass, said ribs being provided with projections.

Signed at Christiania, Norway, this 15th day of July, 1919.

CARL WILHELM SÖDERBERG.

Jan. 2, 1923. 1,441,037.

C. W. SÖDERBERG.

PROCESS OF BAKING CARBON ELECTRODES.

FILED DEC. 4, 1917. 2 SHEETS—SHEET 1.

Fig. 1.

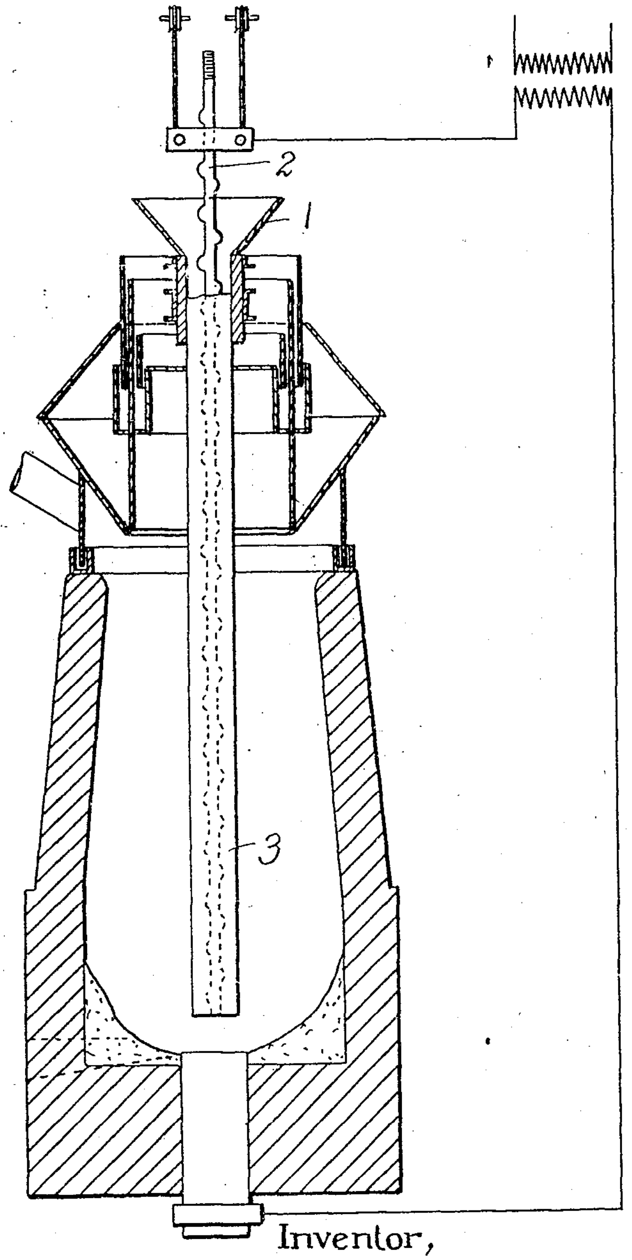

Inventor,
Carl Wilhelm Söderberg

by
Attorneys

Jan. 2, 1923.

1,441,037.

C. W. SÖDERBERG.

PROCESS OF BAKING CARBON ELECTRODES.

FILED DEC. 4, 1917.

2 SHEETS—SHEET 2.

Fig. 2.

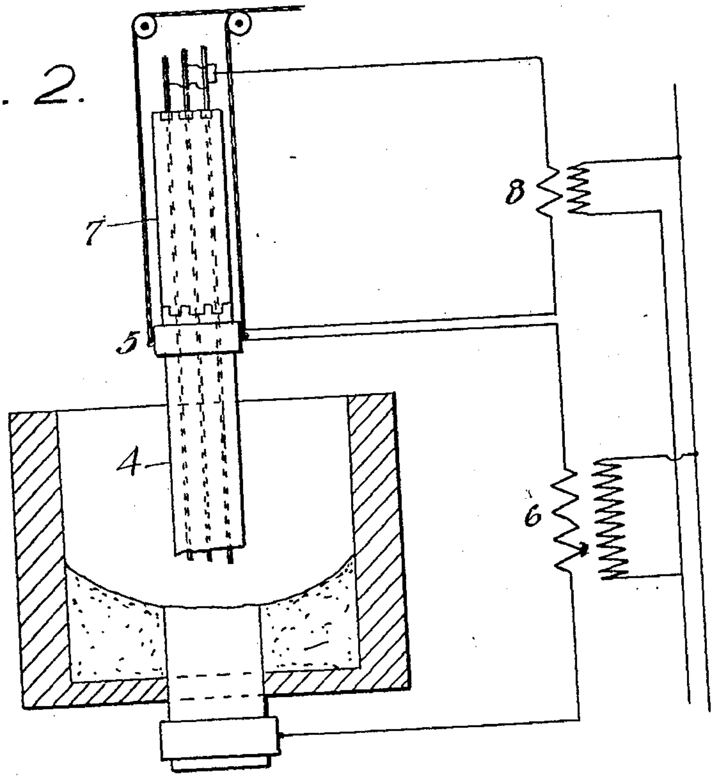

Inventor,
Carl Wilhelm Söderberg

by Davis & Cole
Attorneys

Patented Jan. 2, 1923. **1,441,037**

UNITED STATES PATENT OFFICE.

CARL WILHELM SÖDERBERG, OF CHRISTIANIA, NORWAY, ASSIGNOR TO DET NORSKE AKTIESELSKAB FOR ELEKTROKEMISK INDUSTRI OF NORWAY, OF CHRISTIANIA, NORWAY.

PROCESS OF BAKING CARBON ELECTRODES.

Application filed December 4, 1917. Serial No. 205,416.

To all whom it may concern:

Be it known that I, CARL WILHELM SÖDERBERG, a subject of Norway, and a resident of Christiania, Kingdom of Norway, have invented certain new and useful Improvements in the Processes of Baking Carbon Electrodes, of which the following is a specification.

This invention relates to the manufacture of electrodes for use in electric furnaces and as anodes or cathodes in various electrolytic processes. The object of the invention is an improved process for manufacturing the same and the electrode obtained thereby.

Electrodes for the purpose above mentioned are generally made from some carbonaceous material such as coal, coke, graphite, etc. The material or materials selected are reduced to the desired fineness and mixed with a suitable binder such as tar or pitch. The mixture is then moulded to the desired form and baked in a suitable furnace until the volatile products are driven off and the electrode has the desired density and conductivity.

The raw electrodes have a comparatively high resistance and are not conductive to any appreciable extent. The resistance, however, depends somewhat upon the materials employed in the manufacture; for instance, an electrode of course graphite will have a higher conductivity than one composed of other carbonaceous materials. In most cases the raw electrode will have a conductivity about 10000 times lower than it will have in the finished state.

Many attempts have been made to bake electrodes by means of the heat generated within the electrode itself when made a part of an electric circuit, but on account of the high resistance of the raw electrodes, this method has been found to be impractical.

According to my invention this difficulty is overcome by baking and rendering the electrode conductive in a part of its cross-section by means of heat electrically generated in a conductor connected in parallel with the electrode. This conductor may consist of metal or of a baked electrode. Preferably it is one or more iron bars inserted in the electrode itself.

As will be understood from the following examples my method is susceptible of many variations all of which embody the process above outlined. For instance, electrodes may be baked in a special electric furnace or the baking may be carried on simultaneously with the use of the electrode itself in the furnace in which it is mounted. In the latter case a portion of the baking is accomplished by the heat of the furnace in which the electrode is employed.

In either of the instances cited the raw electrode may be of the same construction and made in the same manner. A mould may be employed in this process in which is preferably mounted a core of conductive material, such as a rod of iron in diameter, for example. $\frac{3}{8}''$, or a small carbonaceous electrode. The raw materials for the electrode are tamped around the core in the usual manner and the mould removed as will be readily understood.

Where a separate furnace is to be employed for the baking of the electrode, the raw electrodes are placed therein and are series-connected in the secondary of a transformer furnishing sufficient current for the baking. With twenty electrodes, for example, a 400 kilowatt transformer of the voltage regulator type giving from 220 to 110 volts may be used. To this end electrode No. 1 may be placed on a carbon-block, that is connected to one terminal of the secondary. On the top-end of the same electrode is placed a short piece of carbon or graphite electrode of good conductivity that will take the current over to the top-end of electrode No. 2. The lower end of No. 2 rests on another piece of a carbon or graphite electrode. Electrode No. 3 is placed on the same piece of carbon or graphite, and so on, the last electrode of the series being connected to the other terminal of the secondary. The spaces between the electrodes are then filled with fine sand or finely ground charcoal. If the current is switched on with about 200 volts between the terminals, the ameter will immediately register about 800 amperes. The current drops slightly at the start and then gradually rises to about 2500 to 3000 amperes during a period of 24 to 36 hours as the baking of the electrodes proceeds. At the end of this time the baking is finished and the drop of potential will be about 6 volts per electrode if the current is 3000 amperes. It is possible to use a transformer without voltage regulation, but the baking will then proceed more slowly.

The electrodes baked as above are allowed to cool before removing from the furnace. This requires about 36 hours.

If an iron core has been employed its presence in the finished electrode would depend on the temperature obtained during baking. If it is dsired to bake at from 1500° to 1600° C. the iron will obviously melt and the baked portion alone of the electrode carry the current to complete the baking. Generally so high temperatures are not necessary and the iron-rod will be found in the electrode after the baking.

As a variation in the above method of baking in a separate furnace, it is readily possible if desired to make use of baked electrodes in place of an interior core. In that case the following arrangements of electrodes will be employed.

The raw electrodes and the ready baked electrodes are built up together, always one raw and one baked electrode close together and with top and bottom connected to the same conductor. At first the current will only pass through the baked electrode, but as the heat generated in this bakes the near side of the raw electrode this becomes slightly conductive and takes part in the transmission of current. The conductivity and the resulting heat development increase until the raw electrode is finally baked.

The second method of baking electrodes, to wit, by the use of the furnace in which they are employed as heating elements, is particularly advantageous where very long electrodes are desired, though obviously not limited thereto. The present type of electrode is about six feet long and to employ these in the furnaces referred to requires their being joined together and the present practice is to use a fragile carbon nipple for this purpose. The method now to be considered not only eliminates this difficulty but in making use of the electric furnace itself for baking makes possible the continuous supply of electrodes without shutting down the furnace for the installation of new electrodes.

This method is shown diagrammatically in the drawings which form a part hereof and which it is to be understood, are for illustrative purposes only.

In these drawings:—

Figure 1 is a diagrammatic vertical section of a simple electric shaft furnace for the manufacture of pig-iron; and

Fig. 2 is a diagrammatic cross-section of the usual type of metallurgical furnace.

The figures illustrate not only the different types of furnace to which the process is applicable but different methods of baking the electrodes themselves.

The electrode in the construction of Figure 1 is suspended at the top of the furnace and extends centrally down the shaft, when in use being surrounded by the ore and reducing material. The mixture of tar, coke, and anthracite used for making the electrode is filled in the funnel 1 and tamped around one or more iron bars 2. The current is led to the furnace through one or more of these iron bars which may also serve as a suspending means for the electrode. The iron bars may be corrugated or provided with small knots in order to prevent the electrode from sliding on them.

As the raw electrode mass is a poor conductor, the iron bars initially will alone carry the whole current above the shaft and in the upper and cool part of the shaft. Through the heat electrically generated in the bars and the heat from the smelting crucible the electrode is gradually baked and becomes conductive and will take part in the transmission of the current. Still nearer the zone of fusion—as at 3—the temperature of the electrode is so high, that the iron core melts out, the newly baked carbon electrode alone carrying the current.

The metal used for reinforcing the electrode need not be iron. Any metal can be used that has a melting point sufficiently high above the temperature at which the electrode mass becomes a good conductor, and which has sufficient mechanical strength. The reinforcing metal can thus be chosen according to the smelting process in question.

In the example just described, the entire smelting current was initially led to the furnace through the iron core and the cross-section of the core must therefore be large enough to carry the whole current. It is also possible to bake the electrode by a current that is only a fraction of the current used for the smelting operation. In this case the cross-section of the iron-bars can be much smaller. Fig. 2 illustrates the employment of such a method by the use of a separate transformer. In this figure the portion 4 of the electrode used for smelting is diagrammatically illustrated as already having been baked and as suspended from the electrode-holder 5 through which it is supplied with the working current, for example, 18000 amperes, from the secondary 6 of the lower transformer. The upper or raw portion of the electrode 7 formed by tamping the raw material around the iron bars, as is readily understood, is connected in series with the secondary 8 of the upper transformer and supplied with a baking current sufficient to cause slow baking; for example, about 2000 amperes. This transformer is preferably of low voltage and potential regulating type. As the lower portion 4 of the electrode is burned away, the electrode holder 5 is shifted to the newly baked portion 7 of the electrode which is then used in the smelting operation.

The foregoing detailed description has been given for clearness of understanding and no undue limitation should be deduced therefrom, but the appended claims should be construed as broadly as permissible in view of the prior art.

What I claim as new and desire to secure by Letters Patent of the United States is:

1. The process of baking carbon electrodes which consists in connecting a conductor in parallel with a raw electrode and applying an electric current whereby a part of the raw electrode is baked and rendered conductive by heat electrically generated in the conductor and the baking continued by means of heat electrically generated in the conductor and in the electrode itself.

2. The process of baking carbon electrodes which consists in connecting a conductor in parallel with a raw electrode and applying an electric current whereby a part of the raw electrode is baked and rendered conductive by heat electrically generated in the conductor and the baking continued by means of heat electrically generated in the conductor and in the electrode itself, said conductor being incorporated with the raw electrode.

3. The process of baking carbon electrodes which consists in connecting a metal conductor in parallel with a raw electrode and applying an electric current whereby a part of the raw electrode is baked and rendered conductive by heat electrically generated in the metal conductor and the baking continued by means of heat electrically generated in the conductor and in the electrode itself.

4. The process of baking carbon electrodes which consists in connecting a metal conductor in parallel with a raw electrode and applying an electric current whereby a part of the raw electrode is baked and rendered conductive by heat electrically generated in the metal conductor and the baking continued by means of heat electrically generated in the metal conductor and in the electrode itself, said metal conductor being incorporated with the raw electrode.

5. The process of baking carbon electrodes which consists in connecting an iron conductor in parallel with a raw electrode and applying an electric current whereby a part of the raw electrode is baked and rendered conductive by heat electrically generated in the iron conductor and the baking continued by means of heat electrically generated in the iron conductor and in the electrode itself.

6. The process of baking carbon electrodes which consists in connecting an iron conductor in parallel with a raw electrode and applying an electric current whereby a part of the raw electrode is baked and rendered conductive by heat electrically generated in the iron conductor and the baking continued by means of heat electrically generated in the iron conductor and in the electrode itself, said iron conductor being incorporated with the raw electrode.

7. The process of baking carbon electrodes which consists in connecting a conductor in parallel with a raw electrode and applying an electric current whereby a part of the raw electrode is baked and rendered conductive by heat electrically generated in the conductor and the baking continued by means of heat electrically generated in the conductor and in the electrode itself, said conductor and electrode being connected in series with another conductor and electrode, which is baked simultaneously.

8. The process of compensating for the wasting away of an electric furnace electrode at its operating end within a furnace, which comprises adding raw electrode material to the opposite end of the electrode and baking said raw material after its addition thereto.

9. The process of compensating for the wasting away of an electric furnace electrode at its operating end within a furnace, which comprises adding raw electrode material to its opposite end and baking said raw material partly by passing an electric current through the electrode and partly by the heat generated at the operating end of the electrode when in use.

10. The process of producing carbon electrodes continuously in the furnace in which they are employed, which comprises supplying in electrode form raw electrode material together with a conductor in parallel connection therewith and applying current whereby the raw electrode is baked and rendered conductive in part by the heat electrically generated in the electrode itself and in part by the heat generated at the operating end of the electrode when in use.

11. The process of baking carbon electrodes for electric furnaces which consists in connecting a conductor in parallel with a raw electrode and applying an electric current whereby a part of the raw electrode is baked and rendered conductive by heat electrically generated in the conductor and the baking continued by means of heat electrically generated in the conductor and in the electrode itself, said electrode being the electrode of an electric furnace.

12. The process of baking carbon electrodes for electric furnaces which consists in connecting a conductor in parallel with a raw electrode and applying an electric current whereby a part of the raw electrode is baked and rendered conductive by heat electrically generated in the conductor and the baking continued by means of heat electri-

cally generated in the conductor and in the electrode itself, said electrode being the electrode of an electric furnace, and the baking of the electrode being accelerated by heat generated in said electric furnace.

13. The process of baking carbon electrodes for electric furnaces which consists in connecting a conductor in parallel with a raw electrode and applying an electric current whereby a part of the raw electrode is baked and rendered conductive by heat electrically generated in the conductor and the baking continued by means of heat electrically generated in the conductor and in the electrode itself, said electrode being the electrode of an electric furnace, the electrode being continuously formed in said furnace.

14. The process of baking carbon electrodes for electric furnaces which consists in connecting a conductor in parallel with a raw electrode and applying an electric current whereby a part of the raw electrode is baked and rendered conductive by heat electrically generated in the conductor and the baking continued by means of heat electrically generated in the conductor and in the electrode itself, said electrode being the electrode of an electric furnace, and said conductor being able to carry the total electric current led to the electric furnace.

15. The process of baking carbon electrodes for electric furnaces which consists in connecting a conductor in parallel with a raw electrode and applying an electric current whereby a part of the raw electrode is baked and rendered conductive by heat electrically generated in the conductor and the baking continued by means of heat electrically generated in the conductor and in the electrode itself, said electrode being the electrode of an electric furnace, and said conductor being able to carry only part of the total electric current led to the furnace.

16. As a new and useful article of manufacture, an electrode comprising an initial conductor and a carbonaceous unbaked portion.

17. As a new and useful article of manufacture, an electrode comprising an initial conductor and a carbonaceous unbaked portion connected in parallel with each other.

18. As a new and useful article of manufacture, an electrode baked in the furnace in which it is used and comprising when in use a baked portion and a partially baked portion.

19. As a new and useful article of manufacture, an electrode baked in the furnace in which it is used and comprising when in use a body portion, a part of which is baked and a part of which is unbaked, and a reinforcing member of conductive material in parallel electrical relation therewith.

20. As a new and useful article of manufacture, an electrode for use in an electric furnace comprising a body portion structurally differing at its two ends and a reinforcing member of conductive material in parallel relation therewith, the conductivity of the body portion being permanently greater at the working end thereof.

CARL WILHELM SÖDERBERG.

Jan. 9, 1923.

1,442,031.

C. W. SÖDERBERG.

METHOD OF SUSPENDING ELECTRODES.

FILED JAN. 27, 1920.

Fig. 1.

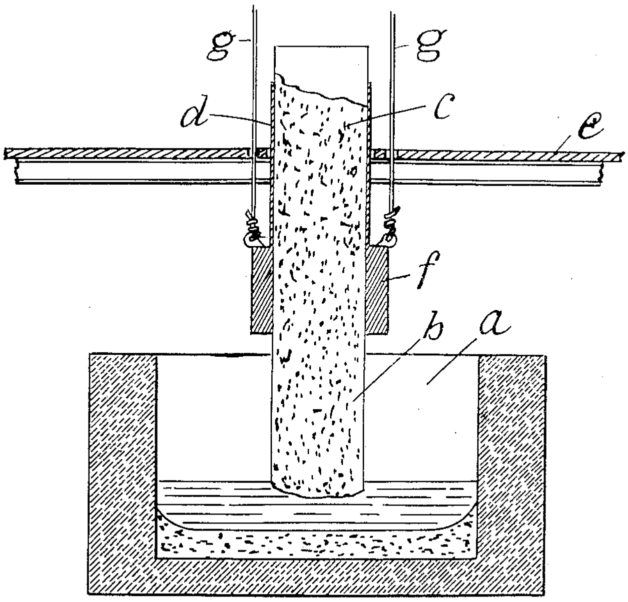

Fig. 2.

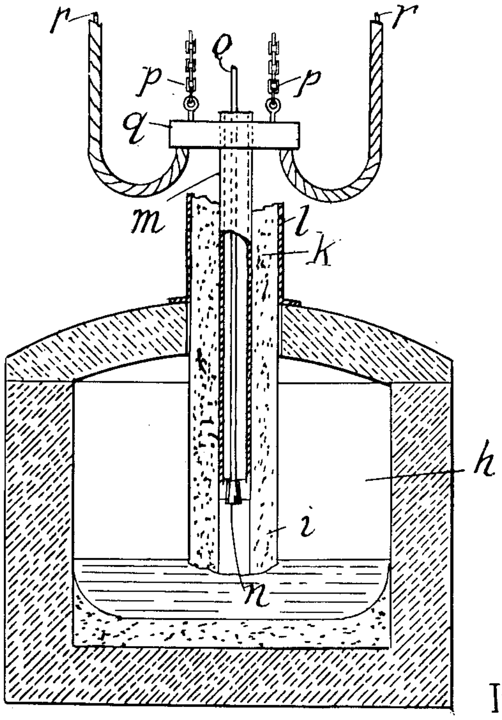

Inventor,
Carl Wilhelm Söderberg,
By
Attorneys.

Patented Jan. 9, 1923. **1,442,031**

UNITED STATES PATENT OFFICE.

CARL WILHELM SÖDERBERG, OF CHRISTIANIA, NORWAY, ASSIGNOR TO DET NORSKE AKTIESELSKAB FOR ELEKTROKEMISK INDUSTRI, OF CHRISTIANIA, NORWAY, A BUSINESS ENTITY.

METHOD OF SUSPENDING ELECTRODES.

Application filed January 27, 1920. Serial No. 354,369.

To all whom it may concern:

Be it known that I, Carl Wilhelm Söderberg, a subject of Norway, and a resident of Christiania, Kingdom of Norway, have invented certain new and useful Improvements in the Methods of Suspending Electrodes, of which the following is a specification.

This invention relates to electrodes being baked in the electric furnace in which they are used and the object of the invention is a method whereby such electrodes may be suspended from their lower part which is baked and consequently hard.

In the baking of electrodes in the electric furnace in which they are used the electrodes have either been suspended from a metallic core around which the raw electrode mass has been tamped such as set forth in my U. S. patent application Serial No. 205,416 filed December 4, 1917, or in a metallic mantle enveloping the electrode mass, Serial No. 322,840, filed September 8, 1919.

According to my present invention I suspend the electrode from its lower baked part, thus obtaining great advantage in that the weight of the electrode instead of causing a strain in the electrode mass serves to compress it and secure a compactness of the electrode at the point where baking takes place.

I can attach the holder to the baked electrode mass in various ways. It may be advantageous to attach the holder externally around the electrode, but it may also in certain cases be attached internally. In certain types of furnace the latter arrangement may be preferable as the holder may then be placed very low down, even lower than the roof of the furnace.

On account of of the comparatively high temperature in the lower part of the electrode it may be necessary to arrange cooling of the holder either in the form of water cooling or by other known means. This is especially necessary when internal holders are used.

By my method of suspending the electrode a metallic core or casing may if desired be completely avoided, and no metal will then enter the furnace together with the electrode. In many cases, however, it is advantageous with my present method to employ a metallic mantle and in case of internal suspension also a tubular metallic lining to which the holder may be attached.

As the lower part of the electrode is gradually consumed the holder is detached and moved upwards, care being taken not to move the holder above the baked and hard part of the electrode. The holder is then again attached and the electrode may be lowered as commonly practiced with ordinary electrodes. New electrode mass may be supplied to the top of the electrode in channelled or solid electrode form through a mold or otherwise as may be desired in each special case. and the electrode thus be made continuously in the furnace in which it is employed; or in the alternative electrodes of a definite length may be employed which when consumed may be replaced by new electrodes. In the latter case the individual electrodes must be prebaked at least in the part to which the holder is attached.

In the drawings forming part of this application I have illustrated my invention, Figure 1 showing an electrode suspended by an external holder and Figure 2 by an internal holder.

In Figure 1 *a* designates an open electric furnace, *b* the baked part of the electrode, *c* the unbaked or only slightly baked part of the electrode, and *d* a mantle into which the raw electrode mass is tamped. This mantle as illustrated in the drawings has the character of a mold and does not follow the electrode into the furnace but is displaced upwards together with the holder *f*. The supplying of the electrode mass and the tamping of the same into the mantle may be readily effected from the platform *e*. The holder *f* is illustrated as attached to the baked part of the electrode below the mantle *d* and suspended by cables *g*, the holders shown being of the well known clamped ring type.

In carrying out my invention with the form illustrated in Figure 1, I proceed as follows:—

An electrode formed from raw electrode mass and baked at its lower end by a preliminary heating is placed in the mantle *d* and suspended over the electric furnace *a* by means of the cables *g*. An electric current is supplied to the holder either through the cables *g* or through a special connection. The current will pass through the holder *f* and the baked part of the electrode into the electric furnace. The electrode mass will gradually become baked also in its upper part by means of heat from the electric furnace. The electrode holder *f* may therefore gradually be moved upwards, the electrode still being suspended only in its baked part. The mantle or mould *d* in this particular illustration is moved upwards together with the holder *f*, and it will be understood that no metal will be brought into the furnace by the electrode. As the electrode is consumed and lowered new electrode mass is tamped into the mantle or mould *d*, the electrode thus being made continuously.

Figure 2 illustrates my invention in connection with an internal holder, a closed electric furnace *h* being shown. As in the case of Figure 1 the lower part *i* of the electrode is baked and the upper part *k* is unbaked or only slightly baked and a mold or mantle *l* is illustrated which does not enter the furnace. The holder *m* is water cooled and extends into a longitudinal channel formed through the center of the electrode. The holder consists of a tube split at its lower end into several sections which are pressed into holding engagement with the baked part of the electrode *i* by means of a wedge *n* when the wedge is pulled upwards by means of the rod *o*. The holder *m* is attached to a clamp or similar device *q* hanging in the chains or cables *p*. The electric current is supplied through the leads *r*.

In carrying out my invention with the form illustrated in Figure 2, I proceed as follows:—

An electrode formed from raw electrode mass and baked at its lower end by a preliminary heating is placed in the closed electric furnace *h*. The electrode is formed with a channel through its center and through this channel I introduce the holder *m*. When the lower end of the tube has extended down to the baked part of the electrode *i*, I pull the rod *o* upwards thereby raising the wedge and pressing the lower end of the holder tight to the baked part of the electrode. The electrode will now hang from the lower part of the tube. As the electrode becomes baked by means of heat from the electric furnace and is consumed therein the wedge may be pushed down thus loosening the grip of the holder, and the latter may be moved upwards to a suitable distance from the melting crater of the furnace and again tightened. New electrode mass is from time to time tamped into the mould or mantle *l* thus compensating for the consumption at the working end of the electrode.

As will be understood from above example this method of suspending electrodes offers special advantages for closed types of electric furnaces, and the channel through the electrode may then if desired be used for introducing or removing gas and also for charging the furnace.

The foregoing detailed description has been given for clearness of understanding only and no undue limitation should be deduced therefrom but the appended claims should be construed as broadly as permissible in view of the prior art.

What I claim as new and desire to secure by Letters Patent of the United States is:

1. Method of suspending electrodes being baked in the electric furnace in which they are used which consists in attaching a holder to the lower baked part of the electrode and suspending the electrode therefrom.

2. Method of suspending electrodes being baked in the electric furnace in which they are used which consists in attaching a holder to the lower baked part of the electrode and suspending the electrode therefrom and from time to time moving the holder upwards as the electrode is consumed.

3. Method of suspending electrodes being baked in the electric furnace in which they are used which consists in attaching a holder internally in a longitudinal channel through the electrode and suspending the electrode therefrom.

4. Method of suspending electrodes being baked in the electric furnace in which they are used which consists in introducing a tube into a longitudinal channel through the electrode and attaching said tube to the lower part of the electrode and suspending the electrode from said tube.

5. Method of suspending electrodes being baked in the electric furnace in which they are used which consists in introducing a tube into a longitudinal channel through the electrode, said tube being split up at its lower end and a rod passing through the tube provided with a wedge mounted on its lower end, attaching the lower end of the tube to the baked part of the electrode by pulling said wedge upwards and suspending the electrode from said tube.

6. Method of suspending electrodes being baked in the electric furnace in which they are used which consists in introducing a metal tube into a longitudinal channel through the electrode, said metal tube being split up at its lower end and a rod passing through the metal tube provided with a wedge mounted on its lower end, attaching the lower end of the metal tube to the baked part of the electrode by pulling said wedge upwards and suspending the electrode from said metal tube.

7. Method of suspending electrodes being baked in the electric furnace in which they are used which consists in introducing a metal tube into a longitudinal channel through the electrode, said metal tube being split up at its lower end and a rod passing

through the metal tube provided with a wedge mounted on its lower end, attaching the lower end of the metal tube to the baked part of the electrode by pulling said wedge upwards and suspending the electrode from said metal tube, said metal tube being provided with water cooling.

8. Method of suspending electrodes being baked in the electric furnace in which they are used which consists in introducing a metal tube into a longitudinal channel through the electrode, said metal tube being split up at its lower end and a rod passing through the metal tube provided with a wedge mounted on its lower end, attaching the lower end of the metal tube to the baked part of the electrode by pulling said wedge upwards and suspending the electrode from said metal tube, said tube being provided with water cooling, and from time to time moving the tube upwards as the lower end of the electrode is consumed.

9. The process of producing carbon electrodes in the furnace in which they are being employed, which comprises baking the lower part of the electrode by the heat from said furnace, suspending the electrode by a clamping action exerted at the level of a baked portion thereof, and supplying raw electrode material to the top of the electrode, whereby tensile strain in the electrode above the baked portion is avoided.

10. The process of producing carbon electrodes continuedly in the furnace in which they are being employed, which comprises baking the lower part of the electrode by the heat from said furnace, suspending the electrode by a clamping action exerted at the level of a baked portion thereof by an electrode holder, and supplying raw electrode material to the top of the electrode and moving the electrode holder upwardly in respect to the electrode as the electrode is consumed.

11. The process of producing a carbon electrode provided with a longitudinal channel in the furnace in which it is being employed, which comprises baking the lower part of the electrode by the heat from the said furnace, suspending the electrode from the baked portion thereof and supplying raw electrode material to the top of the electrode in channelled electrode form, whereby tensile strain in the electrode above the baked portion is avoided.

12. The process of producing a carbon electrode provided with a longitudinal channel in the furnace in which it is being employed, which comprises baking the lower part of the electrode by the heat from the said furnace, suspending the electrode from the baked portion thereof by an inside electrode-holder, and supplying raw electrode material to the top of the electrode in channelled electrode form.

13. The process of producing a carbon electrode provided with a longitudinal channel continuedly in the furnace in which it is being employed, which comprises baking the lower part of the electrode by the heat from the said furnace, suspending the electrode from the baked portion thereof by an electrode-holder, and supplying raw electrode material to the top of the electrode in channeled electrode form and moving the electrode-holder upwardly in respect to the electrode as the electrode is consumed.

14. The process of producing a carbon electrode provided with a longitudinal channel continuedly in the furnace in which it is being employed, which comprises baking the lower part of the electrode by the heat from the said furnace, suspending the electrode from the baked portion thereof by an inside electrode-holder, and supplying raw electrode material to the top of the electrode in channelled electrode form and moving the electrode-holder upwardly in respect to the electrode as the electrode is consumed.

15. The process of producing carbon electrodes continuedly in the furnace in which they are being employed, which comprises baking the lower part of the electrode by the heat from the said furnace, suspending the electrode from the baked portion thereof by an electrode-holder, and supplying raw electrode material to the top of the electrode through a mold and moving the electrode-holder upwardly in respect to the electrode as the electrode is consumed.

16. The process of producing a carbon electrode provided with a longitudinal channel continuedly in the furnace in which it is being employed, which comprises baking the lower part of the electrode by the heat from the said furnace, suspending the electrode from the baked portion thereof by an electrode-holder, and supplying raw electrode material to the top of the electrode through a mold in channelled electrode form and moving the electrode-holder upwardly in respect to the electrode as the electrode is consumed.

17. The process of producing a carbon electrode provided with a longitudinal channel continuedly in the furnace in which it is being employed, which comprises baking the lower part of the electrode by the heat from the said furnace, suspending the electrode from the baked portion thereof by an inside electrode-holder, and supplying raw electrode material to the top of the electrode through a mold in channelled electrode form and moving the electrode-holder upwardly in respect to the electrode as the electrode is consumed.

18. As a new and useful article of manufacture, a channelled electrode baked in the furnace in which it is used and adapted for the introduction into or removal from the furnace of gas, said electrode comprising

when in use a baked portion and a partially baked portion.

19. As a new and useful article of manufacture, an electrode provided with a feeding channel baked in the furnace in which it is used and comprising when in use a baked portion and a partially baked portion.

20. As a new and useful article of manufacture, an electrode for use in an electric furnace provided with a channel adapted for charging the furnace and comprising a body portion structurally differing at its two ends, the conductivity of the body portion being permanently greater at the working end thereof.

21. As a new and useful article of manufacture, an electrode baked in the furnace in which it is used and comprising when in use a baked portion and a partially baked portion, the compactness of the electrode increasing toward the working end thereof.

22. The combination of an electrode provided with an internal longitudinal channel and means within the channel for supporting the electrode.

23. The combination of a hollow electrode and holder therefor projecting down into the hollow of the electrode and movable longitudinally in respect to the electrode.

24. An inside holder for a hollow electrode comprising cooperating members movable in respect to each other to create a clamping action in the holder to sustain the electrode.

25. An inside holder for a hollow electrode comprising cooperating members movable in respect to each other to expand the holder to cause it to clamp the electrode.

26. In combination with a hollow electrode having a clamping surface on its interior, a holder therefor adapted to be inserted within the hollow of the electrode, and comprising cooperating members movable in respect to each other to create a clamping action between the holder and the clamping surface on the interior of the electrode.

27. In an inside holder for a hollow electrode the combination of cooperating members, movable in respect to each other and operable therefor from outside the electrode to create a clamping action in the holder to sustain the electrode.

28. In an inside holder for hollow electrodes, the combination of a gripping member comprising a plurality of gripping parts, an actuating member therefor provided with wedge-shape contours whereby the said gripping member parts are brought into operation, and means operable from outside the electrode for effecting an operative engagement of the actuating member with the gripping member.

29. In an inside holder for a hollow electrode comprising cooperating members extending from above the top of the electrode down into the interior thereof and movable in respect to each other to create a clamping action in the holder to sustain the electrode.

30. In an inside holder for hollow electrodes, the combination of a gripping member comprising a plurality of gripping parts, an actuating member therefor provided with wedge-shape contours whereby the gripping member parts are brought into operation, means extending from the gripping member and the actuating member whereby the said members may be positioned in the electrode from the top thereof and whereby an operative engagement between the gripping member and the actuating member may be effected.

Signed at Christiania, Norway, this 15th day of April, 1919.

CARL WILHELM SÖDERBERG.

Jan. 4, 1927.

J. WESTLY

1,613,212

SELF BAKING ELECTRODE

Filed Jan. 5, 1925

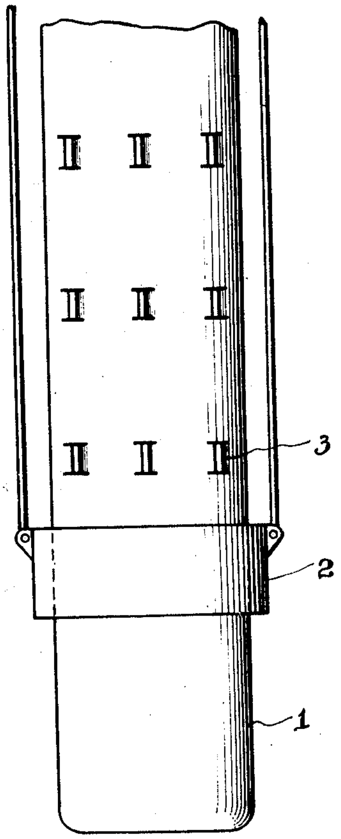

FIG. 1.

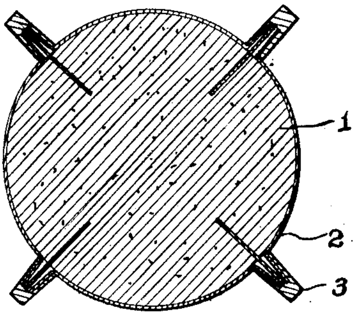

FIG. 3.

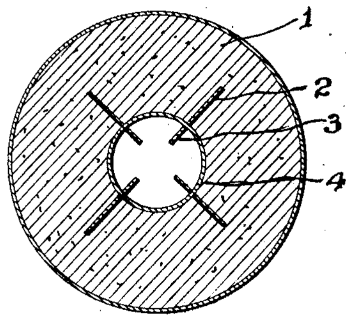

FIG. 4.

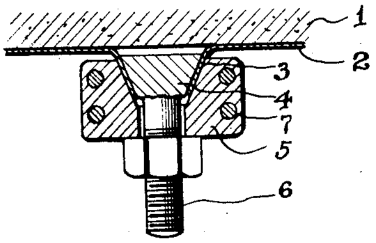

FIG. 2.

Inventor
Jens Westly

By Lorsey A Cole
Attorney

Patented Jan. 4, 1927. **1,613,212**

UNITED STATES PATENT OFFICE.

JENS WESTLY, OF CHRISTIANSAND, NORWAY, ASSIGNOR TO DET NORSKE AKTIESELSKAB FOR ELEKTROKEMISK INDUSTRI OF NORWAY, OF OSLO, NORWAY.

SELF-BAKING ELECTRODE.

Application filed January 5, 1925, Serial No. 711, and in Norway January 17, 1924.

This invention relates to selfbaking electrodes, that is, electrodes which are baked in the furnace in which they are used, and the object of the invention is the provision of a contact supplying electric current to the electrode without substantial loss of voltage.

In U. S. Patent No. 1,440,724 there is described "self-baking" electrodes provided with metallic mantles. In said patent it is stated that one of the functions of the mantle is to transmit the current to the electrode, which function is facilitated by the employment of ribs or similar attachments projecting into the electrode mass and giving a good contact therewith. The electric current is generally supplied to the mantle and the electrode is also supported by means of an external electrode-holder clamped tightly around the electrode. The contact thus obtained between holder and mantle is generally satisfactory. Some dust, however, may gather on the electrode mantle and during the displacement of the holder more or less of this dust may be carried in between the contact surfaces, causing a certain resistance and consequent voltage loss. This loss of voltage is generally quite negligible compared with the total voltage of the furnace. In certain special cases it may, however, be of importance to avoid this loss of voltage. An excellent example is the application of the electrode in furnaces for the production of aluminium, as the total voltage of the furnace in this case is only 6,5–7 volts. If for instance the drop in voltage from holder to electrode is 0,35 volts this amounts to 5% of the total voltage. In furnaces for the production of aluminium it has been proposed to supply electrodes with aluminium mantles. This metal readily becomes coated with a thin oxide film offering considerable resistance to the passage of the current. The loss of voltage may therefore easily become relatively large and precautions should be taken to reduce the resistance. For this purpose I have found it desirable to employ a contact arrangement which in its principle is shown in the drawing forming part of this application.

In the drawing Fig. 1 illustrates a modification in which the mantle is provided with a number of straps which are bent so as to extend outwardly from the electrode and to which the contact arrangements are firmly attached. Fig. 2 shows a contact arrangement clamped on to two straps. Figs. 3 and 4 are sections through Fig. 1. 1 is the electrode, 2 the mantle and 3 one of the two straps which are held tightly between the two metal blocks 4 and 5 by means of the bolt and nut 6. Thus the contact becomes practically perfect and little or no loss of voltage can be found in the contact. At the same time the arrangement possesses the advantage that the contacts may be raised one at a time while the other contacts maintain the supply of current, no disturbance in the working being caused during the raising.

The independent electrical contacts may be made in different ways, for example by clamping to straps as above described, or by direct pressure against the surface of the sheet metal, or by clamping conductors firmly against the surfaces of the externally projecting portions of the ribs, as hereinafter described. If the current is supplied directly to the ribs the metallic mantle may be left out and for instance be replaced by a mantle consisting of netting. If the netting is of sufficiently fine meshes it will keep the mass inside during the baking.

The suspension of the electrode may be effected by means of the contact arrangements, but it is preferable to employ a special supporting electrode-holder such as illustrated at 2^a Figure 1, which for instance clamps around the electrode. In many cases it is advantageous to place the contact arrangement at a considerable height above the bath. To reduce the drop in voltage it is often advantageous to reinforce the ribs or prolongations to which the contact arrangement is attached. This may for instance be done by casting aluminium around the external parts of ribs as shown in Fig. 3, in which 1 is the electrode, 2 the mantle and 3^a the metal cast around the external parts of the ribs.

My contact arrangement may also be employed in connection with hollow selfbaking electrodes where the electric current is supplied through a contact arrangement placed in the channel. Such an arrangement is shown in U. S. Patent No. 1,442,031. The channel is provided with a suitable metal lining, for instance in the form of a tube having thin walls. The tube may if desired be provided with holes to let out the gases formed during the baking of the electrode. The contact arrangement may for example be so made that it projects into the channel and grips around projections of the armature and (or) the extensions of the ribs. Fig. 4 shows an electrode provided with such extensions, in which figure, 1 is the electrode, 2^b the ribs having projections 3^b extending into the channel, and 4^b is the metal tube or lining.

It is of course to be understood that my invention is not limited to the above illustrations as its mode of application may vary according to the type of electrode used in each special case.

What I claim as new and desire to secure Letters Patent of the United States is:

1. In self-baking electrodes provided with metallic mantles, and electrode supporting means for controlling the position and feeding of the electrode, separate electrical contacting means independent of said electrode supporting means and adapted to introduce current into the electrode with a minimum loss in voltage at their contact therewith.

2. In self-baking electrodes provided with metallic mantles, electrical contacting means, attached to portions of said mantles and distinct from the electrode supporting means, adapted to minimize the voltage loss, where current is introduced into the electrode.

3. In electrodes of the kind described, a plurality of electrical contacting means, independent of the electrode supporting means and independently adjustable, adapted to introduce current into the electrode with a minimum drop in voltage at the contacts.

4. In electrodes of the kind described, independent electrical contacting means comprising conductors firmly attached to projecting portions of the metal mantle around the electrode, for the purpose of leading the current into it.

5. Contact arrangement for self-baking electrodes, provided with metallic mantles comprising a plurality of projections and conducting members attached thereto of which a number smaller than the total number is capable of transmitting the current to the electrode.

6. In electrodes of the kind described, metallic ribs projecting radially from the metallic mantle and adapted to make contact with electrical contact means in the external circuit and conduct the current into the electrode.

7. In electrodes of the kind described, outwardly extending metallic contact ribs forming integral continuations of the internal reinforcing ribs, and firmly attached to the mantle, and adapted to receive the electric current from the external circuit and transfer it to the electrode.

JENS WESTLY.

Patented Aug. 16, 1927. **1,639,007**

UNITED STATES PATENT OFFICE.

MATHIAS OVROM SEM, OF OSLO, NORWAY, ASSIGNOR TO DET NORSKE AKTIESELSKAB FOR ELEKTROKEMISK INDUSTRI OF NORWAY, OF OSLO, NORWAY.

PROCESS OF BUILDING UP SELF-BAKING ELECTRODES.

No Drawing. Application filed September 26, 1925, Serial No. 58,850, and in Norway October 4, 1924.

The present invention relates to electrodes being baked in the furnace in which they are used, and the object of the invention is a process whereby such electrodes are built up in a simpler and more practical way than heretofore known.

In most of the stationary carbide and ferro-alloy furnaces the building up of the electrode-sections is effected by welding a new section to the metallic mantle which encloses the electrode mass, and filling the new section with raw electrode mass. The operation is carried out in a closed room above the furnace. In furnaces arranged for tilting, as for instance steel furnaces, and in plants where the space above the furnace is too small for building a tamping-house, this method of connection cannot conveniently be used. I have now found that in such furnaces the connection may conveniently and safely be effected by placing a previously prepared section of raw electrode mass on the top of the electrode to which it is to be connected, and connecting as below described. This enables the preparation of such raw electrode sections outside the furnace in which they are to be employed, as for example at electrode factories, and transporting the same to their place of use.

I am aware of previous experiments of connecting prebaked carbon electrodes by giving their ends a suitable form and coating with tar or electrode mass. It has, however, proved impossible to attain a stable connection between a prebaked electrode and raw electrode mass which is afterwards baked on the electrode. By connecting prebaked electrodes, no other contact is therefore obtained than that which is due to the shape of the end pieces. They cannot be pasted together by means of raw mass. The only effective connection between two baked carbon or graphite electrodes is therefore one with thread and nipple.

With unbaked electrodes, however, an excellent connection may be attained by pasting. If the electrode mass contains sufficient binder, it will at 100°–200° C. be semi-liquid and between two sections of such mass a completely homogeneous connection will be formed, especially if the mass is subjected to pressure during the baking. When using selfbaking electrodes, care should be taken to keep the upper end of the electrode as raw as possible when a new section is to be connected thereto. According to my present invention, I make complete electrode-sections, well tamped or pressed, at some convenient place, and then bring them to the furnace in which they are to be used. I thus avoid the tamping of the electrode mass in or above the electric furnace and at the same time have the advantage of being able to employ the most effective machinery and tools for pressing or tamping the mass. In cold state the mass is hard and little movable relatively to the mantle and such mantle-sections with raw mass may, therefore, be subject to trade and transport in the same way as usual electrodes. The connection between the electrode-sections will be just as good as by continuous tamping of electrode mass into the mantle at the place where it is used.

The electrode-sections may consist of raw electrode mass alone or raw electrode mass with a metal armature, such for instance, as a metallic casing or mantle enclosing the raw mass. This casing may again be provided with radial ribs penetrating into the mass as is well known in the art. The mode of building up an electrode from such sections varies slightly according to the nature of the metallic armature of the electrode in question.

Electrodes in which the external mantle is without ribs may be built up by placing a new mantle-section filled with raw mass on top of the electrode in use. The mantles may be welded together end to end, or may telescope slightly, the new section preferably entering a little into the old one, which should then not be completely filled with original electrode mass. As soon as the new section is sufficiently heated the mass is rendered movable relatively to the mantle and will sink towards the mass in the electrode below. To be quite sure of a complete incorporation, some binder or raw mass with much binder preferably heated may be placed between the electrodes. Most self-baking electrodes have besides an external mantle also radial ribs or other metallic reinforcement penetrating into the electrode mass. The method of connecting will then be as follows: The armature may be made as described in foreign patent applications by Jens Westley, of common ownership herewith, as follows:

Norway, No. 25,614, filed January 12, 1922; Finland, No. 2,255, filed January 31, 1923; Sweden, No. 3.154/23, filed November 14, 1923; France, No. 180,147, filed November 14, 1923; Canada, No. 283,035, filed December 14, 1923.

The ribs then only project at one end of the mantle-section, and at the other end working openings should be arranged for welding the ribs together. Or, in all sections the ribs are longer than the mantle, the ends of the ribs projecting, for instance, 10 centimeters beyond the mantle. The mantle is tamped full of electrode mass, but the ends of the ribs remain free. The connection may be carried out above the electric furnace in which the electrode is used or the short electrode in use may be lifted out of the furnace for connection. The new section is brought in place so as to make the rib-ends of both sections meet and the rib-ends are then connected by welding or screwing. Raw electrode mass is then tamped around the ribs and the openings are closed by welding thereto, a complete belt connecting both mantles, or by bending back and welding the mantle portions which form the working openings.

The foregoing detailed description of my invention has been given for clearness of understanding only and no undue limitation should be deduced therefrom but the appended claims should be construed as broadly as permissible in view of the prior art.

What I claim as new and desire to secure by Letters Patent of the United States, is:

1. The process of building up selfbaking electrodes which comprises preparing electrode sections of raw electrode mass outside the furnace in which they are to be employed, and connecting said sections to the non-working ends of partly used electrodes.

2. The process of building up selfbaking electrodes which comprises preparing electrode sections of raw electrode mass outside the furnace in which they are to be employed, and connecting said sections with additional raw electrode mass to the non-working ends of partly used electrodes.

3. The process of building up selfbaking electrodes provided with metallic armatures which comprises preparing electrode sections of raw electrode mass enclosed in metallic armatures outside the furnace in which they are to be employed, and connecting said sections to the non-working ends of partly used electrodes of similar character.

4. The process of building up selfbaking electrodes provided with metallic armatures which comprises preparing electrode sections of raw electrode mass enclosed in metallic armatures outside the furnace in which they are to be employed, and electrically and mechanically connecting said sections to the non-working ends of partly used electrodes of similar character.

5. The process of building up selfbaking electrodes provided with metallic armatures and metallic reinforcements which comprises, preparing electrode sections of raw electrode mass enclosed in metallic armatures and provided with metallic reinforcements outside of the furnace in which they are to be employed, and electrically and mechanically connecting the respective armatures and reinforcements of said sections to the corresponding parts of the non-working ends of partly used electrodes of similar character.

6. The process of building up selfbaking electrodes provided with metallic armatures having radial ribs which comprises preparing electrode sections of raw electrode mass enclosed in such metallic armatures outside of the furnace in which they are to be employed, electrically and mechanically connecting the respective armatures and ribs of said sections to the corresponding parts of the non-working ends of partly used electrodes of similar character, and connecting the raw electrode mass of the sections prepared outside of the said furnace with additional raw electrode mass to the electrode mass of the non-working ends of said partly used electrodes.

7. The process of building up selfbaking electrodes provided with metallic armatures having radial ribs which comprises preparing electrode sections of raw electrode mass enclosed in such metallic armatures outside the furnace in which they are to be employed, electrically and mechanically connecting the respective armatures and ribs of said sections to the corresponding parts of the non-working ends of partly used electrodes of similar character, and connecting the raw electrode mass of said sections prepared outside of the said furnace to the electrode mass of the non-working ends of said partly used electrode by means of additional raw electrode mass by the application of heat and pressure thereto.

Signed at New York, N. Y., Sept. 22nd, 1925.

MATHIAS OVROM SEM.

Aug. 30, 1927. 1,640,735

C. W. SÖDERBERG

PROCESS OF MAKING CHANNELED CONTINUOUS ELECTRODES

Filed May 10, 1924

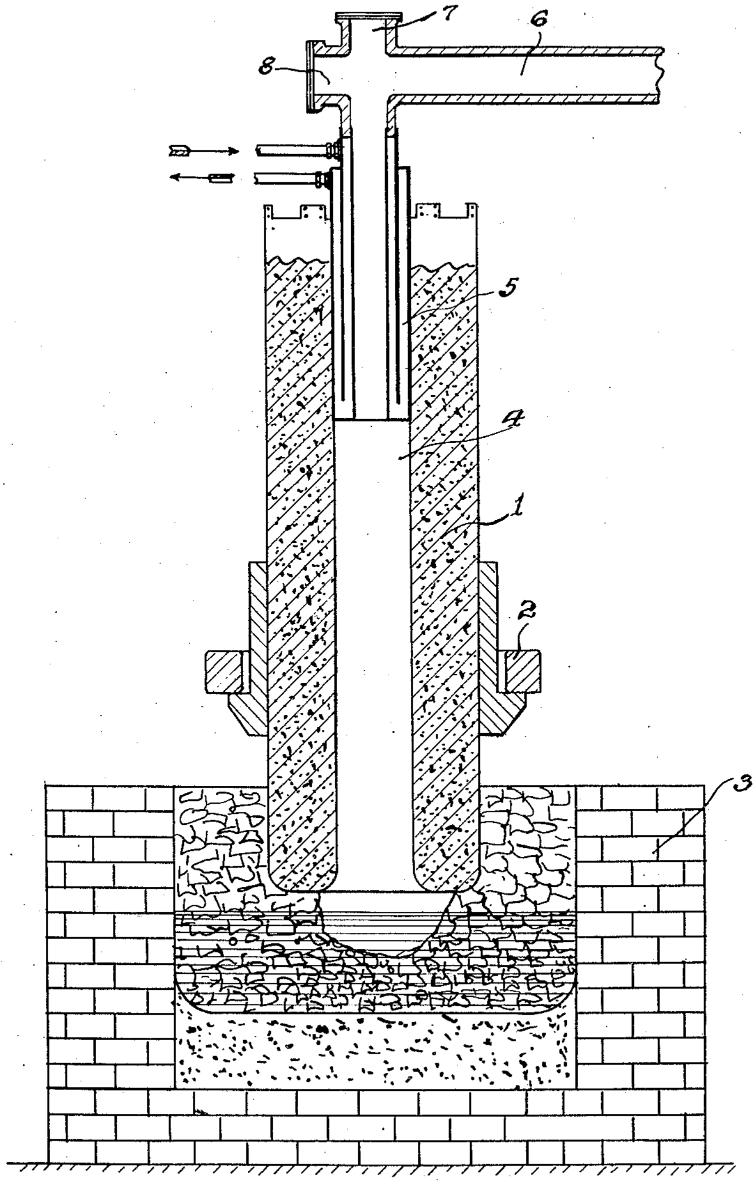

Inventor
Carl Wilheim Söderberg

By Dorsey & Cole
Attorney

Patented Aug. 30, 1927. **1,640,735**

UNITED STATES PATENT OFFICE.

CARL WILHELM SÖDERBERG, OF OSLO, NORWAY, ASSIGNOR TO DET NORSKE AKTIESELSKAB FOR ELEKTROKEMISK INDUSTRIE, OF CHRISTIANIA, NORWAY.

PROCESS OF MAKING CHANNELED CONTINUOUS ELECTRODES.

Application filed May 10, 1924, Serial No. 712,423, and in Norway May 16, 1923.

This invention relates to channeled continuous electrodes for electric furnaces and the object of the invention is a process for making such electrodes whereby first class mechanical and electric qualities are obtained.

In my U. S. Patent No. 1,442,031 I have described a method of producing channeled continuous electrodes. My present process is an improvement of the process described in that patent and is preferable in such cases when very hot gases or charges pass through the electrode.

My present process may be used in connection with any type of electric furnace and the suspension of my electrode may be carried out as desired in each special case. It will especially be advantageous in connection with closed furnaces and makes it possible to carry out therein a number of processes which have hitherto only been carried out in open furnaces, as for instance the production of carbide, and many products which get lost in open furnaces may now be recovered. As an example I may state that a carbide furnace per ton carbide gives about 372 kg. of carbon monoxide which carry along about 204 kg. of dust. Instead of being disagreeable to the neighbourhood of the furnace these products may be recovered by employing my channeled electrode.

In order to carry out my invention I provide a usual continuous selfbaking electrode with one or more longitudinal channels. Such electrodes consist of a lower baked part and an upper unbaked part. I have found that it is essential to the production of a first class electrode to always maintain a part of the electrode in unbaked condition in order to give a homogeneous connection with the new electrode mass to be tamped thereupon. If now in the case of a channeled electrode very hot furnace gases are drawn out through the electrode the upper part of the electrode may become baked by the heat given off from the gases. The same may of course take place if very hot gases are introduced through a channeled electrode. I have now found that this difficulty may be avoided by placing a cooled tube in the channel or channels at the upper end of the electrode. The cooled tube will then protect the surrounding raw electrode mass from being baked. The tube may either be in solid connection with the collecting arrangements for the furnace gas or in solid connection with the electrode and in flexible connection with said collecting arrangement. As the electrode is lowered the unbaked electrode mass outside the tube will follow downwards. Consequently the tube must from time to time be raised if it is in solid connection with the electrode. I may of course also heat insulate such a tube instead of cooling it so as not to bake the surrounding electrode mass.

In the drawing forming part of the application a vertical sectional view of an electrode and furnace used in carrying out my invention is shown:

Referring more particularly to the drawing, 1 is a continuous selfbaking electrode suspended by means of an external holder 2. 3 is an electric furnace, 4 is a longitudinal channel inside the electrode. 5 is a water cooled tube in the unbaked part of the electrode. 6 is the outlet for the furnace gas, 7 and 8 are openings for cleaning the tubes.

When the furnace is in operation a strong draft will on account of the great heat form in the channel 4 acting as a flue and I may now regulate the draft in such manner that the gases formed in the furnace escape without air being drawn in through the furnace. I may if desired regulate the conditions so that part of the gas escapes each way. The regulation may easily be carried out for instance by means of a door or a fan.

It is easily understood which improvements in the operation of the furnace are obtained by the removal of the furnace gas. The great amounts of hot and intensely illuminating gases which are developed in the usual carbide and ferroalloy furnaces form the principal difficulty in the handling of the furnace. By having the gases removed from the furnace through a hollow electrode all drawbacks are eliminated and the furnace is easily and comfortably handled.

The method described is of special importance when smelting materials in powder or with little porosity. Such material is for instance a mixture of powdered iron ore (purple ore or the like) with powdered coke or similar powdered reduction material. Such powdered materials are generally much cheaper than other raw materials. They have, however, the drawback that the charge becomes too tight and impenetrable for gas.

Consequently the furnace "blows", that is, the gas will force its way through the charge at certain places, forming open channels through which it escapes. Little or no contact between gas and material is therefore obtained and neither the heat content nor the reduction value of the gas is utilized. By drawing gas out through the electrode the blowing is avoided and at the same time the gas is collected and may subsequently be utilized for preheating, roasting or reduction of charges which may partly be charged through the electrode channel in counter current with the gases.

A furnace such as that herein described is especially noteworthy on account of the fact that it possesses in combination the advantages of both an open and a closed furnace.

If the furnace gases contain volatile elements as for instance zinc, phosphorus or the like, these may be recovered as usual by leading the gas through a condensing system connected with the furnace.

As previously stated the process herein described may also be employed for blowing gas into the furnace. If desired I may of course also draw gas through the furnace and the electrode. Such procedures may for instance be employed for effecting reaction of a gas with carbon, for instance in the production of hydrocyanic acid.

What I claim as new and desire to secure by Letters Patent of the United States is:

1. The process of making continuous self-baking channeled electrodes for electric furnaces comprising the introduction of a body in the unbaked part of the electrode protecting the surrounding raw electrode mass against the heat from the channel and thus preventing the baking of said raw electrode mass.

2. The process of making continuous self-baking channeled electrodes for electric furnaces comprising the introduction of a tube in the unbaked part of the electrode protecting the surrounding raw electrode mass against the heat from the channel and thus preventing the baking of said raw electrode mass.

3. The process of making continuous self-baking channeled electrodes for electric furnaces comprising the introduction of a cooled tube in the unbaked part of the electrode protecting the surrounding raw electrode mass against the heat from the channel and thus preventing the baking of said raw electrode mass.

4. The process of making continuous self-baking channeled electrodes for electric furnaces comprising the introduction of a water cooled tube in the unbaked part of the electrode protecting the surrounding raw electrode mass against the heat from the channel and thus preventing the baking of said raw electrode mass.

5. A channeled electrode baked in the furnace in which it is used and adapted for the introduction into the furnace or removal therefrom of gas, said electrode comprising when in use a baked portion an unbaked portion and within a part of the unbaked portion means for protecting the raw electrode mass against heat from the channel.

6. A channeled electrode baked in the furnace in which it is used and adapted for the introduction into the furnace or removal therefrom of gas, said electrode comprising when in use a baked portion, an unbaked portion and within said unbaked portion a tube protecting the raw electrode mass against heat from the channel.

7. A channeled electrode baked in the furnace in which it is used and adapted for the introduction into the furnace or removal therefrom of gas, said electrode comprising when in use a baked portion, an unbaked portion and within said unbaked portion a water cooled tube protecting the surrounding raw electrode mass against the heat from the channel and thus preventing the baking of said raw electrode mass.

CARL WILHELM SÖDERBERG.

Jan. 31, 1928.

1,657,948

J. WESTLY

PROCESS IN THE EMPLOYMENT OF SELF BAKING ELECTRODES

Filed Jan. 5, 1925

Fig. I

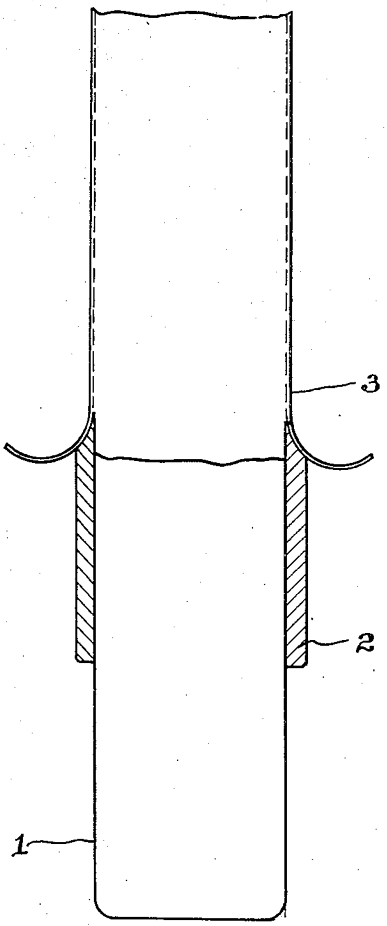

Fig. 2

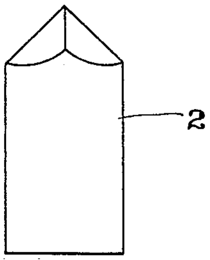

Inventor

Jens Westly

By Dorsey & Cole

Attorney

Patented Jan. 31, 1928. **1,657,948**

UNITED STATES PATENT OFFICE.

JENS WESTLY, OF KRISTIANSAND, NORWAY, ASSIGNOR TO DET NORSKE AKTIESELSKAB FOR ELEKTROKEMISK INDUSTRI OF NORWAY, OF OSLO, NORWAY.

PROCESS IN THE EMPLOYMENT OF SELF-BAKING ELECTRODES.

Application filed January 5, 1925, Serial No. 713, and in Norway January 17, 1924.

"Self-baking" electrodes (electrodes which are baked in the furnace in which they are used) provided with metallic mantle are described in United States Patent No. 1,440,724. The mantle has here the function of acting as a mould during the introduction of the mass, of protecting the electrode against oxidation and transmitting the current to the electrode. It is often desirable to provide the electrode with ribs or similar extensions projecting into the electrode mass and further facilitating the flow of the current. In the use of the electrode the mantle and ribs ordinarily melt in the furnace and the metal contained therein enters into the furnace product.

Usually electrodes contain, according to their size and the current carried, about 4–10% metal, generally iron. The amounts of iron supplied in this way to the furnace are as a rule so small that they do not interfere with the working of the furnace or lower the quality of the product. In some cases it may, however, be of importance to avoid or at least to minimize the introduction of iron, as for instance in using the electrode in furnaces for the production of aluminium in which about 6–700 kg. of electrodes are consumed per ton of aluminium. This would cause the aluminium to take up about 3–3.5% iron from the mantle if the electrode contains 5% iron, and thus the quality of the aluminium produced would be greatly lowered. It is therefore of great importance for the employment of the electrode in these furnaces that a method be found to avoid introduction of considerable quantities of iron or other detrimental metals into the aluminium. This may be accomplished by making the mantle and ribs of aluminium. Iron, however, on account of its high melting point and its cheapness has important advantages as compared with aluminium, wherefore if possible iron would preferably be employed. Applicant has found that this is possible by employing the method hereinafter described, and illustrated in the drawing.

In the drawing Figure 1 represents an elevational view partially in section showing an electrode and holder utilizing the method, and Figure 2 represents an elevational view of a portion of the holder.

The method consists in removing the metal mantle from the electrode before it reaches far enough down into the furnace so that the mantle melts off. It is then desirable to employ a mantle of the smallest possible thickness; for instance with iron plates a thickness of 0·3–0.4 mm. The mantles may then without difficulty be torn or cut away in pieces from the electrode as the electrode during its use is lowered into the furnace. It is desirable to arrange things so that the electrode holder is placed on the baked part of the electrode as far as possible. Whether this is possible depends on the temperature in the furnace, size of the electrode and the current carried. Under favourable circumstances the heat may, if conditions are rightly chosen, be drawn so high up in the electrode that it is already sufficiently baked before it enters the holder and the mantle may be removed there. Otherwise the mantle may be conveniently removed at the lower edge of the electrode holder, for instance in the form of strips 5–10 cm. broad. To facilitate the tearing off, arrangements may be made to give a sharp lower edge to the electrode holder, thus causing it to act as a knife. Further the mantle may be scored horizontally at intervals of 5–10 cm., to facilitate the tearing operation. The tearing operation may preferably be repeated each time the holder is moved.

In the application of the self-baking electrodes herein referred to it is often advantageous to employ ribs. These can, however, only with difficulty be removed by tearing off and as far as the ribs are concerned one has the choice between letting the amount of iron or other detrimental metal corresponding to the length of the ribs pass into the furnace, or making the ribs of aluminium or other non-detrimental metal or metal alloy. To be able to employ iron in the ribs the size of the ribs must then in aluminium furnaces be reduced to the minimum. Preferably the holder is as far as possible placed on baked carbon, giving the most direct passage of the current from mantle to the electrode mass below the holder without passing through the ribs. The ribs may therefore be greatly reduced and in practice it has been possible to reduce the amount of iron in the ribs so much that the aluminium produced only takes up 0.05–0.1% iron from the ribs even if these are allowed to melt down and entirely enter the aluminium. As an example it may be mentioned that an electrode with 1 meter diameter and for a capacity of 1 ampere per square centimeter was made with 8 ribs 7 centimeters broad. Both ribs and mantle were of 0.3 mm. plate. The mantle was during its use removed before it entered into the bath. But the ribs were allowed to melt and enter the metal produced, which thus took up 0.074% iron.

In the cases when the mantle is removed before it gets down into the gripping members of the holder these may be so made as to scale off the metal mantle. For instance as shown in the appended drawing. 1 is the electrode, 2 is a part of the holder and 3 shows the mantle which is forced out from the electrode by means of plough-shaped holder parts. The mantle parts which are forced out may be torn or cut away or allowed to burn off.

The metal mantle will always stand out a little from the electrode when this is baked. The electrode shrinks during the baking and the metal mantle expands. If the metal mantle is thin beforehand it will also be more or less oxidized and brittle so it may easily be scaled off against the sharp upper edge of the gripping members of the holder when the electrode is lowered.

Together with the mantle the detrimental layer of dust is also removed thus giving a clean contact between gripping members and electrode.

I claim:

1. In the process of manufacturing and using self-baking electrodes, where the electrode is formed and baked within a protecting metal mantle, the step comprising from time to time removing portions of the mantle from the baked end of the electrode before such portions become melted.

2. In the process of manufacturing and using self-baking electrodes, where the electrode is formed and baked within a protecting metal mantle, the step comprising from time to time removing portions of the mantle from the baked end of the electrode in such a manner as to reduce the amount of foreign metal entering the furnace, and at the same time protect the electrode during the baking period.

3. In the process of manufacturing and using self-baking electrodes, where the electrode is formed and baked within a protecting metal mantle, the step comprising removing a portion of the mantle above the point where it would melt and enter the furnace charge.

4. In the process of manufacturing and using self-baking electrodes, where the electrode is formed and baked within a protecting metal mantle, the step comprising removing a portion of the mantle below the electrode holder and above the point where it would melt and enter the furnace charge.

JENS WESTLY.

Patented May 15, 1928. **1,670,052**

UNITED STATES PATENT OFFICE.

CARL WILHELM SÖDERBERG, OF OSLO, NORWAY, ASSIGNOR TO DET NORSKE AKTIESELSKAB FOR ELEKTROKEMISK INDUSTRI OF NORWAY, OF OSLO, NORWAY.

ELECTRODE MASS FOR SELF-BAKING ELECTRODES.

No Drawing. Application filed July 22, 1924, Serial No. 727,597, and in Norway July 25, 1923.

The present invention relates to the so-called continuous electrodes, which are baked in the electric furnace in which they are used and the object of the invention is to provide an improved electrode mass from which an electrode is obtained having first class mechanical and electric qualities.

The usual carbon electrodes for electrothermic use are, as is known, made by mixing anthracite, previously heated to a red heat, cinders and other carbon materials with a binder, comprising pitch with some oil, or tar and pitch, to form a mass which is pressed or tamped into moulds. The electrodes thus formed are then baked in special baking furnaces where they are slowly heated until the binder is coked, usually to 1100° C.

It is well known that good electrodes are essential to an electric smelting furnace. Much work has been done in the effort to find the best methods for the production of electrodes and the following fundamental rules, which must be followed to obtain a first class result, have been established:

1. The raw electrode should contain the least possible amount of volatile constituents. The less volatile constituents there are contained in the electrode mass, the higher will be the specific gravity of the electrode.
2. The moulding of the electrode must be effected by means of high pressures or powerful blows whereby the particles of the mass are pressed together and the air contained is driven out.

The method which is usually employed and which is considered to be the best is to press the electrodes in hydraulic presses, employing pressures of about 300 kg. per square centimeter. The electrode mass is subjected to this high pressure for a long time and thereby the particles of the mass are displaced relatively to each other and the air is driven out.

Also by tamping one has been able to make good electrodes. The process then consists in subjecting the electrode mass to a tamping by means of a ram-like tamping apparatus. Both with regard to the transportation and the baking of the raw electrodes and to make the mechanical treatment of the mass effective the electrode mass must have a definite consistency. It must as it is termed be able to "take pressing" and "take tamping". The mass must be treated mechanically in such a way that a solid and non-elastic electrode block results which shows a specific gravity corresponding to that which it is desired to obtain in the finished electrodes.

Applicant has, however, found that the mass which is used in the production of the so-called selfbaking electrodes must have a consistency quite different from usual mass to give a satisfactory result, it being usually impossible to employ high pressures for pressing the mass, or powerful tamping. Only a light tamping may be used, effected either manually or by means of small pneumatic tamping devices. If it is attempted to tamp usual electrode mass in this way it will not be possible to force the mass sufficiently together and an electrode results with lower specific gravity than usual electrodes, and the coherence and electric conductivity will be bad. This has the effect, that the electrodes stand less current density than first class electrodes and may in many cases lead to breakage, the electrodes not being strong enough to stand the strains to which they will be subjected. This behaviour is especially noticeable in the production of selfbaking electrodes which are provided with an iron- or metal armature. Such electrodes generally consist of an iron mantle with inwardly directed radial longitudinal ribs and this armature encloses the electrode mass and determines its form. In the lower part of the armature facing the furnace the electrode mass will be ready baked, in the upper part it is entirely raw.

The ribs transmit the current from the electrode holder to the baked part of the electrode and hold this tight for which reason they are provided with projections or the like which prevent the hard baked electrode from moving relatively to the ribs. Such a continuous electrode is generally 4 to 7 meters long.

Even if in using ordinary electrode mass for such electrodes it is possible by extremely accurate tamping to reach the right specific gravity of the electrode, the resulting electrodes will nevertheless not be so reliable as desired. When subjected to special strains electrode breakage may occur. The electrode divides up in pieces of 30 to 90 centimeters length which fall into the furnace when the iron armature is melted away.

The reason for this is that the electrode mass during the tamping gradually hardens as the carbon particles are worked together. The resulting hard non-electric mass is fixed relatively to the ribs of the iron armature which it envelops and to the other parts of the iron armature. As the electrode is consumed in the smelting furnace the armature is moved slowly downwards together with the electrode mass. A little above the furnace the electrode is heated to baking temperature and the mass shrinks, the binder being coked. The iron armature, however, expands on account of the rise in temperature and the electrode mass fixed to the armature is subjected to a strain which may result in a division of the electrode into pieces whose length varies with the electrode diameter and temperature conditions.

I have now found that the difficulties heretofore pointed out may be overcome by giving the mass a consistency with sufficiently low viscosity to allow the mass to settle during the heating in the electrode. To reach the right specific gravity and corresponding electric conductivity and mechanical qualities the mass must during the baking make a slow settling possible. The baking takes place in a mass subjected to pressure from the column of mass above. I obtain a suitable consistency by increasing the content of liquid constituents in the mass. The ordinary electrode mass for large electrodes generally contains a mixture of tar and pitch (for instance in the proportion 3 tar: 1 pitch) constituting 10 to 11% of the mass and is then easily tamped to a hard mass. If now the amount of tar-pitch is increased the mass will become more sticky at the tamping temperature and consequently difficult to treat with the tamping machine. At 18 to 22% tar-pitch it cannot be tamped at all. The treatment of one part of the surface of the mass with a machine for instance a pneumatic tamper with point only results in pressing down this part of the surface and raising the others. The consistency of the mass is that of a dough and the object of the tamping is in this case not to beat the mass together to attain a high specific gravity as in the case of ordinary pressed or tamped electrodes but only to bring the single portions of mass into intimate contact with each other and remove greater air bubbles.

My investigations have shown that such a mass has at the lower part of the continuous electrodes a considerably higher specific gravity than newly tamped mass in the upper part of the electrode. Samples of a ready baked electrode taken out from the lower end of a selfbaking electrode have the same specific gravity as the best pressed electrodes of the trade. This shows that a slow settling of the mass takes place while it is in the electrode subjected to heat from the smelting furnace and charged with the weight of the mass above.

The difference between "tampable" and "non-tampable" mass is very apparent. Tampable mass subjected to a series of blows from a tamper becomes harder at each blow. At last the tamper strikes the mass with a sound as if striking a perfectly solid, non-elastic body. In a non-tampable mass such solidity is never obtained. In order to make clear how the change in consistency takes place when increasing the amount of liquid binder I have carried out comparative measurements of viscosity in a series of mixtures of finely pulverized anthracite and a liquid binder. The viscosity was determined by noting the number of seconds required for a rod of definite weight to move through a layer of mass of definite thickness. The results are given below:

At 24% binder the movement of the rod was not noticeable.

At 25% binder the movement of the rod was noticeable, but the time required was more than 1 hour.

At 26% binder the movement of the rod was a little quicker, but the time required was still more than 1 hour.

At 27% binder time still more than 1 hour.

Amount of binder: 27.5%, 28%, 28.5%, 29%, 30%, 32%.

Time required: 760, 100, 65, 58, 39, 20 seconds.

If the results are entered into a curve it will be seen, that the curve makes a sharp turning at 27.5 to 28% binder. This sudden change in the movability of the mass apparently corresponds to such a content of liquid that the solid carbon particles of the mass are no longer directly in touch with each other, but slide on the "lubricant", the binders used in electrode production being at the same time excellent lubricants.

The absolute percentage at which the mass ceases to be tampable depends on the amount of fine particles in the electrode mass and on the nature of the fines, and can therefore not be determined beforehand. In the investigations referred to above the "turning point" of the curve was found to be at 27.5% binder. This is of course only the case in a mixture of definite fines with a definite binder. If the quality or fineness of the fines are altered the "turning point" will become displaced. Under all circumstances, however, a curve for the viscosity is obtained giving a "turning point" at the content of binder at which the mass becomes noticeably "liquid".

In electrode mass for big electrodes generally ⅓ coarse particles are employed, that is a carbon material, for instance heated anthracite, in form of pieces having the size of a nut, ⅔ of the mass being fines and binders. The coarse particles require very little binder to become moistened. The pieces are in the mass completely surrounded by fines on all sides and the consistency of the fines determines that of the mass. Practical experiments on a great scale now show, that the characteristic change in consistency by employment of the same material as in the experiments previously referred to, but with about ⅓ of coarse particles takes place at about 18% binder, and at 20% the mass is very movable. These figures are in good accordance with those found above it being considered that ⅓ of the mass requires very little binder. If more coarse particles are employed the change takes place at a lower content of binder. The mass is always treated in warm condition, generally at temperatures ranging from 60 to 100° C. The mixture of binders used in practice is then liquid.

By making the content of volatile constituents and binder in the mass sufficiently high tamping of the mass may be avoided altogether and the production of the continuous electrodes more takes the character of a casting. But also in such cases an excellent conductivity and specific gravity is attained in the finished electrodes, this being due to the exceedingly favorable baking conditions.

As mentioned above the iron mantle moves slowly downwards together with the electrode mass towards the crater of the furnace, the temperature of the mass rising slowly from about 60° C. to a bright red heat at the point of the electrode. At about 200° C. the first distillation of the most volatile constituents of the mass begins and these escape in the form of vapor. At about 700° C. the binders are transformed to high-molecular carbon compounds which are slowly transformed to a gradually harder coke. Thereby the porosity of the electrode is increased. The raw mass during the tamping still contains some air, but during the storing in the electrode a part of the air escapes and the porosity sinks to about 5%. In the completely baked electrode it is about 15 to 20%. I have found that during the distillation and coking the excess of binder will together with the distillation products try to escape downwards through the already baked and consequently most porous part of the electrode, but as just this part is heated to a red heat new amounts of carbon-hydrogen compounds will here continually be reduced, coke being formed and deposited in the pores of the electrode. The carbon particles consequently become further bound together, and the weight and conductivity of the electrode increases.

The foregoing detailed description has been given for clearness of understanding only and no undue limitation should be deduced therefrom but the appended claims should be construed as broadly as permissible in view of the prior art.

What I claim as new and desire to secure by Letters Patent of the United States is:

1. An electrode mass for use in forming continuous electrodes, containing an excess of binder in proportions sufficiently high to cause the mass in warm condition to settle in the electrode.

2. An electrode mass for use in forming continuous electrodes, in which the proportion of binder content is sufficiently high to render the mass elastic and non-tampable.

3. An electrode mass for use in forming continuous electrodes, in which the proportion of binder content is sufficiently high to prevent reduction of the total volume of the mass under a tamping action.

4. An electrode mass for use in forming continuous electrodes, in which the proportion of binder content is sufficiently high to render the mass liquid.

5. An electrode mass for use in forming continuous electrodes, in which the binder content forms at least 14% of the mass.

6. The process of forming an electrode baked in the furnace in which it is used, and including an enclosing mantle comprising the steps of forming an electrode mass having a binder content sufficiently high to render the mass elastic and non-tampable and then casting the mass within the enclosing mantle of the electrode.

7. The process of forming an electrode baked in the furnace in which it is used and including an enclosing mantle comprising the steps of forming an electrode mass having a binder content sufficiently high to render the mass liquid, and then casting the mass within the enclosing mantle of the electrode.

8. The process of forming an electrode baked in the furnace in which it is used, and including an enclosing mantle comprising the steps of forming an electrode mass having a binder content of at least 14% of the mass and then casting the mass within the enclosing mantle of the electrode.

9. An electric furnace electrode of the kind which is baked during its use in any electric furnace characterized by a baked portion at the operating end and by soft electrode paste at the feeding end, said paste being of such consistency as automatically to exert sufficient pressure by its own weight to assure such compactness of the electrode materials throughout the baked portion of the electrodes as to afford physical and electrical characteristics of a pre-baked electrode.

CARL WILHELM SÖDERBERG.

Oct. 2, 1928. 1,686,474

C. W. SÖDERBERG

SELF BAKING ELECTRODE

Filed Sept. 18, 1926

Fig. 1.

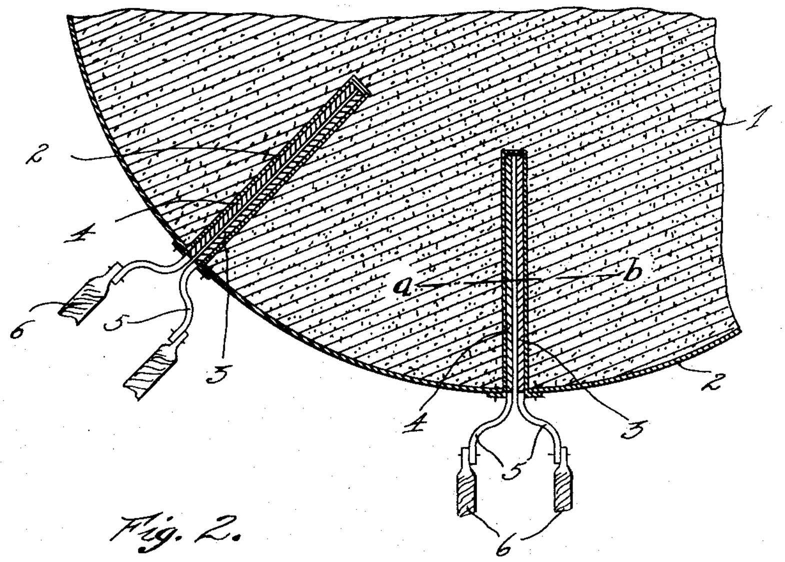

Fig. 2.

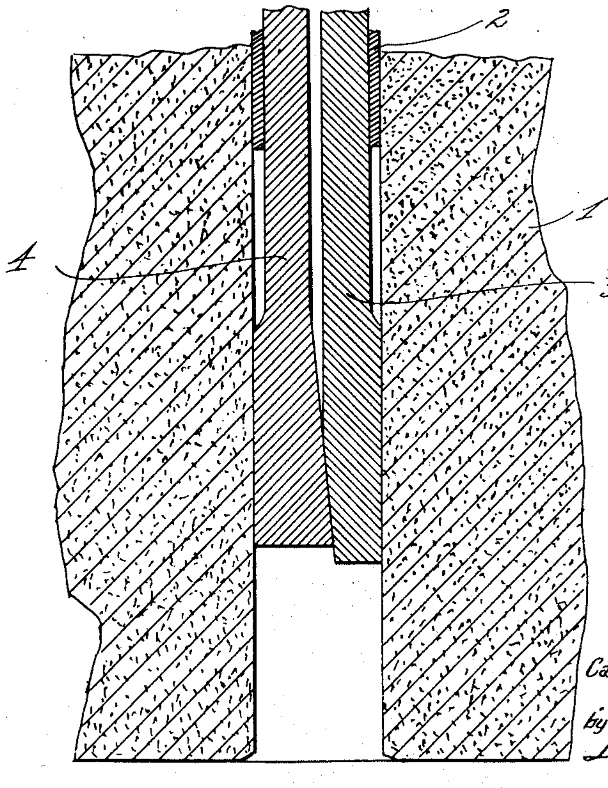

Inventor.
Carl Wilhelm Söderberg
by

Attorneys.

Patented Oct. 2, 1928. **1,686,474**

UNITED STATES PATENT OFFICE.

CARL WILHELM SÖDERBERG, OF OSLO, NORWAY, ASSIGNOR TO DET NORSKE AKTIESELSKAB FOR ELEKTROKEMISK INDUSTRI OF NORWAY, OF OSLO, NORWAY.

SELF-BAKING ELECTRODE.

Application filed September 18, 1926, Serial No. 136,275, and in Norway September 19, 1925.

The so-called self-baking electrodes, i. e. electrodes that are baked while in use in the electric furnace, ordinarily consist of one baked and one unbaked part and means will have to be provided for conducting the electric current to the baked part of the electrode. A present this is ordinarily made according to my U. S. Patent No. 1.440,724 dated January 2nd, 1923, by surrounding the electrode by a metallic shell structure consisting of a metal mantle provided with inwardly projecting ribs that give a good electrical contact. Both casing and ribs pass into the furnace as the electrode is consumed and become a part of the charge. In many instances the presence of this metal, which on account of the high temperature required to properly bake the electrode is generally iron, is not objectionable. However, where the continuous self-baking electrodes are to be used in the electrolytic production of aluminum and in similar cases, the addition of iron from the electrode is very objectionable as it renders the aluminum impure. For this reason as much as possible of the shell structure may be made of aluminum, but inasmuch as the aluminum melts at a temperature considerably below that at which the electrode has attained a reasonably good electrical conductivity, the use of aluminum for the whole shell has met with difficulty so that the internally projecting ribs are now generally made of iron or other comparatively difficultly fusible metal (U. S. Pat. 1,679,284 of Jens Westly), which remains solid and conducts the current to a point far enough down in the electrode so that the voltage losses in the electrode do not become too large a factor in the power consumption of the furnace. These inwardly projecting ribs, however, although very thin, introduce an appreciable and undesired amount of iron into the aluminum produced.

The object of the present invention is to provide a shell structure for a self-baking electrode, in which the mantle—if any—may be made of an easily fusible metal such as aluminum and the ribs may be made of a difficultly fusible metal such as iron, where the ribs may be given a sufficient cross-section so that the voltage loss in them is materially reduced as compared with that in the ribs previously employed, and where the metal in these ribs is not permitted to enter the furnace and contaminate the product. This is accomplished by separating the ribs from the shell so that they are mechanically independent of each other and may be displaced with relation to each other, especially in a direction parallel to the axis of the electrode. Thereby the ribs are converted into special contacts inserted into or in other ways brought in contact with the baked part of the electrode. If a metallic mantle is used, which encloses and shapes the electrode, the same may therefore pass into the furnace with it, while the ribs may be so arranged that they carry a large part of the current to the thoroughly baked lower portion of the electrodes, but are not permitted to be fed into and consumed in the furnace. Thus the mantle may be made of an easily fusible metal, such as aluminum, and the ribs of a more difficultly fusible metal such as iron, without contaminating the furnace product with the difficultly fusible metal. Since the invention is of particular importance in the use of the continuous self-baking electrode for the production of aluminum by the electrolyses of its oxide in a molten bath, the example chosen for description will refer particularly to such an electrode, although it should be clearly understood that the invention is also applicable to other cases where similar requirements have to be met.

In the attached drawing Fig. 1 shows a horizontal section through an electrode in which this invention is embodied, and Fig. 2 shows an enlarged vertical section along the line *a—b* of Fig. 1.

In these drawings 1 is electrode mass, 2 is an aluminum mantle which, as will be seen, is bent inwardly into the electrode mass to give room for the ribs 3 and 4, which are of iron. The ribs have an externally extending portion 5 where the electric cables 6 may be connected. As appears from Fig. 2 the ribs are made of two parts 3 and 4, which are wedge-shaped in such a way that a blow on one part of the rib will cause the ribs to be wedged against the surrounding material and consequently make a good electrical contact. It is most advantageous to arrange the shell so that the lower ends of the iron ribs are so close to the fused bath that the aluminum mantle is melted off at this point. The ribs will then be attached directly to the already-baked electrode mass and loss of voltage is thus practically avoided. The ribs are made so long that they project above the upper end of the mantle. When the lower end of the rib approaches the melt, the rib is loosened by a blow on one part of its upper end and the whole rib is pulled upwards a suitable distance. It is thus possible to move one rib at a time and the operation of the furnace may at all times be continued without disturbance. The mantle is made from sections which are previously formed and placed in the position shown with reference to the ribs, and joined to each other by welding. The tamping of the electrode mass takes place as is usual with self-baking electrodes and the electrode may be supported in any known way. The ribs should be suspended from their upper part. The lower end of the ribs will always take the temperature of the electrode at this point, that is about 900° C. and must therefore be provided with a non-oxidizable coating of ferrochromium or the like. To get the best possible contact the ribs may increase in thickness, both towards their lower end where the aluminum mantle melts, and inwardly towards the axis of the electrode. The supply of current may of course take place in the usual manner through the carrying mechanism of the electrode as well as through the ribs. If desirable, the mantle may of course be provided with projections or the like to provide better attachment for the electrode mass.

Obviously the mode of application of the present invention may be varied within wide limits and the above example therefore is not intended to limit the invention.

Claims:

1. The combination of an electrode baked while in use in the electric furnace, an electrode holder, and a current-carrying contact movable relatively to the electrode and the electrode holder.

2. The combination with an electrode baked while in use in the electric furnace, of a metallic current-carrying contact extending into the electrode beyond the periphery thereof and movable relatively to the electrode.

3. The combination with an electrode baked while in use in the electric furnace, of a plurality of current-carrying contacts extending into the electrode beyond the periphery thereof, such contacts being movable relative to each other.

4. The combination with an electrode baked while in use in the electric furnace, of a current-carrying contact extending into the electrode beyond the periphery thereof, such contact comprising parts relatively displaceable with respect to each other, and adapted when so displaced to engage the electrode to make contact therewith.

5. The combination with an electrode baked while in use in the electric furnace, of a current-carrying contact extending into the electrode beyond the periphery thereof, such contact comprising a plurality of movable wedge-shaped parts.

6. The combination with an electrode baked while in use in the electric furnace, of a metallic current-carrying contact extending into the electrode beyond the periphery thereof and movable relatively to the electrode, the lower portion of such contact being provided with a non-oxidizing coating.

7. The combination with an electrode baked while in use in the electric furnace, of a current-carrying contact extending into the electrode beyond the periphery thereof, such contact comprising a plurality of relatively movable parts suspended from their upper ends.

8. The combination with and electrode baked while in use in the electric furnace, of a current-carrying contact extending into the electrode beyond the periphery thereof and movable relatively to the electrode, and an electric lead directly connected with such contact.

9. A metal shell for an electrode baked while in use in the electric furnace characterized by the fact that it comprises a plurality of mechanically distinct parts movable relatively to each other.

10. A metal shell for electrodes baked while in use in the electric furnace comprising a mantle containing the electrode mass, and ribs displaceable with respect to the mantle.

11. A metal shell for electrodes baked while in use in the electric furnace comprising a mantle containing the electrode mass and ribs displaceable with respect to the mantle, the mantle being made of a relatively easily fusible metal and the ribs being made of comparatively difficulty fusible metal.

12. A metal shell for electrodes baked while in use in the electric furnace comprising a mantle containing the electrode mass, and ribs displaceable with respect to the mantle, the mantle being made of aluminum and the ribs being made of iron.

13. A metal shell for electrodes baked while in use in the electric furnace, comprising an aluminum mantle containing the electrode mass, and a movable iron rib comprising parts relatively displaceable with respect to each other and adapted when so displaced to engage the electrode to make contact therewith.

14. A metal shell for an electrode baked while in use in the electric furnace comprising an aluminum mantle, and an iron current-carrying contact extending into the electrode beyond the periphery thereof, such contact comprising a plurality of wedge-shaped parts.

15. A metal shell for an electrode baked while in use in the electric furnace compris-

ing a mantle made of a relatively easily fusible metal, and a current-carrying rib of comparatively difficulty fusible metal extending into the electrode beyond the pehiphery thereof, the lower part of such rib being provided with a non-oxidizable coating.

16. A metal shell for an electrode baked while in use in the electric furnace comprising a mantle of one composition, and a rib movable relatively to the mantle and made of another composition, the rib being suspended from its upper end.

17. A metal shell for an electrode baked while in use in the electric furnace comprising a mantle of a relatively easily fusible metal and ribs displaceable with respect to the mantle and made of a comparatively difficultly fusible metal, and electric leads directly contacting with such ribs.

CARL WILHELM SÖDERBERG.

Nov. 13, 1928. 1,691,505

M. WALTHER

ELECTRODE

Filed May 14, 1926

Fig. 1.

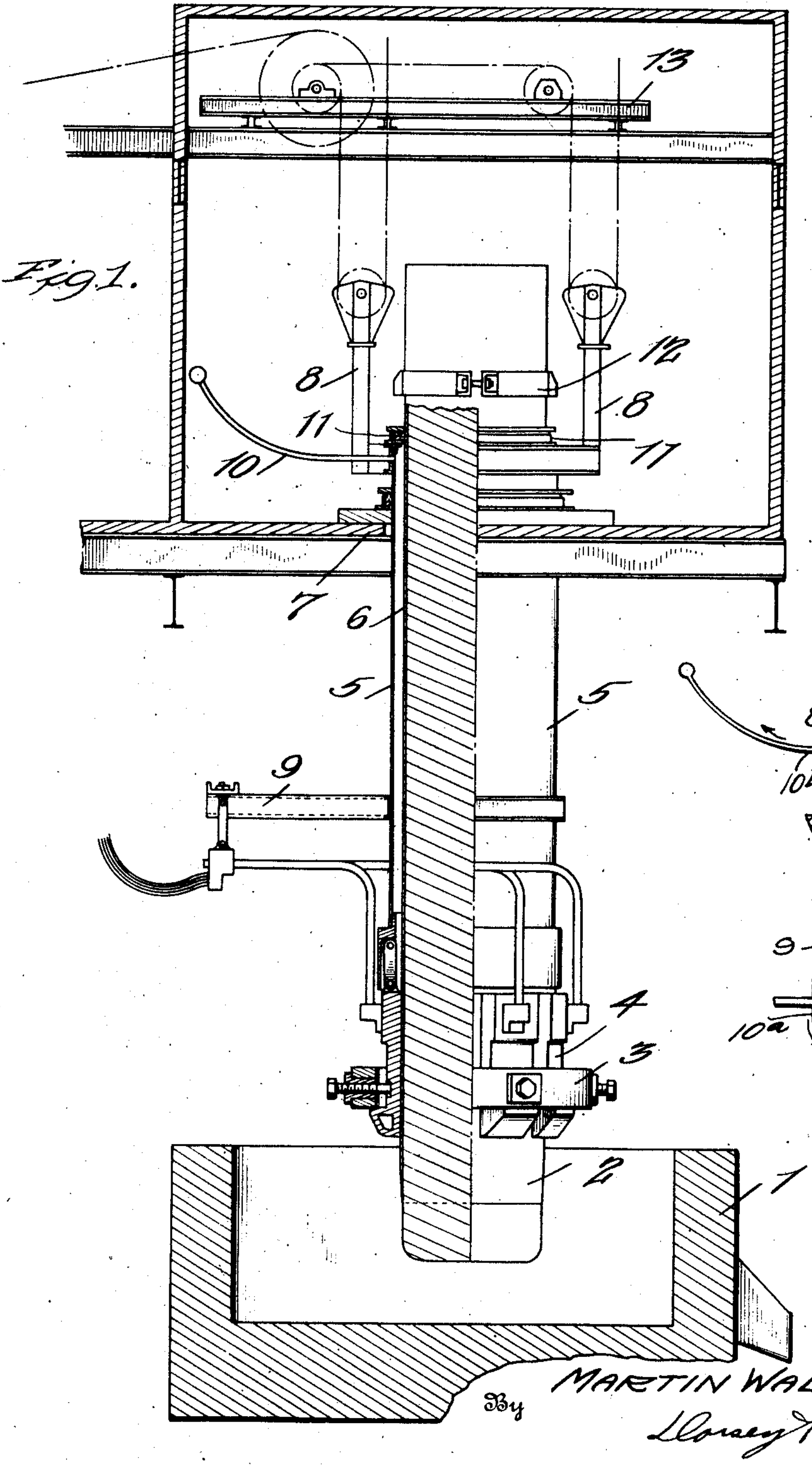

Fig. 2.

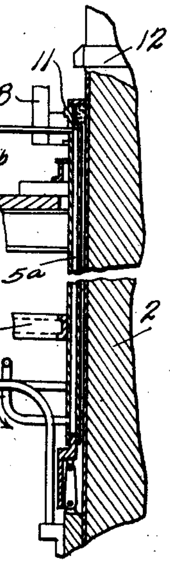

Inventor

MARTIN WALTHER,

By Dorsey & Cole

Attorney

Patented Nov. 13, 1928. **1,691,505**

UNITED STATES PATENT OFFICE.

MARTIN WALTHER, OF OSLO, NORWAY, ASSIGNOR TO DET NORSKE AKTIESELSKAB FOR ELEKTROKEMISK INDUSTRI, OF OSLO, NORWAY.

ELECTRODE.

Application filed May 14, 1926, Serial No. 109,190, and in Norway May 15, 1925.

The present invention relates to electrodes, which are baked in the furnace in which they are used and has for its object the arrangement of a casing around the electrode outside the mantle which is used as a mould for the electrode during the tamping. Thus the casing does not follow the electrode down into the furnace and the electrode must be able to slide down through the casing. It will often be advantageous to make the casing with double walls affording opportunity of artificial cooling either with a liquid or with cold air.

The arrangement of such a casing outside the electrode affords many important advantages. The electrode is protected against dust and the contact surfaces for introduction of current will always keep clean. On account of the cooling effect of the casing the electrode mass in the upper part of the electrode will remain raw and a homogeneous connection is thus obtained when new mass is tamped on the electrode. This is very important as it is impossible to obtain a good connection by tamping raw electrode mass on partly baked mass. By being able to keep the electrode mass above the holder entirely raw by means of such a casing it will be possible to employ the continuous electrode in open furnaces without building a tamping house around its upper end. The building up of the electrode may then take place outside the furnace and the electrodes installed as is done with ready baked electrodes. If desirable the casing may be made in the form of two or more telescopic tubes whereby the length of the casing may be varied as desired. Further the casing may be used for suspension of the electrode, by attaching the suspending device to the upper part of the casing which is generally supplied with a stuffing box. In the event the electrode is built up above or in connection with the furnace in which it is employed, the suspending means may be erected in the tamping house. By such arrangement pulleys for suspension, bearings and wires are protected from the heat of the furnace. The suspension-devices are mounted on a frame which may be displaced horizontally along or across the furnace. Thereby a very simple means of altering the position of the electrode within the furnace is obtained. It is of importance thus to be able to displace the electrode simply and quickly when electrical conditions of the furnace or the composition of the charge make it necessary. If the tamping house is present provision must be made for this lateral movement of the electrode by making the electrode hole in the tamping house floor sufficiently large.

Means may be provided for preventing the electrode from sliding too far and short-circuiting the furnace when the gripping members are loosened to displace the holder relatively to the electrode. For example a stopping ring may be fastened around the electrode at a distance above the uppermost edge of the casing corresponding to the maximum allowable "drop" of the electrode.

When the electrode holder is loosened to lower the electrode the stopping ring will move with the electrode and stop its movement by striking against the stuffing box of the casing. After the electrode is again gripped by the holder, the stopping-ring is loosened and placed higher up on the electrode ready for the next "drop."

Generally it will be advantageous to make the casing of iron plate.

The electrode holder may be made in known way and any type of electrode holder may be employed. It is, however, generally preferred to employ a holder which is so constructed that the electrode may be lowered during full operation without breaking the current. Such a holder is for instance described in U. S. Patent No. 1,498,582.

An example of the invention is illustrated in the drawing forming part of this application. In such drawing

Fig. 1 represents an elevational view, partly in section, of a furnace installation incorporating one form of the invention.

Fig. 2 represents a view similar to Fig. 1, parts being broken away, illustrating another form of the invention.

Referring more particularly to the drawing, 1 is an electric furnace, 2 is a self-baking electrode, and 3 is a ring having means for tightening each single electrode gripping member 4. The gripping members are suspended in the lower end of the casing 5 which is placed outside the actual electrode mantle 6 and is led through the floor of the tamping house 7 and at its upper end is fastened to the suspension arrangement 8 which may be raised and lowered in known manner. 11 is the stuffing box at the upper end of the casing, against which the stopping ring 12 may engage when the electrode has moved through its maximum "drop." The displacable frame is indicated at 13. To the casing 5 is fastened a carrier arrangement 9 for the electric leads conducting current to the electrode. Air or other cooling gas for cooling the casing is admitted near the upper end thereof as indicated at 10. When the air is blown in it penetrates downwards between the electrode mantle 6 and the protecting casing 5 and passes out at the lower end of the casing. If it is desired to cool by means of a liquid the casing must of course be made with a double wall as illustrated at 5^a, Fig. 2, and special inlet and outlet for the cooling fluid provided, as illustrated at 10^a and 10^b, respectively, Fig. 2.

The foregoing detailed description has been given for purposes of clearness of understanding only and no undue limitation should be deduced therefrom but the appended claims should be construed as broadly as permissible in view of the prior art.

What I claim as new and desire to secure by Letters Patent of the United States is:

1. The combination of an electrode baked while in use in the electric furnace, and having a mantle enveloping the electrode mass, an electrode holder, and a casing surrounding and spaced from the mantle, and arranged above the electrode holder, the mantle together with the electrode therein contained being movable longitudinally with respect to the casing.

2. The combination of an electrode baked while in use in the electric furnace and having a mantle enveloping the electrode mass, a room wherein the tamping of the electrode mass into the mantle is effected, and a casing surrounding the electrode in spaced relation thereto, the upper end of said casing being located in said room.

3. The combination of an electrode baked while in use in the electric furnace and having a mantle enveloping the electrode mass, a casing surrounding and spaced from the mantle, and means for introducing cooling media between the mantle and casing.

4. A selfbaking electrode comprising a mantle enveloping the electrode mass and a casing outside said mantle and above the electrode holder, said casing being provided with a double wall and inlet and outlet for cooling fluid, the mantle with the electrode mass therein contained being movable longitudinally with reference to the casing.

5. The combination of an electrode, a casing spaced from and surrounding the electrode, and an electrode holder suspended from the casing and engaging the electrode below said casing.

6. A selfbaking electrode comprising a mantle enveloping the electrode mass and a casing outside said mantle said casing having suspension devices mounted on a frame displaceable in all directions transversely with respect to the axis of the electrode.

7. A selfbaking electrode comprising a mantle enveloping the electrode mass and a casing outside said mantle, said mantle having a stopping ring which stops the downward movement of the electrode when reaching the upper end of the said casing in which the electrode is suspended.

8. The combination of an electrode, a casing surrounding and spaced from the electrode, said electrode being movable longitudinally with respect to the casing, and means for introducing a cooling media between the electrode and casing.

9. The combination of an electrode baked while in use in the electric furnace, a casing surrounding the electrode and subject to the action of a cooling medium to thereby cool the electrode, means whereby the casing may be raised and lowered, and means carried by the casing for suspending the electrode therein, such electrode being movable longitudinally with respect to the casing.

10. The combination of an electrode, a fluid cooled casing surrounding the electrode, means for raising and lowering the casing, and a holder suspending the electrode within the casing, such holder being carried by the casing.

11. The combination of an electrode baked while in use in the electric furnace and having a mantle, a casing surrounding the mantle and forming therewith a space for cooling medium, and means for introducing cooling medium to the space for cooling the electrode.

12. The combination of an electrode baked while in use in the electric furnace, a casing surrounding the electrode, means for introducing cooling medium between the electrode and the casing, and means carried by the casing for suspending the electrode therein.

13. The combination of an electrode, a casing surrounding the electrode and subject to the action of a cooling medium to thereby cool the electrode, and a holder suspending the electrode within the casing, such holder being supported by the casing.

14. The combination of an electrode, a casing surrounding the electrode and with respect to which the electrode is longitudinally adjustable, means for raising and lowering the casing, and a holder carried by the casing for supporting the electrode.

MARTIN WALTHER.

Aug. 6, 1929. M. O. SEM 1,723,582

ELECTRODE FOR ELECTRIC FURNACES

Filed April 7, 1927

Fig. 1.

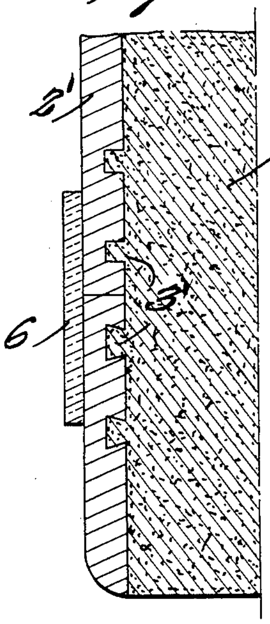

Fig. 2.

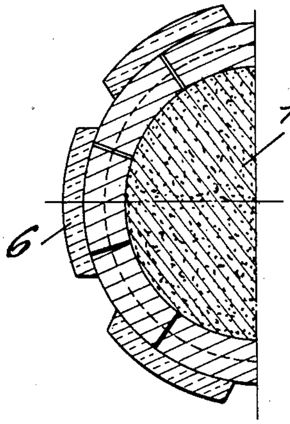

INVENTOR.
M. O. SEM

BY

ATTORNEY.

Patented Aug. 6, 1929. **1,723,582**

UNITED STATES PATENT OFFICE.

MATHIAS OVROM SEM, OF OSLO, NORWAY, ASSIGNOR TO DET NORSKE AKTIESELSKAB FOR ELEKTROKEMISK INDUSTRI OF NORWAY, OF OSLO, NORWAY.

ELECTRODE FOR ELECTRIC FURNACES.

Application filed April 7, 1927, Serial No. 181,821, and in Norway April 7, 1926.

The present invention relates to the so-called self-baking electrodes, that is electrodes which are baked while in use in the electric furnace. These electrodes consist of a lower part where the electrode mass is baked and is a good conductor and an upper part where the mass is raw and non-conductive. To secure a good transmission of current from the current supplying devices to the baked part of the electrode special precautions must be taken and several modes of application thereof have previously been described, for instance in U. S. Patent No. 1,441,037 and No. 1,440,724, where various conductive ribs and inserts have been shown. Such inserts may consist of metal or of ready baked pieces of carbon or graphite.

These inserts may be embedded in the electrode mass in different ways, but I have found that in many cases it is advantageous to arrange them at the periphery of the electrode in such manner that they are directly in touch with the current-carrying contacts or the part of the electrode casing inside said contacts, if an electrode casing is employed.

I have now found that in such cases and especially with big electrodes it is difficult to get a good attachment of the peripheral carbon inserts. These will easily fall off the electrode at its lower part as no satisfactory binding of the carbon inserts to the adjacent electrode mass is obtained. The carbon inserts must therefore be suspended one in the other which is complicated and unsafe.

The principal object of the present invention is to provide a good attachment between the inserts and the electrode mass by giving the carbon inserts such a shape that the electrode mass may penetrate into or surround the single parts of the carbon inserts. When the mass has been baked the carbon inserts will then be completely fixed thereto.

Another object of the invention is to provide a self-baking electrode in which the mantle or shell is formed of sections of pre-baked electrode material, the core of the electrode, as usual being formed of raw electrode mass. In such an electrode the contacts make contact directly against the pre-baked sections forming the shell.

In the drawing forming part of this application an example of my invention is illustrated, but it is to be understood that my invention is not limited thereto.

In such drawing Figure 1 shows a longitudinal section of a continuous electrode constructed in accordance with this invention. Figure 2 shows a horizontal section of the electrode illustrated in Fig. 1.

Referring more particularly to the drawing electrode mass is indicated at 1′ and the pre-baked sections forming the shell or casing of the electrode are indicated at 2′, such sections or inserts having cavities 3′, which may be of different shapes as indicated in the upper and lower sections or inserts respectively shown in Figure 1 and into which cavities the electrode mass penetrates thus fixing the sections. The current-supplying contact clamps are illustrated at 6. In the example of the invention shown the sections or inserts are arranged around the periphery of the electrode, thus forming a casing or shell for the core of the electrode mass.

What I claim as new and desire to secure by United States Letters Patent is:

1. An electrode of the kind that is baked while in use in the electric furnace comprising raw electrode mass and a casing, the casing being formed of pre-baked carbon inserts arranged at the periphery of the electrode in abutting relation.

2. An electrode of the kind that is baked while in use in the electric furnace comprising raw electrode mass and a casing, the casing being formed of pre-baked carbon inserts arranged at the periphery of the electrode in abutting relation and having portions interlocked with the raw electrode mass, whereby when such mass is baked a reliable fixation of the carbon inserts and the mass will be obtained.

Signed at New York, N. Y. this 5th day of April, 1927.

MATHIAS OVROM SEM.

March 18, 1930. M. O. SEM ET AL **1,751,177**

PROCESS IN THE MANUFACTURE OF SELF BAKING ELECTRODES

Filed Dec. 6, 1928

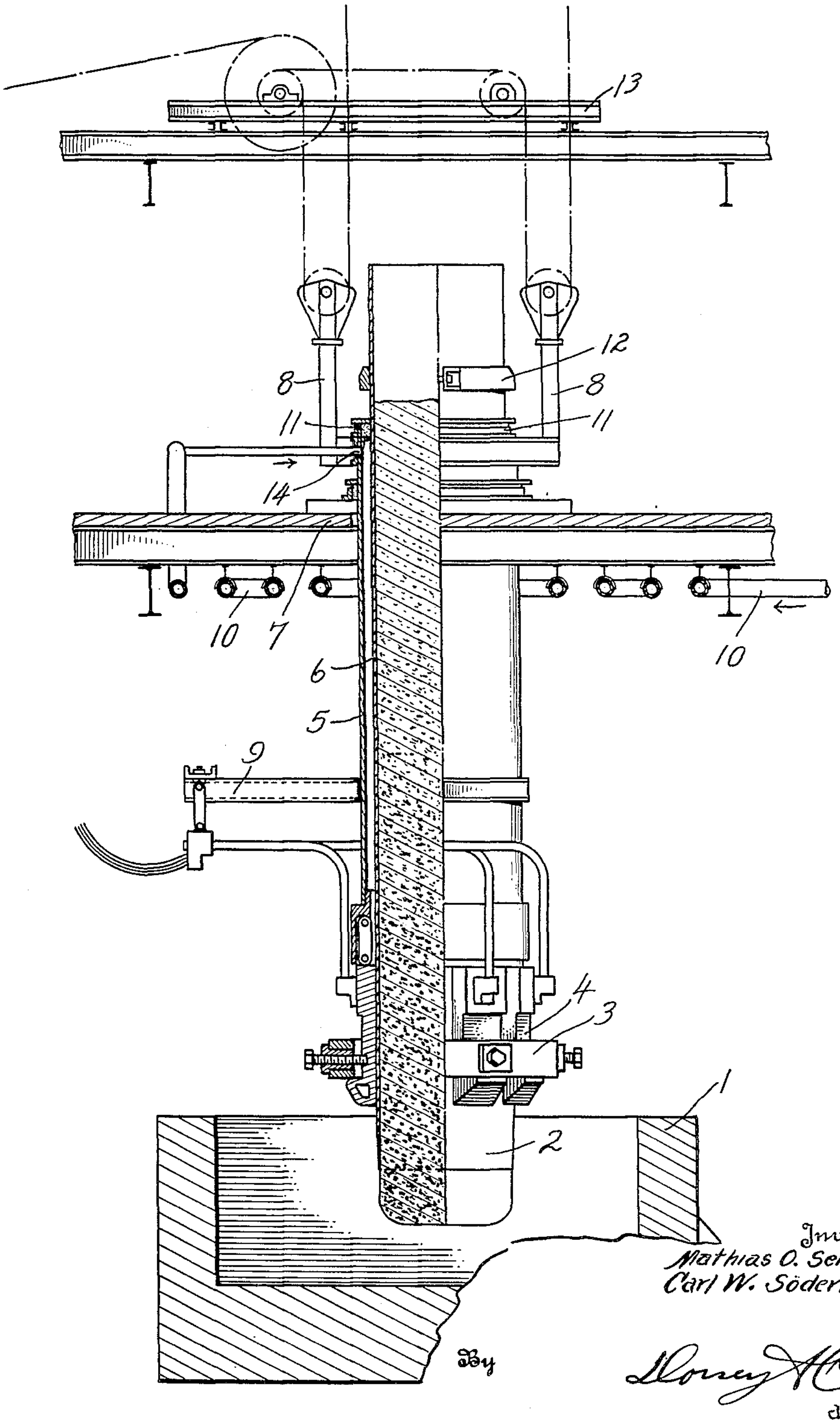

Inventors
Mathias O. Sem, and
Carl W. Söderberg.

By

Attorneys

Patented Mar. 18, 1930 1,751,177

UNITED STATES PATENT OFFICE

MATHIAS OVROM SEM, OF BUFFALO, NEW YORK, AND CARL WILHELM SÖDERBERG, OF OSLO, NORWAY, ASSIGNORS TO DET NORSKE AKTIESELSKAB FOR ELEKTROKEMISK INDUSTRI OF NORWAY, OF OSLO, NORWAY

PROCESS IN THE MANUFACTURE OF SELF-BAKING ELECTRODES

Application filed December 6, 1928, Serial No. 324,171, and in Germany September 26, 1928.

The present invention deals with the manufacture of electrodes that are baked during use in the electric furnace. Such electrodes have been called self-baking electrodes. They are made by filling raw electrode paste into a form or mantle which ordinarily is made from sheet iron. This form shapes the electrode and holds the same together until it is baked. In order to compensate for the wear of the electrode in the furnace, new paste is added to the top of the electrode as the lower end wears off in the furnace.

Owing to the conditions under which these electrodes are made, it has been found to be of advantage to use a paste having such consistency as to be elastic and non-tampable, such for instance as the paste that has been described in U. S. Patent No. 1,670,052, to Soderberg. It is of particular importance that this electrode paste has sufficiently low viscosity to settle in the electrode during the baking without the necessity of applying high pressure or heavy blows. The paste should therefore have a relatively high proportion of binder, such as tar and pitch. These materials have a much lower viscosity at higher temperatures than when cold. It has been the practice heretofore, in order to fill the paste into the electrode, to heat it to a temperature above the melting point of the binder materials and apply it while hot. It is possible, however, to make a paste without heating if a suitable pitch is used as a binder, in which case, the materials can be mixed with the pulverized pitch at ordinary temperatures without any heating. In this case, the paste, when ready mixed, is still a powder. So far, however, this paste also has always been heated before being filled into the electrode. The hot paste has been pressed or rammed mechanically into the electrode, for which purpose either pneumatic or hand rammers have been used. The paste takes more or less ramming, depending upon its viscosity. The heating of the paste has ordinarily been carried out in special heating ovens, where the paste has been filled in in blocks, and heated to a temperature of 100° to 140° C. at which temperature the paste has been filled into the electrode.

The present invention has for its principal object a process whereby this previous heating of the paste is avoided. The inventors have found it is possible to fill properly prepared cold paste directly into the electrode without pre-heating, and then apply heat to the paste after its addition to the electrode, and have provided an arrangement such that the paste is heated to above the melting point of the binder material after being filled into the electrode. The paste will, of course, become heated in any case during its passage towards the baked end of the electrode. But ordinarily the holder is water cooled, and stops the heat flow in the electrode. Furthermore, in order to have the best results, it is important to melt the paste in the upper end of the electrode so as to have the weight of a long column of paste pressing on the baking zone. If the paste is filled in cold it is therefore important to apply heat in the upper end of the electrode.

This heating can be carried out in different ways. For open furnaces, the electrode is made above a platform, which is arranged over the furnace. Underneath the platform, the electrode is exposed to the heat of the electric furnace. In such cases, it is frequently sufficient to let this heat do the melting of the paste in the electrode. In many cases, the self-baking electrodes in open furnaces have been provided with a cooled dust shield, however, as described in U. S. Patent No. 1,691,505 to Walther. The same counteracts the melting of the paste in the electrode. One can improve this condition by leaving out the cooling in the upper part of the dust shield. If it is necessary to use a special means for artificially heating the paste in the electrode, this can be accomplished by using either gas or electricity. Such heating can be done either from the outside of the electrode, or inside the same, for instance, by arranging electric heating elements that go down into the electrode paste. These can be operated in such a way that the paste is filled in at night, whereafter the heating elements are turned on, giving enough heat to melt the paste during the night. In order to save heat, one may heat insulate the top of the electrode.

The paste can be allowed to settle all by itself, or else a mechanical treatment of the electrode by pneumatic rammers or similar equipment, can be applied.

An illustration of one method of heating the top of the electrode, where an air-cooled dust shield is used, is to let the air pass through iron pipes, arranged below the platform, before it is forced into the dust shield. Thereby, the air can be pre-heated to any desired extent, and we have shown such an arrangement in the accompanying drawing.

The drawing represents an elevational view, partly in section, of a furnace installation in which the invention may be carried out.

In the illustration, which shows an adaptation to the present invention, of one form of installation shown in the aforesaid Walther patent, 1 is an electric furnace, 2 is a self-baking electrode, and 3 is a ring having means for tightening the electrode gripping members 4. The gripping members are suspended in the lower end of the casing 5 which is placed outside of the actual electrode mantle 6, and is led through the floor of the tamping house 7, and at its upper end is fastened to the suspension element 8 which may be raised and lowered in known manner. A stuffing box 11 is at the upper end of the casing, against which a stopping ring 12 may engage when the electrode has moved through its maximum "drop". A displaceable frame is indicated at 13, through the operation of which the electrode may be bodily moved about. To the casing 5 is fastened a carrier arrangement 9 for the electric leads conducting current to the electrode. In order to heat the upper portion of the electrode, to raise the temperature of the paste which is fed in at such upper end, air may be blown in through the pipe 10 suspended from the floor of the tamping house, and therefore subjected to the heat of the furnace, such air as it passes through the convolutions of the pipe becoming heated, and this heated air may be introduced at 14 near the upper end of the casing to thereby occupy the space between the casing and mantle and heat the latter as it penetrates downward to pass out at the lower end of the casing. The air is preferably heated to about 100° to 200° C., the temperature chosen depending upon the particular paste being used, and the temperature to which it is found most desirable to heat the paste for the purposes hereinbefore set forth. The desired temperature may be attained by controlling the speed of the in-blown air, or by determining the length of pipe exposed to the heat of the furnace through which the air passes, or in other desirable manner.

It will easily be understood that the above procedure will operate to best advantage if an electrode paste is used, which will become sufficiently fluid when exposed to heat in the electrode. Such paste has been described in the before mentioned Patent No. 1,670,052. It should be sufficiently soft at the temperatures in the electrode to be elastic and non-tampable. If the same is used, any mechanical treatment of the paste in the electrode can be avoided.

Having thus described our invention what we claim as new and desire to secure by Letters Patent is:—

1. The process of forming an electrode baked while in use in the electric furnace and including electrode paste and an enclosing mantle comprising filling in paste at temperatures below the melting point of the binder material, applying heat to the filled in paste and causing the paste to flow and form a solid electrode.

2. The process of forming an electrode baked while in use in the electric furnace and including electrode paste and an enclosing mantle comprising filling in paste at temperatures below the melting point of the binder material, applying heat to the filled in paste thereby softening the paste and applying mechanical ramming or pressing so as to make the paste form a solid electrode.

3. The process of forming an electrode baked while in use in the electric furnace and including electrode paste and an enclosing mantle comprising heating the upper end of the electrode by air or gas of a temperature of about 100°–200° C.

4. The process of forming an electrode baked while in use in the electric furnace and including electrode paste and an enclosing mantle, comprising adding paste to the upper portion of the electrode at temperatures below the melting point of the binder content of the paste, and heating the added paste to a temperature sufficiently high to melt the binder and cause the paste to flow and form a solid electrode.

5. The process of forming an electrode baked while in use in the electric furnace and including electrode paste and an enclosing mantle or form comprising filling paste into the electrode at temperatures below the melting point of the binder materials and applying heat to the filled in paste after its addition to the electrode, said paste having a binder content sufficiently high to render the paste elastic and non-tampable at the temperature in the electrode thereby causing the paste to flow and form a solid electrode.

6. The process of forming an electrode baked while in use in the electric furnace and including electrode paste and an enclosing mantle comprising adding paste to the upper unbaked end of the electrode at temperatures below the melting point of the binder, and subjecting the added paste to heat, other than the heat generated in the electrode, to cause the paste to flow and form a solid electrode.

7. The combination of an electrode baked

while in use in the electric furnace including electrode paste and an enclosing mantle, a holder adjacent the lower baked portion of the electrode for introducing current thereto, a heater adjacent the zone of the electrode above the holder, and means to heat the heater to thereby cause the paste in such zone to flow and form a solid electrode.

In testimony whereof we hereunto affix our signatures.

MATHIAS OVROM SEM.
CARL WILHELM SÖDERBERG.

Patented Aug. 25, 1931 **1,820,625**

UNITED STATES PATENT OFFICE

PAUL LOUIS JOSEPH MIGUET, OF ST.-JULIEN DE MAURIENNE, FRANCE, ASSIGNOR TO SOCIÉTÉ ELECTROMETALLURGIQUE DE MONTRICHER, OF ST.-JULIEN DE MAURIENNE, SAVOIE, FRANCE

ELECTRODE FOR ELECTRIC FURNACES

No Drawing. Application filed June 23, 1928, Serial No. 287,896, and in France March 31, 1928.

This invention relates to improvements in electrodes for electric furnaces.

Heretofore electrodes have been made in cylindrical sections adapted to have the end of one section secured to the end of another section to form what is known as a continuous furnace electrode. These electrodes so formed are maintained in continuous operation by successively adding sections to the top of the electrode as the bottom section is used up. Such sections have been made of a preformed conductive shell filled with a core of electrode material having a binder of tar, pitch or resin mixed therewith. At least the first section of these electrodes are baked or coked prior to placing the electrode into operation and the subsequent sections are usually added to the electrode with the filling material in the raw state and these materials are then baked in place from the heat of the furnace while it is in operation.

It is known that such binding materials give off a quantity of volatile matter while they are being converted into a solid state by the application of heat, and that an increase in the quantity and in the rate of evolution of the gases from the filling material causes an increase in the porosity and a decrease in the durableness of the electrode.

Therefore one of the objects of my invention is to perfect a method of baking an electrode without generating an excessive quantity or rate of evolution of gas.

Another object of my invention is to produce a compact, durable electrode.

The invention disclosed herein is an improvement of the electrode described in my concurrent application Serial No. 242,224 filed December 23, 1927.

According to my invention the electrode comprises a hollow conductive shell into which a carbonaceous filler is packed. The filling material comprises finely divided coal or a mixture of finely divided coal and an inert material which contains little or no volatile matter, such as coke, furnace dust or primary materials to be treated such as those described in U. S. Patent No. 1,707,406. The filling material should have in itself coking properties necessary to produce a solid compact mass at temperatures below 1000° C. without the evolution of great quantities of volatile matter. Therefore I desire to select a coal of a bituminous nature for at least one ingredient of my filling material and I desire to exclude such binding materials as pitch, resin or tar.

The coking factor of the filling material may be controlled by varying the ratio of the quantity of the coal to the quantity of inert materials, that is materials which evolve substantially no gas when subjected to heating.

As a further precaution to eliminate the evolution of gases during the baking of the electrode, it is desirable that the chosen filling material be completely desiccated before it is placed in the electrode shell. This may be effected by commencing and then stopping distillation at the proper point.

Also the proportion of ash in the filling material should be, as far as possible, below 6% in normal electro thermal cases and below 1% in the case of electrolysis such as that of aluminum.

The grade of coke obtained in the coked portion of the electrode is controlled not only by the proper selection of the primary filling materials for the electrode but it is also controlled by the proper regulation of the temperature to which the materials are subjected at the various stages of their conversion into the final coked product.

The proper regulation of the temperature is automatically controlled due to the fact that the heat required to convert the filling material into coke is derived almost exclusively from the heat liberated at the lower end of the electrode and this heat is gradually conducted upwards through the filling material and the electrode shell. Substantially no direct electro thermal heat is produced in the raw filling material by the passage of current therethrough because the current in the electrode at this point is confined almost exclusively to the more conductive electrode shell. Due to this action the raw filling materials are gradually heated and the rapid evolution of gases is effectually prevented.

As a result of the above action the filling material is converted into a "semi-coke" in the mid upper half of the electrode where the temperature is maintained at between 500° C. and 600° C., and the coking of the filling material is gradually completed as the lower end of the electrode is consumed and the electrode is fed into the furnace.

My invention is capable of being modified and adapted for several uses. For example, an electrode may be formed by substituting the electrode filling material described herein for that used to fill the hollow cylindrical carbon shell described in U. S. Patent No. 1,707,406. In such a case where the filling material is composed wholly of carbonaceous materials it will serve principally to protect the inner portion of the shell from the furnace heat and to prevent the escape of gases through the electrode shell, and where the carbonaceous filling materials are mixed with materials to be treated when the filling materials act also as a conveyor of these materials to the furnace.

Due to the solidity of the packed raw filling materials used in my electrode it may be provided with a shell of sheet metal and it will not be subject to be deformed by the pressure of the electrode holder as would be the case if the filling materials contained such deformable binding materials as pitch, resin or tar. Due to the solidity of the electrode it is not liable to slip in the electrode holder. The electrode is therefore very dependable and it is very suitable for use in both open and closed type furnaces.

As the filling material used in my electrode cokes at a relatively low temperature the electrode may be used in low temperature furnaces as well as in furnaces which operate with temperatures above 1000° C.

Among other uses of my electrode it may be used to superheat steam where the steam is superheated to the neighborhood of 600° C.

In initially placing the electrode into operation it is advisable, but not indispensable, to previously bake the bottom end section at a high temperature. The subsequent sections may be baked after they are assembled in the electrode and during the operation of the electrode. It may be found advantageous to compact the filling materials into the shell before they are assembled on the electrode in operation instead of packing the materials into the shell after it has been secured to the lower sections then in operation.

I claim:

1. An electrode for electric furnaces said electrode having a conductive shell of preformed material, a filler of unbounded carbonaceous material in the upper end of said shell and a filler of bonded carbonaceous material in the bottom end of said shell.

2. An electrode for electric furnaces said electrode having a conductive shell of preformed material, a filler of unbounded coal in the upper end of said shell and a filler of coke in the bottom end of said shell.

3. An electrode for electric furnaces said electrode having a conductive shell of preformed material, a filler of unbonded coal and an inert material in the upper end of said shell and a filler of coke in the bottom end of said shell.

4. The method of forming an electric furnace electrode comprising packing unbonded carbonaceous materials into a hollow conductive case; passing current through the electrode and converting the materials at a low temperature into a compact mass with the heat derived from the operation of the furnace.

5. The method of forming an electric furnace electrode comprising packing unbonded coal into a hollow conductive case; passing current through the electrode; and coking the materials at a low temperature with the heat derived from the operation of the furnace.

In witness whereof I affix my signature.

PAUL LOUIS JOSEPH MIGUET.

Nov. 30, 1937. R. TREMATORE **2,100,927**

CONTINUOUS ANODE FOR ELECTROLYTIC CELLS FOR THE PRODUCTION OF ALUMINIUM

Filed July 17, 1934

Fig.1

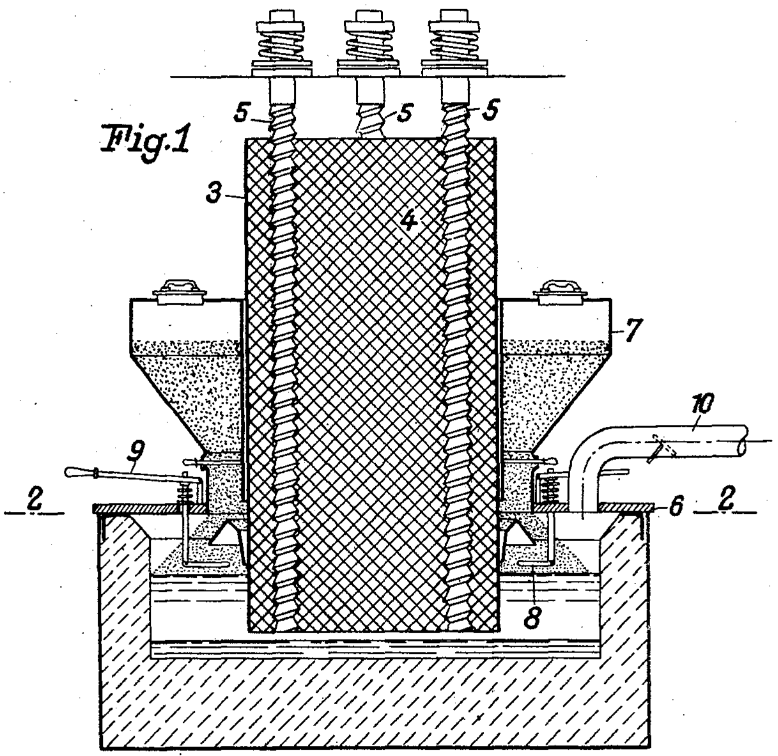

Fig.2

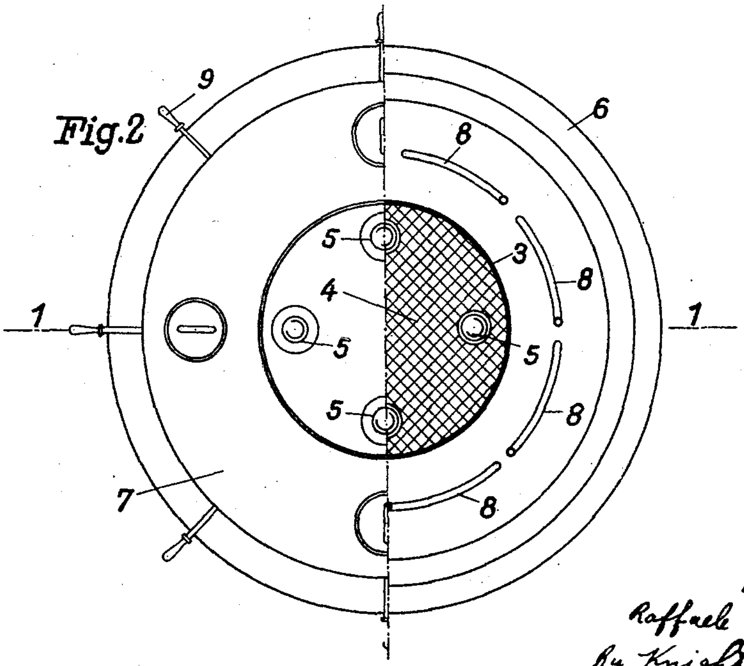

Inventor:
Raffaele Trematore
By Knight Bros
His attorneys

UNITED STATES PATENT OFFICE

2,100,927

CONTINUOUS ANODE FOR ELECTROLYTIC CELLS FOR THE PRODUCTION OF ALUMINIUM

Raffaele Trematore, Mori, Trento, Italy, assignor to Det Norske Aktieselskab for Elektrokemisk Industri, Oslo, Norway

Application July 17, 1934, Serial No. 735,639
In Italy July 22, 1933

4 Claims. (Cl. 204—20)

The continuous anodes used so far in electrolytic cells for the production of aluminium are provided with current-carrying connections infixed laterally, through the metallic casing, into the self-baking mass. These connections have to be extracted and placed in higher positions from time to time when it becomes necessary to avoid contact between them and the fused bath in the cell, when the anode has to be lowered as it is consumed.

The present invention consists fundamentally in substituting for these connections threaded bars or tubes (hereinafter called bars) arranged inside the electrode, in such a way as to pass lengthwise through the self-baking mass without touching the external casing. The paste, as it bakes, assumes the shape of a female screw at the surface of contact with the current carriers, which can therefore be unscrewed progressively from the anode upwards as the need arises. The same tubes or bars may then also serve to suspend the anode itself. In order to allow the current carriers to be rotated easily without compromising their electrical contact, it is advisable to adopt a thread of special type, generated by the helicoidal movement of a scalene triangle, the longest side of which is parallel to the axis of the screw and the shortest side of which generates the helicoidal surface inclined downwards towards the axis of the screw (while the third side generates the helicoidal surface inclined upwards).

Figure 1 shows, in longitudinal section (1—1 of Fig. 2), an illustrative example of the device claimed; Figure 2 shows, on the left, the same device as seen from above and, on the right, the same device in transverse section (2—2 of Fig. 1). 3 shows the casing of the electrode. 4 represents the self-baking paste. 5 the current-carrying bars which, in the example given, are four in number.

The cell is provided with a cover 6 made of heat-insulating materials, composed of removable sectors, on which a hopper 7 is arranged. This hopper surrounds the smooth surface of the electrode and serves to feed the alumina. In this way, the latter is preheated at the expense of the heat which is developed during the baking of the electrodic paste. The material is discharged from the cell in such a way as to avoid corrosion of the electrode.

Devices for stirring the bath are arranged on the cover 6 and comprise horizontal arms 8 to which a vertical movement may be given by means of levers 9; the device shown in Figure 1 may be replaced by another device such as would allow also a horizontal movement around a vertical axis in order to depolarize the cell in case vertical stirring is not sufficient for the purpose. The operations of charging the alumina and ramming it may both be carried out separately in the various sectors of the cell.

Tube 10 for the elimination of the gases and dust produced may also be arranged on the cover of the cell.

In the drawing, the cell is round and has one anode only. The devices described may, however, also be applied to other forms of cells and if desired, furnished with more than one anode.

The fundamental advantage of the invention is derived from the fact that the external casing of the anode is perfectly smooth and without holes or protuberances, in contrast to the types of cell used so far. This characteristic allows a more rational form to be given to the cell, facilitates the elimination of the gases freed (the cell may easily be covered) and offers the possibility of recovering the heat through the hopper 7. Moreover, the use of this device notably simplifies the suspension of the anode and diminishes the fall in tension inside the latter by reason of the minimum distance which can be maintained between the current carrier and the lower extremity of the electrodic paste. The operation of regulating the current carriers may be rendered continuous if a small motor is applied to effect their movement. The current carrying bars 5 are preferably set so that their lower ends are some distance back from the bottom of the electrode body 4 to protect them against melting and contaminating the bath.

Having now particularly described and ascertained the nature of my said invention and in what manner the same is to be performed, I declare that what I claim is:—

1. An anode for an electrolytic cell for the production of aluminum made from carbon paste that is baked during the operation in the cell, provided with current carrying threaded bars extending lengthwise through the electrode and being in contact with the baked as well as the unbaked part of said electrode, said bars being unscrewable upwards as and when it becomes necessary in order to avoid contact between them and the bath as the anode is consumed.

2. An anode for an electrolytic cell for the production of aluminum, made from carbon paste, that is baked during the operation in the cell, provided with at least four current carrying threaded bars extending lengthwise through the electrode and being in contact with the baked

as well as the unbaked part of said electrode, said bars being unscrewable upwards as and when it becomes necessary in order to avoid contact between them and the bath, as the anode is consumed.

3. An anode for an electrolytic cell for the production of aluminum, made from carbon paste that is baked during the operation in the cell, provided with current carrying threaded bars extending lengthwise through the electrode and being in contact with the baked as well as the unbaked part of said electrode, said bars being unscrewable upwards as and when it becomes necessary in order to avoid contact between them and the bath, as the anode is consumed, the thread of said bars being generated by the helicoidal movement of a scalene triangle, the largest side of which is parallel to the axis of the screw and the shortest side of which generates the helicoidal surface inclined downwards towards the axis of the screw.

4. In combination with an electrolytic cell for the production of aluminum, an anode composed of carbon paste that is baked during the operation of the cell, whereby the lower part of said anode is normally baked and the upper part unbaked, and current carrying threaded bars extending longitudinally through the unbaked part of said electrode into the baked part thereof and terminating above the level of the electrolyte in the cell, said bars being mounted so that they can be turned to withdraw the same upward in said anode as the lower end of the latter is consumed.

RAFFAELE TREMATORE.

May 23, 1939.

M. O. SEM

2,159,183

SELF-BAKING ELECTRODE

Filed July 1, 1937

Fig. 1

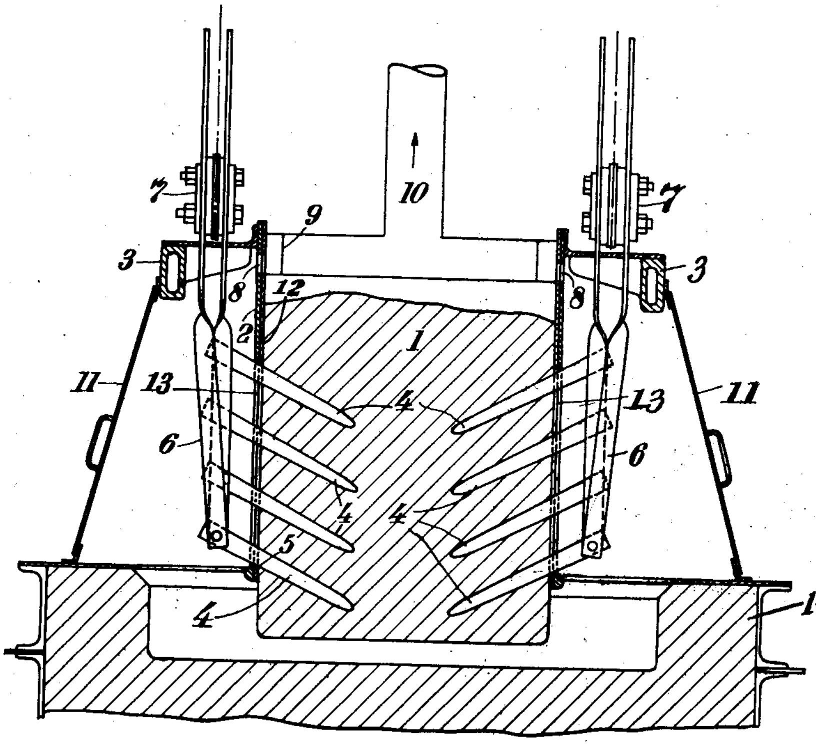

Fig. 2

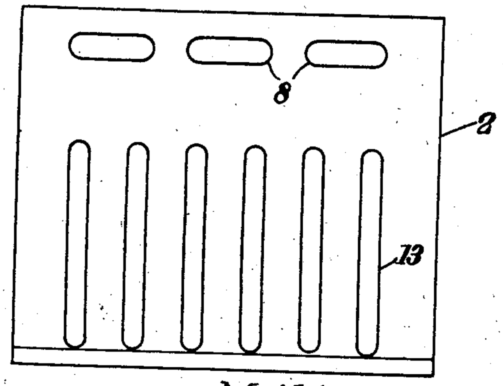

Inventor:

Mathias Ovrom Sem

By

Attorneys

Patented May 23, 1939 2,159,183

UNITED STATES PATENT OFFICE

2,159,183

SELF-BAKING ELECTRODE

Mathias Ovrom Sem, Oslo, Norway, assignor to Det norske Aktieselskab for Electrokemisk Industri, Oslo, Norway

Application July 1, 1937, Serial No. 151,369
In Norway July 8, 1936

7 Claims. (Cl. 13—19)

This invention relates to selfbaking electrodes, commonly called Söderberg electrodes.

The primary object of the invention is the construction of a selfbaking electrode in which the adhesion of the electrode to the casing employed in its formation does not prevent the controlled movement of the electrode through the electrode casing as the electrode is burned off at the bottom in use; but on the contrary, permits the electrode to be lowered through its casing while in use and thereby makes possible the avoidance of the melting of the casing at the bottom on the burning away of the electrode with the destruction of the casing attendant thereto and in certain instances contamination of the melt.

Other objects of the invention will be apparent as this description proceeds.

The procedure usually employed in the operation of selfbaking electrodes as at present constructed consists in permitting the metallic casing serving as a mold and armature for the electrode to melt down into the electric furnace in which the electrode is used, which casing is thus consumed together with the electrode. Experiments have been made in the use of a permanent casing through which the electrode may slide into the furnace without destruction of the casing and without the casing passing into the melt. In the practical application of such permanent casings such difficulties have been encountered that prior to the invention hereof permanent casings have not proved successful in commercial production.

By continued work on this problem applicant has eventually arrived at a structure which in many cases may be applied in commercial production with considerable advantage. Broadly speaking, in applicant's electrode the casing acts as a permanent mold for the formation of the electrode and the supply of current to the electrode mass is independent of the casing, so that in the baking of the electrode no current will pass from the electrode casing directly to the unbaked electrode mass within the casing.

Where the current passes from the casing to the electrode mass a sudden coking of the binding agents of the electrode mass in contact with the casing occurs, which causes such adherence between the electrode casing and the electrode that the baked electrode cannot in use pass through the casing.

If, however, care is taken to supply the electric current to the electrode independently of the casing, the baking of the electrode will altogether take place from the inside and during the baking the electrode mass will contract.

Provided a casing is employed which is rigid and not pressed against the electrode from outside, the connection between electrode casing and mass will gradually loosen as the baking proceeds. This is not only effected by the said contraction of the electrode mass but also because the casing which is warmer in its lower than in its upper part expands during the heating. When used in a hot electric furnace the casing will therefore during operation be slightly conical with the wide end downwards even if it is cylindrical in cold condition. This effect may if desired be further improved upon by making the casing wider at its lower than at its upper end. Usually this is however not necessary.

The practical application of the invention may be modified according to the conditions in the electric furnace in which the electrode is employed and the electrode construction must be adjusted to suit these conditions. The invention is especially suitable in connection with electrodes which are used in aluminium furnaces in which special iron contacts are employed penetrating into the electrode from its outside. The invention may also be used in connection with contacts arranged vertically in the electrode mass inside the electrode casing. Special contacts may also be arranged in the electrode mass registering with the inside of the casing and receiving the current from the casing without development of so much heat that the binding agents of the mass are subjected to an intense coking.

In the drawing forming a part hereof, I have shown the invention as applied to a closed furnace particularly applicable as an aluminum furnace. It should be understood, however, that this is purely for illustrative purposes and no undue limitation should be deduced therefrom. In the drawing,

Figure 1 is a vertical cross-section of the electrode and furnace, the lower part of the furnace being broken away and certain parts of the structure being shown in full lines;

Fig. 2 is an elevation of the portion of the electrode casing straightened into a plane for ready illustration.

Reference being had more particularly to Fig. 1, the electrode 1 is illustrated as being formed in an iron casing or mold 2 which is supported on a fixed frame 3 suitably positioned in respect to the electrode 1 and furnace 14. The casing 2 is provided with a series of vertical slots 13 through which extend contact studs 4. These contact studs are illustrated as arranged in vertical tiers, one tier for each slot 13 in the casing, and the bottom contact stud in each tier is supported as its outer end by cable bars 6 which latter are in turn attached to a suspension frame 7, the bars 6 serving the double purpose of supporting the contact studs and of supplying current thereto.

The contact studs 4 are positioned midway in the slots 13, and the slots 13 have a width in excess of the diameter of the studs. Electrical contact between the studs and casing is thereby avoided, except at the time when the lower row of studs has reached the limit of their travel and rests on the casing at the bottom of the slots. This position is illustrated in Fig. 1. Here, however, the baking of the electrode has progressed to such a stage that coking which would interfere with the movement of the electrode through the casing does not occur; and the electrical connection of the contact studs with the electrode is much better than with the casing.

The suspension frame 7 may be raised or lowered in known way, by means of spindles or jacks or other well known devices common in the art but not illustrated in the drawing. Except in the position illustrated in Fig. 1, the electrode 1 in its travel through the casing 2 is supported in large part by its adhesion to the casing, the frictional contact between electrode and casing being such that about 50% of the load is supported in this way, the remainder obviously being carried by the contact studs 4 which are connected with the bars 6.

During operation the electrode is slowly lowered relatively to the bath surface as its lower end is consumed. This is effected by lowering the suspension frame 7. When in this way the frame at last approaches its lowest position the contact studs must be so arranged that the lower row of studs will rest on the electrode casing at the bottom of the slots 13 as indicated by the reference numeral 5, and travel of the electrode through its casing is thereupon arrested. The contact bars 6 may then be disconnected from the lower row of studs 4, the suspension frame and contact bars 6 raised, the bars 6 connected with the row of studs next higher up, the lower row of studs 4 thereafter transferred to a position at the top of the slots 13, and the travel of the electrode through its casing reestablished. The nuts connecting the frame 7 with the vertical cable bars may suitably be supplied with springs (not shown) thus forming a sliding contact allowing the supply of current to be maintained even while the frame is lifted to its highest position.

The drawing indicates a closed furnace in which a collecting tube for the oven gas is placed inside the electrode mold. The gas passes through holes 8 into a gas passage 9 at the inside of the electrode mold. This passage is connected with an exhaust pipe 10. The hood surrounding the electrode is provided with a suitable number of doors 11.

The drawing shows a type of electrode casing provided with a lining of aluminium 12 apertured in like manner as the casing 2. This lining possesses the advantage that the electrode mass will more easily slide against an aluminium plate than against an iron plate.

During the starting of the oven while the electrode is crude and unbaked it is difficult to make the electrode slide in the mold. One may therefore during the first period let the aluminium lining slide together with the mass. As soon as the electrode is baked and conditions are normal the aluminium lining will as a rule stop by itself. The electrode mass will slide inside the aluminium lining and this may therefore be attached to the casing 2.

To prevent the unbaked electrode mass from more or less breaking out through the vertical slots 13 for the contacts 4 the slots may suitably be covered with an aluminium plate (not shown) which moves downwards together with the contacts, as it is important that the electrode mass does not get any chance to penetrate through the slots so far that it will adhere to the bottom of the slots 13 during the lowering of the electrode. It is, however, of course possible to vary the mode of application in many ways.

The foregoing detailed description and illustrations have been given for clearness of understanding and no undue limitations should be deduced therefrom, but the appended claims should be construed as broadly as possible in view of the prior art.

I claim:

1. Arrangement for selfbaking electrodes where the electrode mass slides in a permanent metallic mold said mold having slots for contacts being inserted from outside into the electrode, said slots being of sufficient length to allow lowering of electrode and contacts during operation.

2. Arrangement for selfbaking electrodes where the electrode mass slides in a permanent metallic mold said mold having slots for contacts being inserted from outside into the electrode, said slots being closed at the lower end in such a way that the downward movement of the electrode is stopped until the lower set of contacts has been removed.

3. Arrangement for selfbaking electrode where the electrode mass slides in a permanent metallic mold, said mold having slots for contacts being inserted from outside into the electrode, said contacts serving for suspension of the electrode.

4. The combination of a selfbaking electrode, a fixedly mounted electrode casing therefor which comprises a mold for the electrode and in respect to which the electrode is relatively movable in a downward direction, said casing being provided with slots positioned lengthwise in the direction of movement of the electrode through the casing, electrical contact studs extending through said slots into the interior of the electrode, the construction of the said slots and contact studs being such that as the electrode is lowered through its casing there is no electrical connection between the studs and the casing and current led to the said contact studs passes to the interior of the electrode for baking the same and such that the contact studs are movable downwardly through the slots.

5. The combination of a selfbaking electrode, a fixedly mounted electrode casing therefor which comprises a mold for the electrode and in respect to which the electrode is relatively movable in a downward direction, said casing being provided with slots positioned lengthwise in the direction of movement of the electrode through the casing, rows of removable electrical contact studs extending through said slots into the interior of the electrode, the construction of the said slots and contact studs being such that as the electrode is lowered through its casing there is no electrical connection between the studs and the casing and current led to the said contact studs passes to the interior of the electrode for baking the same and such that the contact studs

are movable downwardly through the slots, the lower walls of the slots comprising supports for the bottom row of contact studs on reaching the said walls in their downward travel and through the said contact studs supporting the electrode while additional contact studs are mounted in the electrode above.

6. The combination of a selfbaking electrode, an electrode casing therefor which comprises a mold for the electrode, said casing being provided with an inner lining, the casing being relatively movable in respect to the electrode and the lining being held to the electrode by adhesion of the electrode mass during the initial stage of the baking of the electrode and during said baking being relatively movable in respect to the casing, the casing and its lining being relatively fixed after the initial stage of the baking of the electrode and said electrode being relatively movable in respect to the lining thereafter, the casing and its lining being provided with registering slots positioned lengthwise in the direction of movement of the electrode through the casing, electrical contact studs extending through said slots into the interior of the electrode, the construction of the said slots and contact studs being such that as the electrode is lowered through its casing there is no electrical connection between the studs and the casing and current led to the said contact studs passes to the interior of the electrode for baking the same and such that the contact studs move downwardly through the slots.

7. The combination with a hooded electric furnace of a selfbaking electrode, an electrode casing therefore fixedly mounted in respect to the furnace and comprising a mold for the electrode, the electrode and casing being relatively movable so as to permit the electrode to be moved toward the charge to compensate for the burning away of the electrode at the charge, said casing being provided with vertical slots, electrical contact studs extending into the interior of the electrode through and movable lengthwise of said slots, the construction of the said slots and contact studs being such that as the electrode is lowered through its casing there is no electrical connection between the contact studs and the casing and current led to the said contact studs passes to the interior of the electrode for baking the same, said casing being provided near its top with gas vent apertures positioned within the hood of the furnace, and means cooperating with the said gas vent apertures for conducting gas passing therethrough away from the furnace.

MATHIAS OVROM SEM.

Dec. 21, 1943. M. O. SEM ET AL 2,337,279

ARRANGEMENT IN SELF BAKING ELECTRODES

Filed Sept. 5, 1941 2 Sheets-Sheet 1

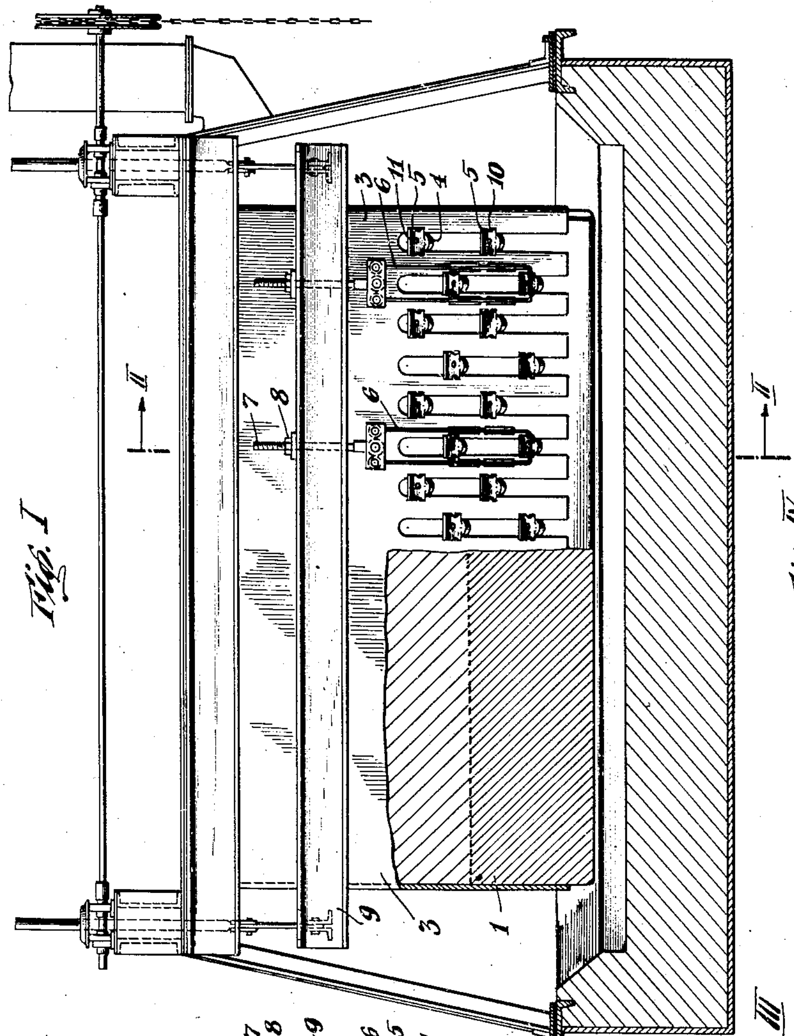

Fig. I

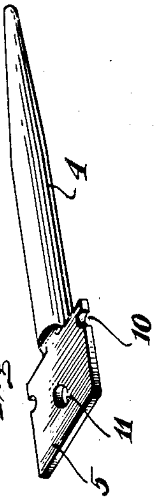

Fig. IV

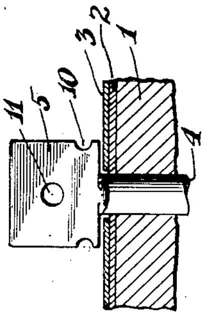

Fig. III

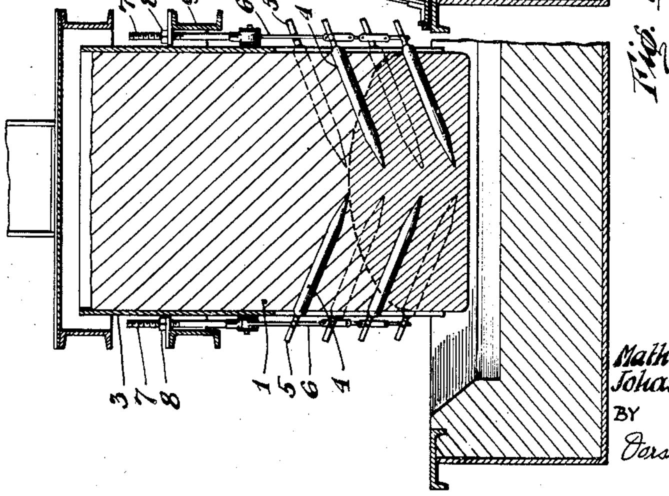

Fig. II

INVENTORS
Mathias Ovrom Sem
Johannes Sejersted
BY
Darsey, Cole & Mann
ATTORNEYS

Dec. 21, 1943. M. O. SEM ET AL 2,337,279

ARRANGEMENT IN SELF BAKING ELECTRODES

Filed Sept. 5, 1941 2 Sheets-Sheet 2

Fig. VI

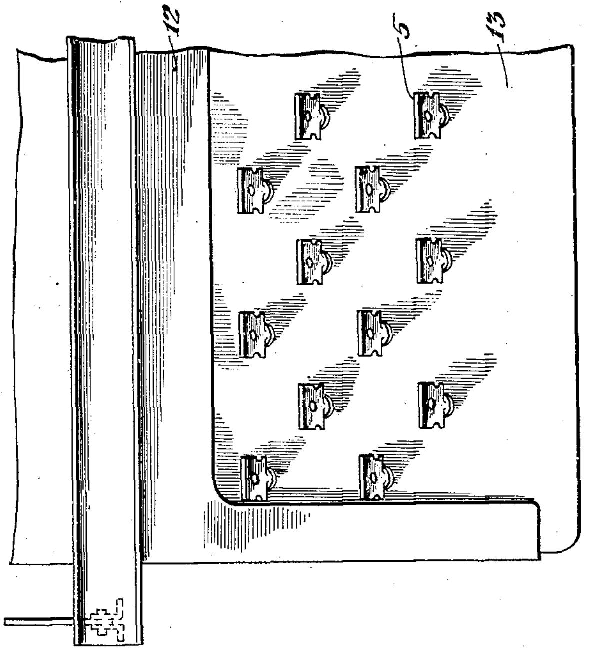

Fig. V

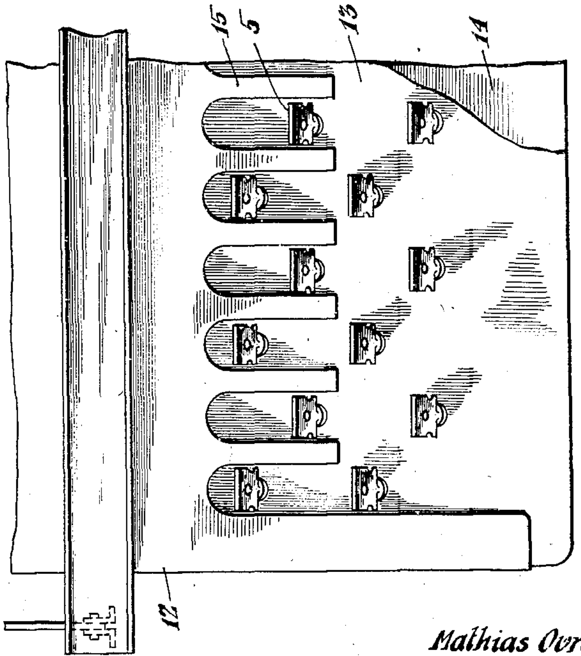

INVENTORS
Mathias Ovrom Sem
Johannes Sejersted
BY

ATTORNEY

UNITED STATES PATENT OFFICE

2,337,279

ARRANGEMENT IN SELF-BAKING ELECTRODES

Mathias Ovrom Sem, Smestad, and Johannes Sejersted, Roa, Norway; vested in the Alien Property Custodian

Application September 5, 1941, Serial No. 409,742
In Norway July 2, 1940

3 Claims. (Cl. 13—14)

This invention relates to an improvement in the production of oblong Soederberg electrodes.

It has previously been pointed out that the upper part of the Soederberg electrodes consists of paste which is sufficiently soft so that it will flow and develop hydrostatic pressure tending to deform the electrode and tending to cause the casing for the electrode to assume a cylindrical shape. For this reason, it has previously been suggested that the electrode be held in place by metal bars or frames as shown, for example, in Legeron Patent No. 2,169,563, or Torchet Patent No. 2,073,356.

In the present invention, we utilize a permanent casing for the electrode such as is shown in Sem Patent No. 2,159,183. If such a casing is made of sheet metal or thin plates, it will serve to guide the electrode but does not have sufficient rigidity to maintain the electrode in the desired rectangular shape.

It has also been suggested in the patents referred to, to employ metal studs which are driven into the electrode primarily for the purpose of transmitting the electric current into the electrode mass. These contact studs ordinarily are driven in at an angle relative to the horizontal so that the inner end is the lower end. These studs have previously also been used as a means for supporting the electrode mass.

It is to be noted that in these previous uses of the contact studs they served no function until they had been firmly baked into the electrode. In previous experience where outside reinforcement bars or frames were used, the contact studs were inserted into the soft paste. Then for several weeks they did nothing until they had moved down to become the next to the bottom row. Then, a short time before the bottom row of studs was to be pulled out, it has been customary for some of the current to be passed through the next to the bottom row of studs. Finally after the surrounding mass was fully hardened, these studs were used to carry the weight of the electrode and the row below was removed.

In the present case these studs are given a new function. As before, they are inserted into the soft paste, with the inner ends below the outer ends, and the fixed casing in which the mass is assembled is cut away (at least in part) so that the studs can be driven in at a zone where the mass is still fluid.

Ordinarily the electrode will be provided with the usual movable casing or sheath and as the studs are driven into the soft electrode mass quite close to lower edge portions of the fixed casing, this inner casing or sheath will be stiffened sufficiently by the adjacent fixed casing so that in this zone there is but little danger of deformation. As the electrode moves downwardly, the effect of this stiffening from the fixed casing is reduced and there is a zone ordinarily from 20 cm. to 40 cm. wide within which the bracing for the fixed casing is no longer sufficient to support the movable casing and the hydrostatic head of the electrode mass will cause deformation to take place unless some means is employed to prevent it. The central or inner part of the electrode mass starts to harden even while the outer part is sufficiently fluid to exert pressure tending to cause distortion, and we have discovered that if the zone into which the studs are driven is quite close to the zone in which the central part of the mass has begun to harden, then within the danger zone just referred to, the inner and lower ends of the studs will be anchored sufficiently firmly in the harder and partly baked central portions of the electrode mass so that they can be employed to overcome the pressure of the softer portion of the mass which is still fluid. This result is accomplished by employing heads or projections on the studs which, either directly, or indirectly through extensions of the fixed casing, cooperate with the movable casing to hold the electrode mass in desired shape.

As stated the electrode should be provided with a sheath or movable casing which ordinarily will be made of the same metal as is to be treated. Since this type of electrode is ordinarily used in the manufacture of aluminum, this means that the movable casing or sheath should be made of aluminum. As has previously been suggested, instead of making the sheath of aluminum, thin iron sheets may be used which are torn off or unrolled, or iron plates may be employed which are removed at the same time that the contact studs are removed. It is to be understood that where the shoulders of the contact studs bear directly against the movable casing, the fixed casing does not need to extend down far enough to have slots formed in it, though obviously even in this case projections forming such slots may be employed.

While the method of this application may be employed as the sole method of holding the electrode against distortion, it is preferable to have further reinforcement of the upper part of the electrode. Such reinforcement may be in the form of steel bars as has previously been suggested.

Our invention may readily be understood from the illustrative example shown in the accompanying drawings, in which Fig. I is a side view of a furnace pot and electrode involving our invention, with the furnace pot and part of the electrode shown in section; Fig. II is a sectional view on line II—II of Fig. I. Fig. III is a sectional plan view showing the upper end of one of the contact studs in place in an electrode provided with a movable casing. Fig. IV is a perspective view of the outer portion of such a contact stud. Fig. V is a side view of a portion of an electrode in which the contact studs bear directly against the inner casing and the permanent casing is still provided with slots. Fig. VI is a construction similar to Fig. V where the fixed casing is entirely cut away to permit the insertion of the contact studs.

In these drawings, the electrode **1** may preferably be surrounded by a movable aluminum casing **2** attached to and forming part of the electrode. The electrode as shown in Fig. III is enveloped at its upper end by a permanent casing **3** which runs down close to the bath surface and is slotted to provide a place for the contact studs **4** which are inserted into the electrode as has been described in earlier patents. The upper ends of the bolts **4** are broadened out as shown at **5** to form projections or shoulders which bear against the casing **3**. The suspension of the electrode is effected by means of the contact studs **4** which are connected with the tie-rod **7** by means of a chain **6** which engages notches **10** in the heads of the contact studs. The rods **7** are adjustably mounted in the suspension bar **9** which is vertically movable by mechanism described in previous patents. For the purpose of simplicity, the electrical connections are not shown in these drawings, but are intended to be made by the use of the holes **11** formed in the heads of the contact studs. In the same way, the suspension of the electrode is only illustrated by two sets of chains **6** which are shown in Fig. I and in Fig. II. Ordinarily the suspension will be supplied through a large number of such chain sets.

With an electrode of this type hardening takes place more rapidly toward the center of the electrode than toward the outside. Thus in Fig. II we indicate the approximate zone of hardening. It is of course understood that this will not actually be a sharp line of differentiation but will be progressive.

When the contact studs are first inserted in the paste it is very soft but as the electrode moves downwardly it tends to harden so that the inner or lower ends of the contact studs gradually become engaged and locked in place by the hardening electrode so that even though the paste is fluid adjacent the heads of these contact studs, still the contact studs serve to preserve the casing in desired shape against the hydrostatic pressure.

If desired, the bearing faces of the projections or shoulders on the contact studs may be so shaped that when the contact studs are driven home in the soft electrode paste and these bearing surfaces are forced against the casing, the contact studs will assume the correct angle in the electrode.

Fig. V shows a portion of the fixed casing and of an electrode having a movable casing with the studs driven in so that they bear directly against the movable casing. In this figure the fixed casing is designated by the numeral **12**, the movable casing by the numeral **13** and the electrode mass by the numeral **14**. As before, the studs are designated by the numeral **5**. In this example the casing **12** has projections **15** spaced far enough apart so that the shoulders on the studs **5** bear directly against the casing **13**.

In the example shown in Fig. VI the structure is exactly the same as that shown in Fig. V except in this case the casing **12** is not supplied with the projections such as are designated **15** in Fig. V.

It is understood that the drawings are intended only to illustrate this particular invention and that many modifications and variations, many of which have been shown in previous patents relating to the Soederberg electrode system, may be employed in conjunction with the present invention.

What we claim is:

1. In a selfbaking electrode construction, an electrode mass having a casing which moves with it, a fixed casing within which the electrode mass can be collected having portions of its bottom edge sufficiently high so that contact studs can be driven into the electrode mass below such edge portions to enter a zone where the mass is still fluid but closely adjacent to a zone where interior portions of the mass have begun to harden, contact studs in approximately horizontal rows extending into the mass with their inner ends below their outer ends, and bearing surfaces near the outer ends of such studs cooperating with the movable casing so that as a row of studs moves downwardly and away from said edge portions of the fixed casing, the lower ends of such studs become anchored in the hardened interior portions of the electrode mass and said bearing surfaces serve to hold the movable casing in fixed position relative to such interior portion and thereby prevent the exterior portion of the electrode from becoming distorted by the hydrostatic pressure of the fluid mass.

2. A structure as specified in claim 1 in which the fixed casing has projections extending down between rows of contact studs and the bearing surfaces of the contact studs are shoulders which bear against these projections and act through these projections to cooperate with the movable casing to prevent the electrode from becoming distorted.

3. A structure as specified in claim 1 in which the bearing surface bears directly against the movable casing.

MATHIAS OVROM SEM.
JOHANNES SEJERSTED.

Jan. 11, 1944. G. HAGERUP-LARSSEN 2,339,230

SUSPENSION OF SELF-BAKING ELECTRODES

Filed April 17, 1943 3 Sheets-Sheet 1

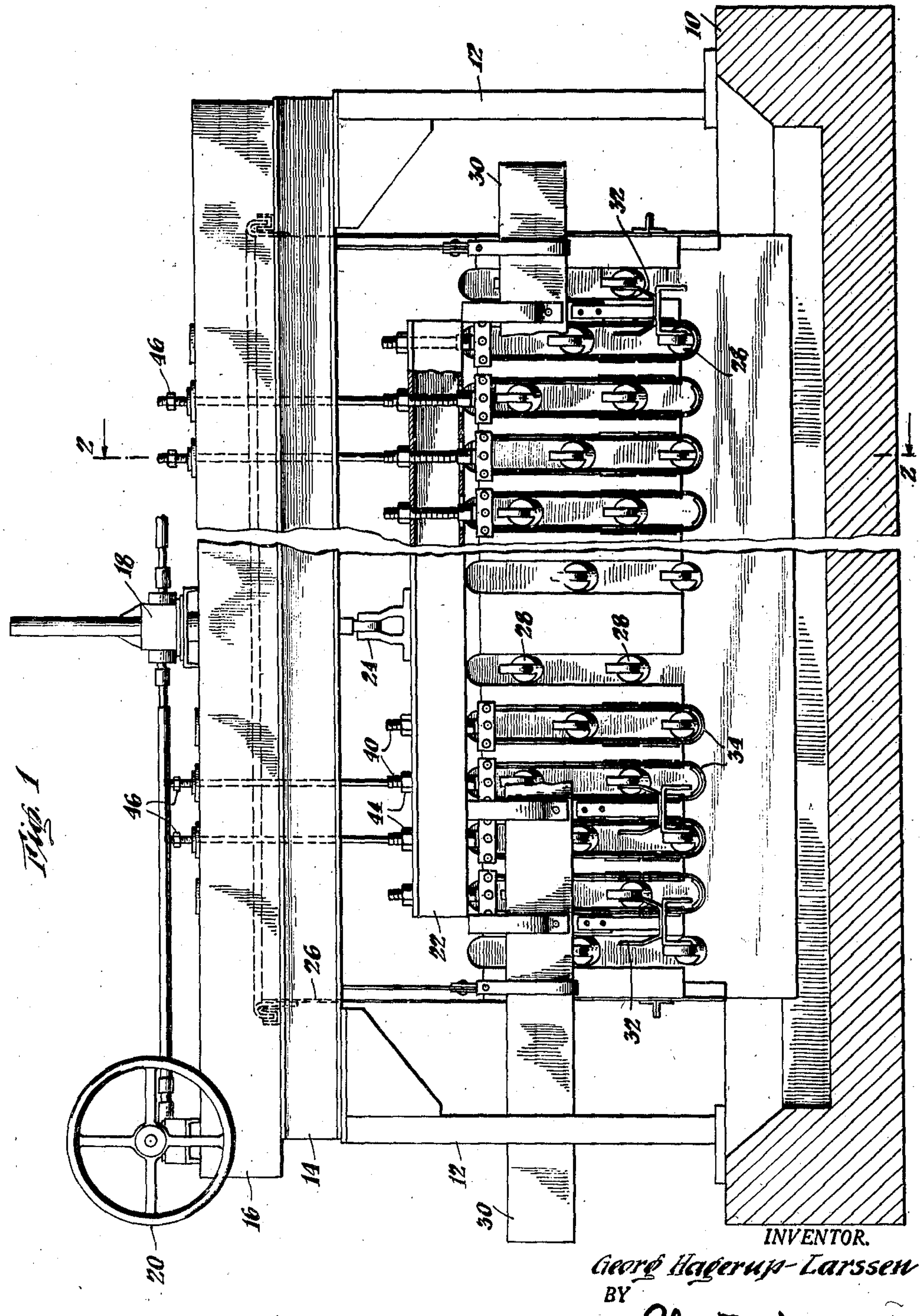

Fig. 1

INVENTOR.

Georg Hagerup-Larssen

BY

Alan M. Mann.

ATTORNEY

Jan. 11, 1944. G. HAGERUP-LARSSEN **2,339,230**

SUSPENSION OF SELF-BAKING ELECTRODES

Filed April 17, 1943 3 Sheets-Sheet 2

Fig. 2

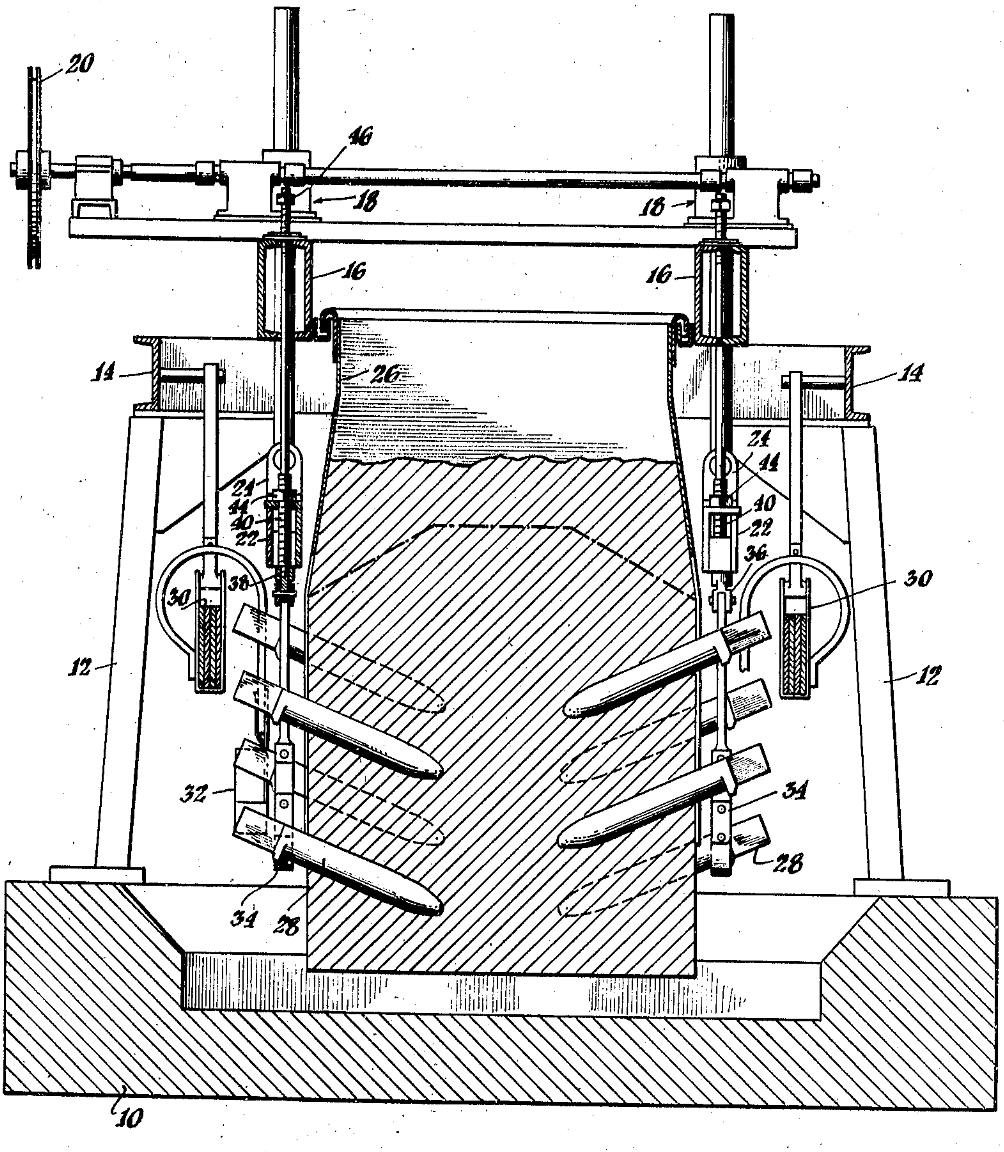

INVENTOR.

Georg Hagerup-Larssen

BY

Alan L. Maux

ATTORNEY

Jan. 11, 1944. G. HAGERUP-LARSSEN 2,339,230

SUSPENSION OF SELF-BAKING ELECTRODES

Filed April 17, 1943 3 Sheets-Sheet 3

Fig. 3

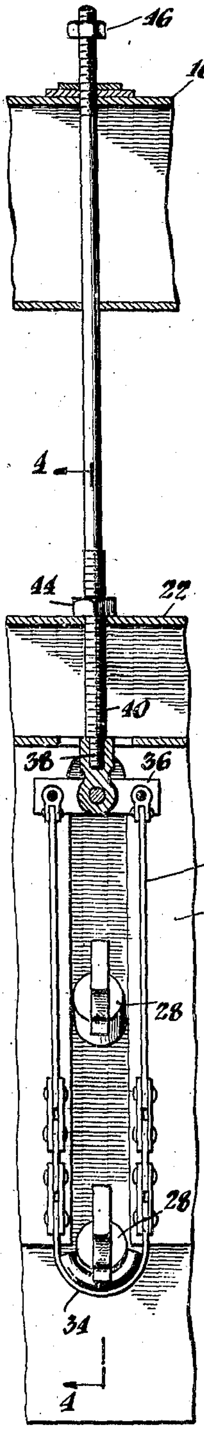

Fig. 4

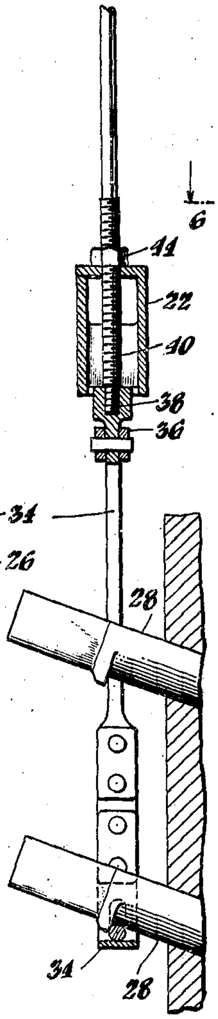

Fig. 5

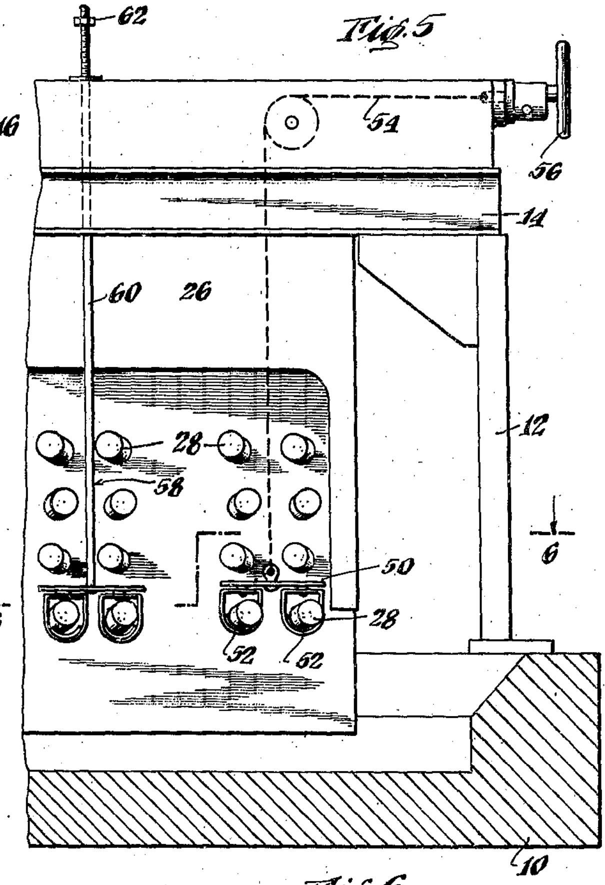

Fig. 6

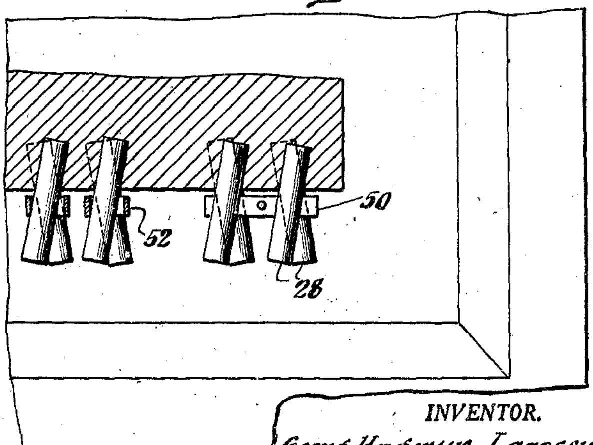

INVENTOR.

Georg Hagerup-Larssen

BY

Alan L. Mann.

ATTORNEY

Patented Jan. 11, 1944 **2,339,230**

UNITED STATES PATENT OFFICE

2,339,230

SUSPENSION OF SELF-BAKING ELECTRODES

Georg Hagerup-Larssen, New York, N. Y., assignor to Det Norske Aktieselskab for Elektrokemisk Industri, Oslo, Norway, a corporation of Norway

Application April 17, 1943, Serial No. 483,475

8 Claims. (Cl. 13—14)

The use of self-baking electrodes is now standard in many plants where electrolytic processes are carried on, particularly in the production of aluminum. Such electrodes ordinarily are made of rectangular shape and are quite large. The lower part of the electrode is baked and hardened by the heat of the furnace and has substantial strength, but the upper part of the electrode is in the form of a paste which has sufficient fluidity so as to exert a substantial hydraulic pressure tending to push out the sides of the electrode casing. To keep the electrode casing from bulging under this pressure, it has been customary to provide steel beams placed along the sides of the electrode and so to arrange them that as the electrode moves downward, the bottom beams could be periodically removed and again applied at the top.

In order to make the electrical contacts, contact pins are driven into the sides of the electrodes high enough up so that electrode material is still soft, and as the electrode moves downward and the electrode hardens, these pins become firmly imbedded. The contact pins heretofore have been driven through appropriate holes made in the side support beams, or these beams are arranged directly below the row of contact pins. Heretofore these support beams acting through a whole row of contact pins have served also as a suspension means for the electrode. Such an arrangement is shown for example in Torchet Patent No. 2,073,356.

As the use of these self-baking electrodes has increased, the tendency of the art has been to increase the size of the electrodes, and now they may be as large as 4 feet by 15 feet, or even larger. When the electrode has a length (maximum horizontal dimension) in this order, the beams necessary to act both to keep the electrode in shape and to suspend it, become heavy and cumbersome and demand the use of substantial amounts of steel. Other patents have disclosed mechanism for retaining the electrode in shape but when these support beams are eliminated, the manner of suspending the electrode so that it can be fed downward without interruption has offered substantial difficulties.

I have solved this problem by utilizing the fact that the strength of the electrode and its grip on the contact pins near the bottom is such that the electrode can be suspended from not more than half of the contact pins in a given horizontal row, and in many instances from as few as four such pins at one time. Utilizing this fact, I provide a suspension mechanism which comprises a support structure for the electrode, such as a steel framework surrounding the electrode well above the point of consumption, which cooperates with a plurality of groups of suspension members which suspend the electrode from the support structure by attachment direct to the contact pins.

Each such group of suspension members comprises suspension members of two types. One set or type is made up of movable suspension members which are connected with appropriate mechanism so that they can be lowered from time to time to feed the electrode toward the point of consumption. The other set of suspension members, at least one of which is included in each group referred to, is adapted to be connected to a contact pin near the bottom of the electrode and suspend the electrode direct from the support structure so that the electrode can be held substantially immovable when the contact pins to which the movable suspension members are connected are in approximately their bottom position. Thus when the movable members have been lowered about as far as is feasible, the suspension members which serve as fixed supports hold the electrode against further movement. This connection should be made manually at this time; it is possible, but not practical in ordinary operation to have this connection result from the fixed suspension members serving as a limit so that when the electrode reaches a given position, the weight of the electrode is automatically taken up by these fixed suspension members. In any event, when the fixed suspension members are supporting their contact pins, the movable suspension members can be disconnected and then raised and connected to an upper set of contact pins. The fixed connections are then released and disconnected from the contact pins to which they were connected and the suspension is again made through the movable members, so that the electrode can be fed downward as desired.

Various specific arrangements of the two types of suspension members in each group can be had, but I prefer an arrangement whereby the suspension members which serve as the fixed supports can also serve to support the electrode during its movement. I accomplish this by supplying a movable beam along each side of the electrode. The movable suspension members are connected to these beams and the beams in turn are connected with appropriate operating jacks. The suspension members which serve as fixed supports pass through these movable beams and also through fixed beams higher up in the structure, and are provided with appropriate stop devices, such as nuts threaded on rods, above each of these beams.

During the period that the electrode is being fed downwardly the nuts bearing against the movable beam will control the position of this suspension mechanism and therefore it will help to carry the weight of the electrode while the electrode is being fed downwardly. The nut at the top of the rod of such a suspension member above the fixed support should be so adjusted as not to interefere with the movement of the electrode, but when the contact pins of the row carrying the load reach approximately their bottommost position and the operator considers it is time to withdraw them, the top nuts are screwed down so that they will bear against the fixed support and prevent further downward movement of the electrode. The suspension members which serve only as movable suspension members are then disconnected from their contact pins and the nuts on the fixed suspension members which bore against the movable beam are screwed back so that these beams can be raised up until the movable suspension members are in line with, and can be connected to an upper row of contact pins. The nuts at the top of the fixed supports can then be slacked off, releasing the fixed suspension members which can be disconnected from their contact pins and then drawn upwardly by tightening up the nuts bearing against the movable beam until they also can be connected to contact pins in an upper row and again become part of the movable suspension mechanism.

This type of arrangement is usually employed with the contact pins in successive rows being placed in staggered relationship, which means that ordinarily a set of movable suspension members and fixed suspension members will be supplied for the different vertical rows of contact pins.

As an alternative construction, two sets of beams may be used, both of which are movable, and each set being capable of being moved independent of the other. In such case one of these beams would serve as a movable support cooperating with one row of contact pins and the other would serve as the fixed support (cooperating with the next upper row of contact pins) to hold the electrode immovable while the first set was being changed over. The function of the two beams could then be reversed and the beam which had been serving as the fixed support would become the movable support until the time arrived for another change.

According to another arrangement, the suspension is simplified by having the contact studs inserted into the electrode in pairs, thus employing one common suspension arrangement for two adjacent contact studs. In such case, a single suspension member may run to a yoke forming a cradle supporting the external end of two contact studs.

By this arrangement the weight is automatically distributed between the two fixed contact studs giving a very economical design. One movable suspension can run to two of the studs and a fixed suspension can run to another adjacent pair of studs. If this design is used with studs in staggered arrangement, the attachment to the short beam must be made off-center so as not to interfere with the intermediate row of contact studs. If the studs are placed in vertical rows and not staggered, there is a tendency for the electrode to be weakened by the formation of vertical cleavages and the electrical current may not be evenly distributed. These difficulties can be overcome by driving in the contact studs in pairs at different angles to a vertical plane perpendicular to the side of the electrode into which the pins are driven. For example, the studs in one row may lie in a plane at the usual angle to the horizontal but at a deviation of 20° to the left of a vertical plane perpendicular to the face of the electrode. The studs in the next row above and the next row below may be positioned in a similar manner but with a deviation of 20° to the right of such perpendicular plane.

This invention may be readily understood by reference to the accompanying drawings in which Fig. 1 is a side view of a furnace embodying my invention but broken through the middle to shorten the same; Fig. 2 is a section on line 2—2 of Fig. 1; Fig. 3 is an enlarged detail of one of the suspension members with the suspension beam shown in section; Fig. 4 is a view of the part shown in Fig. 3 but taken at right angles; Fig. 5 is a detailed view of a modification, and Fig. 6 is a section on line 6—6 of Fig. 5.

In these drawings, the furnace **10** has mounted thereon a superstructure comprising upright columns **12**, a top framework **14** and fixed suspension beams **16**. Toward each end of each beam **16** is positioned a jack **18**, and all four of these jacks are operated simultaneously by a common wheel **20**. It is to be noted that only two of the jacks are shown in the drawings as the other two will be near the other end of the furnace, within the portion that is broken away and not shown in the drawings.

Suspended below the beams **16** are the movable beams **22** connected to the jacks **18** as indicated at **24**. The beams **22** can be raised or lowered simultaneously by the operation of the hand wheel **20**.

The electrode is formed by introducing proper paste into the casing **26**. In accordance with the regular practice with such electrodes, this paste is hardened by the heat of the furnace so that it becomes a solid electrode at the bottom. Contact studs **28** are driven into the electrode mass through appropriate slots in the casing **26**. In the example shown in Figs. 1 and 2 there are four rows of these contact studs with the studs in alternate rows arranged in staggered relationship. The electrical connections to the contact studs **28** are made through the bus bars **30** and the contact members **32** each of which is here shown as carrying four contact terminals for attachment to contact studs as described in more detail in my copending application Ser. No. 436,585.

The weight of the electrode (which may be as much as 20 tons) is, during normal operation, suspended from the movable beams **22** by alternate suspension straps **34**. It is highly desirable to have the weight of the electrodes carried by the contact studs near the bottom where the electrode mass has the greatest strength. Accordingly these contact straps alternately sustain the electrode from those contact studs which form the lowest row.

As illustrated in Figs. 3 and 4, the contact straps **34** are connected through a yoke **36** with a rod **38**. The rod **38** has an enlarged threaded portion **40** running through the movable beam **22**, and this threaded portion **40** is here shown as provided with a stop mechanism in the form of a nut **44** which in normal operation bears against the top surface of movable beam **22**.

Certain of the suspension straps 34 end with the enlarged portion 40 but others (and at least one near each corner of the electrode) continues up through the fixed beam 16 and at its upper end is provided with a nut 46.

In Fig. 1 of the drawings, the device is shown in a normal position with the beam 22 lowered part way down. It will be noted that in this case the weight of the electrode is carried by the contact studs in the second and fourth vertical rows counting from the right hand end, and by the studs in the third and fifth vertical rows counting from the left hand end. Of these, the suspension mechanism supporting the stud in the second row from the right and the suspension mechanism supporting the stud in the fifth row from the left each terminates at the movable beam 22, whereas the suspension mechanism for the studs in the fourth row from the right and in the third row from the left run up through the fixed beam 16.

When the time comes to withdraw a bottom row of contact pins, the nuts 46 above the beam 16 are screwed down so that they will bear against the upper surface of this fixed beam. A slight further downward movement of the movable beam 22 will then release all strain from that beam. The contact straps which are suspended only from this beam can then be swung outwardly and disconnected from their contact pins and since the nuts 44 on those suspension rods which run up through the fixed beam are no longer carrying any load, these nuts are screwed up so that the movable beams 22 can be raised through the operation of the hand wheel 20. When this is done, the suspension straps 34 in line with the third and fifth row of studs counting from the right hand end and in line with the second and fourth row of contact studs counting from the left hand end will be drawn up against contact studs in the second horizontal row from the bottom to carry the weight of the electrode. The nuts 46 which previously had carried the load are then slacked off and the corresponding suspension straps are loosened up and disconnected. These rods are then lifted and the nuts 44 which has been unscrewed are again screwed back in place. The weight is then all carried by the second row of studs from the bottom and the bottom row of studs can be withdrawn and again inserted in the appropriate positions to form a new top row. The electrical connections usually are moved to an upper row of studs about one day before the suspension straps are moved. This helps to insure adequate strength.

By the arrangement shown the weight of the electrode is carried by a relatively large number of studs during normal operation and is carried by a smaller number of studs during the change when the weight is being transferred from one horizontal row to the next. However, at all times the weight of the electrode is adequately taken care of without risk of improper movement taking place. At the same time there are no heavy beams which need to be removed by hand from a bottom position and lifted up to a higher position, for the only beams that move are those which are operated by the hand wheel 20 which functions through the jacks 18.

It is obvious that as an alternative method of operation when the change-over is being made, instead of carrying the load on the contact pin in the fourth row from the right and in the third row from the left, the support mechanism cooperating with the contact pin in the third row from the right and the fourth row from the left may be drawn up to suspend the electrode from the fixed support beams 16. This is a somewhat less desirable method of operation as the electrode is then being carried by a limited number of contact pins in an upper row where the strength of the electrode may not have fully developed.

In Figs. 5 and 6 the studs 28 are driven into the electrode mass at the same angle relative to the horizontal as before but instead of being driven in parallel to a vertical plane perpendicular to the face of the electrode, alternate rows of these studs are driven in at an angle to such vertical plane with the angles in alternate rows being reversed. This is clearly illustrated in Fig. 6.

In this case, a movable suspension member comprises the yoke 50 having two loops 52 each one of which embraces a contact stud 28. The yoke 50 is connected to a flexible cable 54, so that it can be raised or lowered through the operation of a wheel 56. In connection with the movable suspension yoke 50 is another similar yoke 58 connected to a rod 60 running up through the fixed beam 16. This rod is equipped with a nut or similar stop mechanism 62.

With this construction the electrode is lowered with the weight carried by the movable yoke 50 and the cable 54 until it reaches approximately its bottom-most position when the nut 62 is screwed down to engage the top of the beam 16. The cable 54 is then slacked off slightly and the yoke 50 removed from the lower studs 28 and engaged around the two studs immediately above and the cable 54 is tightened until it is carrying the load. The nut 62 is then slackened and screwed up far enough not to interfere with operations and the yoke 58 is moved up to the next pair of studs. As before, the bottom studs are withdrawn from the electrode as soon as the suspension mechanism is removed from them and they are then driven in at the top where the electrode material is comparatively soft.

By either of these arrangements the weight is applied to a row of studs only when it is near the point where the electrode is consumed and when the electrode is thoroughly baked and hardened. As has already been stated, this may be insured if a day or two before the suspension members are changed and two to three weeks after the studs have initially been driven into the electrodes, the electrical connections are changed to an upper row of contacts so that the flow of electrical current will give a final baking effect.

It has been found that when the electrodes are thoroughly baked, it may take a force of as much as from 10 to 20 tons to pull out a contact stud where the contact stud has a diameter of about 70 mm. and is inserted for a distance of approximately 300 mm. into the electrode. From this, plus the fact that it has been found that the electrode has sufficient mechanical strength, it will be seen that four contact studs can carry the weight of the electrode during the change-over even with very large electrodes that may have a capacity of 45,000 amperes or more. Obviously there should be at least four supports at any one time to give stability, so that, as a practical matter, the total number of suspension members must be at least eight.

What I claim is:

1. A suspension mechanism for self-baking electrodes of the type described, comprising a

plurality of contact studs driven into the sides of such an electrode, fixed support members, movable support members, and a plurality of suspension members, a part of which are adapted to connect contact studs to the fixed support members and a part of which are adapted to connect contact studs to the movable support members, whereby the weight of the electrode may alternately be carried by the fixed support members and by the movable support members.

2. A structure as specified in claim 1 in which contact studs are connected to the movable support members during normal operation and movement of the electrode, and in which studs are connected to the fixed support members while the suspension members connected to the movable support member are disconnected from the studs.

3. A structure as specified in claim 1, which includes a common movable support member for two adjacent contact studs, such support member comprising a beam suspended at an intermediate point.

4. A structure as specified in claim 1 in which the suspension members that connect contact pins with the fixed support members are also adapted to connect contact studs to the movable support members while the electrode is being fed downwardly and are adapted to be disconnected from the movable support members when a movable support member is being moved upwardly.

5. A structure as specified in claim 1 in which the suspension members comprise flexible loops adapted to be hooked under the contact studs and in which the support members comprise beams running along the sides of the electrode.

6. A structure as specified in claim 1 in which the contact studs are driven into the electrode in horizontal rows with the studs in successive rows approximately above each other but at reversed angles relative to a vertical plane at right angles to the face of the electrode into which the studs are driven.

7. A suspension mechanism for self-baking electrodes of the type described, comprising a plurality of contact studs driven into the sides of such an electrode and arranged in horizontal rows, a fixed support structure for the electrode and a plurality of groups of suspension members adapted to suspend such electrode from such support structure by attachment to such contact studs, each group comprising at least two suspension members, one of such suspension members being a movable member adapted to be lowered from time to time to feed the electrode toward the point of consumption and another of such members in each group being adapted by direct connection between the fixed support structure and a contact stud to assist in holding said electrode against substantial movement when the contact studs to which the movable suspension members are attached are in approximately their lowest position, so that the electrode will be supported to permit the movable suspension members to be disconnected from the contact studs in one row and permit such movable suspension members to be connected to the contact studs in a higher row, and means whereby such suspension members holding the electrode against movement may be released when the movable suspension members are again connected to contact studs to support said electrode.

8. A suspension mechanism for self-baking electrodes of the type described, comprising a plurality of contact studs driven into the sides of such an electrode and arranged in approximately horizontal rows, two pairs of support members, a plurality of suspension members, at least four of which are adapted to connect contact studs to one pair of said support members and at least another four of which are adapted to connect contact studs to the other pair of said support members and means for moving at least one of said support members whereby the weight of the electrode may alternately be carried by said two pairs of support members.

GEORG HAGERUP-LARSSEN.

Patented July 2, 1946

2,403,301

UNITED STATES PATENT OFFICE

2,403,301

METHOD FOR MAKING ARTIFICIAL CARBON PIECES

André Richon, Sous-Geronde, Chippis, Valais, Switzerland

No Drawing. Application August 29, 1942,
Serial No. 456,716

5 Claims. (Cl. 18—47.5)

Artificial carbon pieces are made for different purposes, for instance for electrodes of arc furnaces, for the sole of electrometallurgical furnaces and so on. The method consists essentially in mixing a carbonaceous raw material with a binder and baking the mass at high temperature, eventually after pressing. One mixes for instance ground coke with a pitchy binder (for instance coal tar), presses and then bakes it for instance during several hours up to a temperature of say 1500° C. The pressing of the mass is done suitably in the heat, say at 60–140° C. When the making of carbon electrodes is in question one uses advantageously an extrusion press.

Artificial carbon pieces made by pressing are superior to artificial carbon pieces obtained by ramming or casting in molds the mass made sufficiently plastic by using a material of suitable size and adding a suitable quantity of binder. They are much denser, have a better electric conductivity and are less subjected to oxidation.

Thorough investigations carried out by the applicant on an industrial scale have shown that artificial carbon pieces made by casting can be considerably improved by subjecting the pasty or fluid mass to mechanical vibrations of high frequency. The frequency should amount to several thousand vibrations of an amplitude as large as possible, for instance of 0.25 cm., per minute. At 6000 vibrations per minute for instance the favourable effect can be noticed; however, it is better to work at 10,000 vibrations and more.

One produces the vibrations in the artificial carbon mass most suitably by immersing a vibrator into the mass. This is a device by means of which vibrations of high frequency can be communicated to the surrounding medium. Such devices are used for instance in the making of high-grade concrete. It is also possible to communicate the vibrations from the outside.

The artificial carbon mass to be treated becomes suitably heated, for instance up to 140–200° C., before being subjected to the mechanical vibrations. The fact that the mass becomes more fluid and shrinks shows the effect of the vibrations.

The artificial carbon pieces of suitable composition which are obtained by baking the mass which has been subjected to the vibrations show a much better density (lower porosity), a better mechanical strength and a better durability than the artificial carbon pieces obtained without vibrations by casting the mass according to known methods; the electric conductivity is also better.

It was surprisingly noticed that less binder is needed if the mass is subjected to vibrations.

In comparison with the pressing of the artificial carbon pieces the casting method presents the great advantage that one is not tied to any size or form. It is for instance possible to make the sole of aluminum producing furnaces by assembling a relatively small number of moulded artificial carbon blocks; it is thereby possible to make a part of the wall with a corresponding section of the furnace sole in one piece. Up to the present time such bottoms of aluminum production furnaces were made principally by ramming a suitable mass, which becomes baked after the starting of the furnace, or by assembling pressed artificial carbon blocks. Artificial carbon blocks made by casting were not successfully used up to now because of their insufficient durability and their high porosity.

The casting of a large artificial carbon block according to the present invention is carried out suitably in the following manner:

One pours at first the pasty mass into the mold up to a height of 20–50 cm., then introduces the vibrating device into the mass and fills the mold up to the desired height, and raising the vibrating device by degrees. As this motion is a relative one, the vibrating device can naturally remain at the same height, the mold being lowered with the same speed as it becomes filled; it is also possible to raise the vibrating device and lower the mold simultaneously.

The invention can also be applied to continuous self-baking electrodes such as are used in Söderberg furnaces or to the bottoms of certain re-melting furnaces. With continuous self-baking electrodes one pours the pasty electrode mass into a metal shell, the mass becoming baked in the neighbourhood of the furnace sole because of the high heat. The transition from the filling zone to the baking zone takes place by degrees. It is indeed also advantageous to subject the mass while still pasty to mechanical vibrations of high frequency according to the present invention.

Instead of subjecting the carbonaceous mixture to mechanical vibrations after the pouring into the mold or into the electrode shell, one can carry out this treatment before the pouring, for instance in a ladle. But it is generally easier to undertake a uniform vibration treatment in the mold itself.

I claim:

1. A method for making artificial carbon pieces by casting, comprising subjecting a coherent, pasty mixture of carbon and binder to mechanical

vibrations of a frequency of at least 6000 per minute and then baking the pieces.

2. A method for making artificial carbon pieces by casting, comprising subjecting a coherent, pasty mixture of carbon and binder to mechanical vibrations of a frequency of about 10,000 per minute and an amplitude of the magnitude of 0.25 cm. and then baking the pieces.

3. A method for making artificial carbon pieces by casting, comprising internally applying to a coherent, pasty mixture of carbon and binder mechanical vibrations of a frequency of at least 6000 per minute and then baking the mixture.

4. A method for making artificial carbon pieces by casting, comprising forming a coherent, pasty mixture of carbon and binder into bodies of desired shape, subjecting the formed bodies to mechanical vibrations of a frequency of at least 6000 per minute, and then baking the formed bodies.

5. A method for making artificial carbon electrodes by casting, comprising casting an electrode mass into a desired electrode shape and subjecting the formed electrodes to mechanical vibrations of a frequency of at least 6000 per minute.

ANDRÉ RICHON.

Jan. 17, 1950 R. TANBERG 2,495,148

METHOD OF MANUFACTURING CONTINUOUS ELECTRODES

Filed July 17, 1946

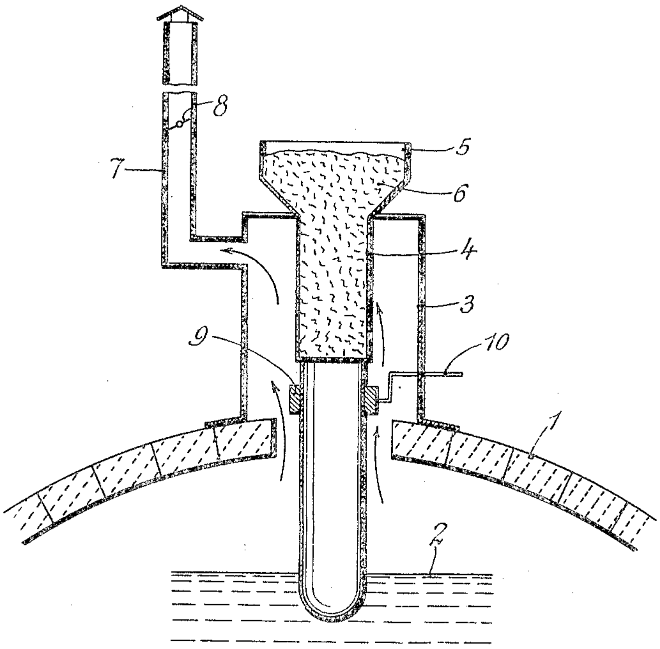

INVENTOR.
RAGNAR TANBERG

BY Francis J. Klempay

ATTORNEY.

Patented Jan. 17, 1950 **2,495,148**

UNITED STATES PATENT OFFICE

2,495,148

METHOD OF MANUFACTURING CONTINUOUS ELECTRODES

Ragnar Tanberg, Drammen, Norway

Application July 17, 1946, Serial No. 684,096
In Norway May 8, 1943

Section 1, Public Law 690, August 8, 1946
Patent expires May 8, 1963

3 Claims. (Cl. 13—18)

The known type of continuously self-burning electrodes is based on melting down in a sheet iron pipe a plastic mass consisting of crushed anthracite or coke, to which are added pitch and tar as binding agent. As this mass becomes completely liquefied by heating and firstly assumes a solid state and then is coked at relatively high temperatures, it is necessary that the sheet iron pipe follows the electrode mass down into the bath and is here corroded away with the same. It is here to be noted that coking of the mass is necessary in order to obtain a sufficient electrical conductivity.

Still another reason why the sheet iron pipe may not be separated from the mass is that the latter sticks and adheres to the sheet iron. The disadvantage of this electrode is that the sheet iron envelope increases the cost of the electrode, primarily because of the relatively high costs of manufacturing the envelope, which generally takes place by welding or riveting. Further the addition of iron received by the bath through melting down of the sheet iron pipe may act unfavorably in certain metallurgical processes.

A constructional form of self-burning electrodes has been suggested in which the sheet iron pipe or mantel is avoided by suspending the electrode at its lower portion, which has been burnt to such a degree that it has sufficient firmness to permit of the attachment of the suspension means.

The difficulty of constructing a continuous electrode without an iron mantel has been that one has had no binding agent for the mass which at a relatively moderate temperature imparts mechanical firmness to the same or permits of coking without the mass adhering to the mantel. If one is to operate with an electrode without an iron envelope, it is necessary to place the current supplying jaws a distance below the zone in which the electrode mass is sufficiently coked in order to be current carrying. In case this does not take place before at a very high temperature near the bath surface it will not be possible in practice to maintain a lasting current supply.

The present invention has for its object to avoid the disadvantages mentioned above in the completely continuous electrodes now used.

If the binding agent is of such a nature that it binds and cokes at a relatively moderate temperature, at 200°–300° C., for example it is possible in practice in this zone, without difficulty, to supply the current by means of ordinary current supplying jaws. Nor is it difficult at this temperature to undertake the necessary control of the rate of feeding of the electrode.

According to the invention it has been found that in evaporated sulphite waste lye from the cellulose industry or other aqueous solutions of saccharides, tanning acids, resins and substances which carbonize exothermally, for example lignin and derivatives of lignin of substantially the same composition as sulphite waste lye, one has a means which in an astonishing way fulfills the requirements of a binding agent for obtaining satisfactory results. Such materials give a binding agent which binds the electrode mass without the latter adhering to the surrounding iron mantel, because the mass shrinks and is solidified when subjected to light drying and because the coking begins at moderate, low temperatures and thereupon continues exothermally.

In practice one may easily produce such a solution with properties as mentioned above by evaporation of sulphite lye to a dry material content of about 50%. It has been found that in the use of an electrode mass based on the employment of sulphite lye as binding agent in so small quantities that the mass does not adhere substantially to the shaping iron cylinder, such a great binding power is obtained through a subsequent light drying at low temperatures that the electrode mass may be slid out of the shaping pipe and be sufficiently mechanically strong to constitute an independent electrode body which may be passed down into the melting bath without support from the shaping cylinder.

It has further been found that during the said drying of the mass the latter is completely released from the iron cylinder so that the ready dried and shaped electrode bar may be easily moved out of the shaping pipe.

It has been found that the quantity of sulphite lye which should be added in order to obtain a sufficient binding power may advantageously be fixed at between 10–35%, and that the subsequent drying may suitably take place at a temperature of above 150° C.–200° C.

By the expression sulphite waste lye as used above and in the claims shall be understood waste lye from the production of sulphite cellulose, regardless of whether it refers to the ordinary sulphite process, which operates with calcium bisulphite, or other sulphite processes, for example one in which ammonia bisulphite is used.

A solution according to the invention may eventually also be produced by the mixing of its individual components. By way of example may be mentioned a solution produced by mixing and heating to 80–90° C. of:

	Per cent
Glucose	5–10
Tannin	12–21
Natural resins	4–8
Calcium salt of ligno-sulphonic acid (finely divided or decomposed lignin)	17–28
Water	40–60

The mass which is mixed and stamped down into the shaping pipe and dried as mentioned above, has the quality that it cokes relatively easily at moderate temperatures because a temperature of about 250° C. will initiate a coking process which develops exothermally, whereby coking is easily obtained.

Because in the melting processes for which this type of electrodes is employed ample heat quantities of the temperatures here discussed are available, it follows that in practice one may expedite the coking of the electrode mass so that it becomes sufficiently electrically conductive for the connection of electric current supplying jaws at a point of the electrode bar at which the temperatures are still so moderate that this may be done without practical difficulties.

As will be understood, the invention will be particularly applicable in connection with a stationary pipe or mantel, mounted above the bath, which shapes the electrode and holds it together until the mass, through the influence of heat, has turned consistent so that it may be passed down into the furnace as it is being consumed.

According to an embodiment of the invention there is mounted around the shaping pipe or mantel, a casing of heat resisting material, through which the hot gases from the melting bath are passed in such a way that the pipe and consequently the electrode mass is heated to a few hundred degrees, so that the mass which is passed through the pipe stiffens and hardens and forms a firm, glutinated mass. In the appended drawing this embodiment is shown diagrammatically: **1** designates the furnace arch, **2** the bath surface and **3** the casing of heat resisting material mounted on the furnace arch. In the upper closed end of this casing is placed the shaping pipe **4**, which at the top is provided with a funnel shaped expansion **5** in which the electrode mass consisting of a premixed mass of, for example 90% coke- and/or anthracite powder and about 10% concentrated sulphite lye is stamped down. The hot gases from the furnace pass through the casing **3** and out through a discharge pipe **7**, which is provided with a control damper **8**. Through influence of heat from the gas the electrode mass will first stiffen and thereupon coke to a consistent electrode. Below the pipe **4** are mounted current supplying jaws, indicated by **9**. The current is supplied through the lead **10**, which is suitably passed through the casing **3**.

I claim:

1. In the process of forming continuous electrodes from a mixture of a crushed carbonaceous material and a binding agent for electric furnace use, the improvement which consists of employing evaporated waste sulphite lye as the binding agent, said evaporated waste sulphite lye having a dry material content of 50–60% and constituting from 10% to 35% of the total electrode mass.

2. In the process of forming continuous electrodes from a mixture of a crushed carbonaceous material and a binding agent for electric furnace use and wherein the mixture is glutinated and coked in a heated guiding mantel, the improvement which consists of employing evaporated waste sulphite lye as the binding agent, said evaporated waste sulphite lye having a dry material content of 50–60% and constituting from 10% to 35% of the total electrode mass.

3. The process of claim 2 further characterized in that the mixture of the electrode forming materials is heated to a temperature of from 150° to 300° C. while in said mantel.

RAGNAR TANBERG.

REFERENCES CITED

The following references are of record in the file of this patent:

UNITED STATES PATENTS

Number	Name	Date
617,979	Acheson	Jan. 17, 1899
704,993	Weber	July 15, 1902
722,411	Shode	Mar. 10, 1903
964,268	Johnson	July 12, 1910
1,434,395	Menersmann	Nov. 7, 1922
1,483,507	Brockbank	Feb. 12, 1924
1,498,582	Soderbert	June 24, 1924
1,544,151	Helfenstein	June 30, 1925
1,640,735	Soderberg	Aug. 30, 1927
1,757,695	Westly	May 6, 1930
1,983,267	Browne et al.	Dec. 4, 1934
2,073,356	Torchet	Mar. 9, 1937
2,154,271	Higgins	Apr. 11, 1939
2,159,183	Sem	May 23, 1939
2,169,563	Legeron	Aug. 15, 1939
2,185,772	McMullen	Jan. 2, 1940

FOREIGN PATENTS

Number	Country	Date
294,661	Germany	1916
27,784	Norway	1917
44,046	Norway	May 23, 1927
154,016	Austria	1938
500,455	Great Britain	Feb. 9, 1939

Patented July 14, 1953 **2,645,583**

UNITED STATES PATENT OFFICE

2,645,583

METHOD OF PREPARING CARBON BASE PASTES

Stefan Stanko, Saint-Jean de Maurienne, France, assignor to Pechiney-Compagnie de Produits Chimiques et Electrometallurgiques

No Drawing. Application July 14, 1949, Serial No. 104,797. In France May 30, 1949

6 Claims. (Cl. 106—56)

This invention relates to the preparation of carbon-base pastes, more particularly pastes made of agglomerated carbon particles of the type used in various branches of industry and especially in electro-thermal and electrolytic manufacturing processes, for the manufacture of current-supply electrodes. Also, agglomerated carbon is sometimes used in forming the internal lining of electric furnaces and electrolysis cells.

Such agglomerated carbon compositions are made from pastes, which comprise carbon powder mixed with a binder and then shaped in molds. Some types of agglomerated compositions are fired in special furnaces prior to their use in electrothermal manufacturing operations or in electrolysis cells, the said firing step sometimes even being pursued to the point of graphitizing the agglomerated carbon particles. In other cases, the agglomerated carbon particles are subjected to firing within the electrothermal furnace or the electrolysis cell during actual operation, as in the case for instance of continuous electrodes of the Söderberg type.

However, regardless of the particular use to which they may subsequently be put, the quality of such agglomerated products essentially depends on the quality of the carbon pastes from which they are formed.

It is well known in this connection that, in addition to the choice or control of the granulometric composition of the carbonaceous product and the type of binder used, it is important that the particles of the carbonaceous product in contact with the binder should be effectively wetted by said binder throughout the entire surface of each individual particle, if it is desired that the final electrodes resulting from said paste should possess optimum characteristics. It is only when the particles or grains are thoroughly wetted by the binder that a desirably intimate bond is secured between the paste constituents and that it is possible to eliminate the mechanical losses which occur in service with inadequate bonded pastes. It is further known that in order to obtain as thorough as possible a wetting of the dry carbonaceous material by the binder, said carbonaceous material, which generally comprises a mixture of different sizes of particles, is first bodily introduced into a mixer or the like, then heated to a predetermined temperature, and the binder is thereafter introduced and the mixing operation is continued until a homogeneous mass is obtained.

However the procedure just described, while universally followed, presents a number of shortcomings. The finer particles form a stable suspension with the binder, and said suspension, in which the said fine particles comprise the dispersed phase, follows the laws generally prevailing in nonhomogeneous liquids. As the concentration of fines increases in the suspension, the suspension increases in viscosity so that, for a sufficient concentration of fines in the suspension, the viscosity number of the suspension reaches a value which is a multiple of the viscosity of pitch. In mixing with the binder carbonaceous materials having various particle sizes, the suspension of fines in the binder reaches such a high viscosity value that it becomes unable of wetting the entire surface of the particles and can only partially, if at all, fill the pores thereof. In addition, the pores of the particles are initially filled with finer particles which prevent the penetration of the pitch or of the fines-pitch suspension. This effect by itself may cause formation, within the mass, of totally unwetted agglomerates of particles. Such a paste does not possess a desirably intimate bond between its constituents, and the parts molded therefrom will not possess optimum characteristics after firing. An incomplete wetting of the grain surfaces, and/or the presence of entirely unwetted particles in the mixture results in losses occurring in the utilisation of electrodes made from such compositions, said losses assuming the form of a production of coal-dust.

It is an object of this invention to provide an agglomerated carbon-base composition which is generally free of the above defects. According to my invention, the carbonaceous material, ground to the form of a carbon dust comprising particles of various sizes, is separated into two fractions, a cruder and a finer fraction. The cruder fraction, which may range in weight from 30% to 75% of the total weight of coal dust, is separately mixed with the binder until all of its constituent particles are thoroughly wetted by the binder; the balance of finer carbonaceous material is then added, and mixing is continued until a final mixture of highest possible homogenity is obtained.

The carbonaceous starting material used may vary to a large extent depending on the characteristics desired in the final paste. When petroleum coke and pitch coke are used, as in the production of high purity electrodes, particles are obtained after the grinding step in which the pores may reach comparatively large sizes, e. g. 0.3 mm. and more. When such coke materials are used to make carbon pastes according to the invention, separation of the dust into two fractions is so effected that the smallest-sized grains of the cruder fraction will be similar in size to the pores of the largest-sized grains therein. On the other hand, if the carbonaceous starting material used is metallurgical coke or anthracite, which once ground provides particles in which the pores are exceedingly small, the separation of the dust batch into two fractions should be so accomplished that the smallest-sized grains of the cruder fraction should have a dimension of about 0.2 mm.; for, should this minimum limit be exceeded, the resulting suspension formed with the particles during the mixing step would be so viscous that it would not insure a complete wetting of the grains. The subsequently added fines act to saturate the binder and form a suspension therewith, and a final paste is thus produced in which the pores of the particles and the gaps between the particles are completely filled and in which the surface of all the grains is completely wetted. A thoroughly bonded paste is thus obtained and one in which the structure is thoroughly uniform, and, after baking, the resulting molded part is found to possess optimum characteristics.

The crude coal dust fraction may also be first wetted with only part of the total requisite amount of binder, the balance of binder material being added subsequently at the same time as the finer dust fraction is added. The binder may be added in liquid condition, and the mixing operation is then more rapidly completed; however the binder may also be added in solid condition as for instance when the binder used is dry pitch; in such a case, the wetting of the particles can only be accomplished upon liquefying the pitch by application of heat.

In the production of a paste for electrodes, when the method of the invention is used, it is found that in order to obtain an adequately fluid paste, it is necessary to add from 1% to 3% more binder (e. g. pitch) if the particle fraction without fines is first mixed with the binder, and the fines are only added upon completion of the mixing step, than when following the conventional procedure involving simultaneous mixing of the entire batch of particles with the binder. This fact can only be explained in one way, i. e. that when the entire batch is treated with the binder (such as pitch) according to conventional procedure, the entire surface area of the particles is not wetted by the binder, whereas it is wetted to a much greater extent when the procedure of the invention is used.

Example I

A batch of carbonaceous material used in the manufacture of Söderberg paste, had the following granulometrical composition:

3-5 mm.	2-3 mm.	1-2 mm.	0. 2-1 mm.	0. 075-0. 2 mm.	0-0. 075 mm.
1. 7%	1. 8%	8. 2%	31. 2%	10. 5%	46. 6%

A Söderberg paste, when produced from a pulverized material of the above granulometry by the conventional methods of mixing, should have a pitch content of 28% in order to possess satisfactory fluidity. The above mixture of particles was treated according to the present invention with the binder, which in the case in hand was hard pitch, that is a pitch having a Krämer-Sarnow softening point not less than 70° C. The operating procedure was as follows: the particle fraction in the range of from 0.2 to 5 mm. was first mixed with the hard pitch until the pores of the particles were filled and the surface of all the particles entirely wetted. Then the particle fraction of a size less than 0.2 mm. was added, and the mixing was continued until a homogeneous mass was obtained. The resulting Söderberg paste, in order to have satisfying fluidity, should contain 29.5% pitch, i. e. 1.5% more than when the conventional mixing procedure is used.

A Söderberg electrode paste was thus obtained which, after shaping and baking, showed the following characteristics as compared with those of a paste produced according to the conventional mixing practice:

	Electrode obtained by conventional mixing method	Electrode according to the invention
Apparent sp. gravity	1. 42	1. 36
Porosity, Percent	25. 3	28. 4
Resistivity, ohms, mm. sq./mm	84	59
Crushing strength, kg./cm. sq	268	290

Instead of adding the binder (e. g. pitch) in liquid condition to the divided carbonaceous material, the binder may be added in the solid state. In such case, the grain fraction in the 0.2 to 5 mm. range is first mixed with the solid binder. During this mixing step, heat is applied until the binder is completely liquefied, and only after the cruder particles are completely wetted by the liquefied binder, the particles in the range of sizes finer than 0.2 mm. are added, and mixing of the whole batch is continued until the mixture has attained its highest possible homogeneity.

Example II

Baked electrodes used in the electrolytic production of aluminium were manufactured from a petroleum-coke base carbonaceous paste, in which the average size of the pores was of the order of 0.3 mm., the granulometric composition of the coke-dust being as follows:

	Percent
3.33–2.76 mm	7
2.76–1.77 mm	9
1.77–0.76 mm	16
0.76–0.29 mm	15
0.29–0.16 mm	13
0.16-0.075 mm	17
0.075–0 mm	23

According to the invention, the particle fraction of from 3.33 to 0.29 mm. was first wetted with the binder, specifically hard pitch as in the foregoing example, then the remaining carbon dust (particles from 0 to 0.29 mm. in size) were added. The batch was thoroughly mixed and the resulting mass was molded under pressure. After firing, an electrode was obtained which has the following characteristics, against the corresponding characteristics of another electrode produced using the conventional mixing procedure:

	Conventional electrode	Improved electrode
Resistivity, ohms, mm. sq./m	73	54
Crushing strength, kg./cm. sq	245	315

Example III

A paste, intended for use as a coating for the internal lining of a furnace, was constituted by a mixture of 25% anthracite and 75% metallurgical coke, of the following granulometrical composition:

	Percent
5.54–2.67 mm	3
2.67–1.77 mm	6
1.77–0.99 mm	5
0.99–0.45 mm	21
0.45–0.19 mm	21
0.19–0.075 mm	23
0.075–0 mm	21

The anthracite used was not porous and the pores of the metallurgical coke were less than 0.2 mm. in size. According to the invention, the particle fraction of from 5.54 to 0.19 mm. was first wetted with the binder. The binder used in this example specifically comprised soft pitch, i. e. pitch having a Krämer-Sarnow softening point in the range of from 40° C. to 50° C. Then the particle fraction including the sizes from 0 to 0.19 mm. was added and the whole batch was intimately mixed.

Example IV

Electrode pastes intended for use in electrothermal production processes comprised a mixture of 70% anthracite and 30% metallurgical coke, having the following granulometric composition:

	Percent
25.4–11.9 mm	6
11.9–5.54 mm	7
5.54–2.67 mm	17
2.67–1.77 mm	5
1.77–0.99 mm	4
0.99–0.45 mm	4
0.45–0.19 mm	8
0.19–0.09 mm	22
0.09–0 mm	27

The anthracite used was not porous, and the metallurgical coke constituent provided the finer grains, less than 0.16 mm. in size. Thus the carbon particles were practically free of pores. According to the invention, the particle fraction of from 25.4 to 0.19 mm. was first wetted with the binder. The binder composition used by way of example in this operation comprised a mixture of hard pitch and coal-tar. Then the grain fractions in the range of sizes from 0 to 0.19 mm. were added and the whole batch intimately mixed. An electrode paste was thus obtained which, after molding and firing, gave the following comparative test results:

	Conventional electrode	Improved electrode
Resistivity, ohms, mm. sq./m.	61	51
Crushing strength, kg./cm. sq.	295	375

Example V

A carbon paste for graphitized electrodes comprised, by way of example, petrol coke of the following granulometric composition:

	Percent
1.30–0.62 mm	22
0.62–0.29 mm	21
0.29–0.16 mm	7
0.16–0.10 mm	18
0.10–0.075 mm	4
0.075–0.058 mm	4
0.058–0.050 mm	4
0.050–0 mm	20

The average dimension of the pores was about 0.3 mm. According to the invention, the particles in the range of sizes of from 1.3 to 0.29 mm. were first wetted with the binder, which in this instance was hard pitch. Then the particle fractions in the range of from 0 to 0.29 mm. were added and the whole batch intimately mixed together. An electrode paste was obtained giving the following comparative test results:

	Conventional electrode paste	Improved electrode paste
Apparent specific gravity	1.675	1.718

It will of course be understood that the invention is in no way limited to the details of procedure and compositions specifically mentioned in the above examples, and that the scope of the invention is to be construed as defined exclusively by the ensuing claims.

What I claim is:

1. Method of producing a carbon paste from a batch of finely divided solid carbonaceous material and a binder for said carbonaceous material wherein the carbonaceous material consists of particles of various sizes, which comprises the steps of separating the batch of carbonaceous material into two fractions constituted respectively of relatively coarse particles and fines whereby the smallest-sized particles in said fraction of relatively coarse particles are substantially similar in size to that of the pores of the largest-sized particles therein, mixing said binder with the fraction of coarse particles until substantially all of said coarse particles are wetted by said binder, adding the fines to the wetted coarse particles and continuing the mixing operation until no further noticeable increase in the homogeneity of the resultant mixture is observed.

2. A method according to claim 1, characterized in that the separated fraction of relatively coarse particles represents about 30 to 75% by weight of the total amount of the batch of finely divided carbonaceous material.

3. A method according to claim 1, wherein the smallest-sized particles of said fraction of relatively coarse particles have a dimension substantially equal to 0.2 mm.

4. A method according to claim 1, wherein said fraction of relatively coarse particles is wetted with only a portion of the total amount of binder used in the preparation of the paste, and the balance of said binder is added together with said fines.

5. A method according to claim 1, wherein said binder is added in liquid condition.

6. A method according to claim 1, wherein the fraction of relatively coarse particles is mixed with a binder in solid condition, heat is applied to fluidify said binder during mixing to thoroughly wet said coarser particles, the fines are added, and the mixing of the entire batch is continued until no further noticeable increase in the homogeneity of the resulting mixture is observed.

STEFAN STANKO.

References Cited in the file of this patent

UNITED STATES PATENTS

Number	Name	Date
1,317,497	Hinckley	Sept. 30, 1919
2,563,285	Shea et al.	Aug. 7, 1951

UNITED STATES PATENT OFFICE

2,653,878

PROCESS FOR THE PRODUCTION OF ELECTRODES

Johannes Sejersted and Oluf Christian Böckman, Oslo, Norway, assignors to Elektrokemisk A/S, Oslo, Norway, a corporation of Norway

No Drawing. Application November 18, 1949, Serial No. 128,252. In Norway November 20, 1948

4 Claims. (Cl. 106—56)

This application relates to the production of carbon electrodes for the electrolysis of molten salts. More particularly, it relates to the production of carbon anodes used in the electrolytic production of aluminum metal. Our invention is of particular importance when the anode is of the self-baking or so-called Soederberg type, but it is also useful with other types of electrodes such as the so-called "prebaked" types.

In the electrolytic production of aluminum, the carbon anode serves for introducing the electric current into the bath and at the same time acts as a reductant. The oxygen liberated by electrolysis at the anode reacts with the carbon of the anode to form a mixture of carbon dioxide and carbon monoxide which leaves the furnace as the anode gas. The consumption of anode carbon is fairly high and amounts in commercial operation to 50 to 60% of the weight of the produced aluminum metal.

The carbon anode consists of pitch coke, petroleum coke, purified anthracite or the like known as the "dry material" of the electrode. This dry material is crushed and screened to a suitable size and then mixed with a binder such as coal tar, coal tar pitch or the like. The resulting mixture is then shaped and carbonized to transform the binder into coke thus producing a coherent carbon anode.

In some installations the mixture of dry material and binder is compressed to shape and then carbonized in a special furnace made for that purpose. Such electrodes are known as "prebaked" electrodes. Under another system the mixture of dry material and paste is used for forming continuous electrodes which are sometimes called "self-baking" or Soederberg electrodes. The present invention is of particular value in connection with the latter type of electrodes.

One of the difficulties with the carbon electrodes is their tendency to form carbon dust in the molten electrolyte. The carbon dust in the electrolyte does not take part in the electrolysis and represents a loss of anode carbon. What is even more important is that the carbon dust accumulates in the electrolytic bath and tends to cause trouble in the operation of the furnace so that it is necessary to remove the dust from the bath at intervals. This removal disturbs operations and tends to cause serious losses of the valuable fluoride salts which make up the electrolytic bath. It is therefore of great importance to be able to produce carbon anodes which

produce as little carbon dust as possible in the electrolytic bath.

We have discovered that the tendency to form carbon dust in the bath is due to different qualities in the ground coke or so-called "dry material" of the electrode as compared with the baked binder with which the dry material has been bound together. We have further discovered that anodes which are greatly superior as regards the formation of dust can be produced if the dry material of the electrode has been given its preliminary calcining at a temperature of not over 1200° C. (and preferably at a temperature not over 1100° C.) and if the coke from such dry material has a reactivity to carbon dioxide (determined in the manner hereinafter set forth) which is at least 75% of the reactivity (determined in the same manner) of the coke resulting from the baking of the binder.

We have discovered that there are three characteristics or qualities of the coke making up the entire electrode which tend to cause the coked binder to be eaten away before the particles of coke introduced as the dry material. When the binder is thus eaten away, particles of the dry material coke are released and fall into the bath forming the carbon dust which we seek to avoid.

The first of these characteristics is the behavior of the coke when the so-called "anode effect" occurs. It is well recognized that as the quantity of alumina dissolved in the bath is reduced, a point is gradually reached at which the bath does not adequately wet the electrode and the voltage necessary to cause the current to pass through the cell rises rapidly. We have found that in electrodes now in use the anode effect occurs more rapidly with the particles of coke introduced into the electrode as the dry material than with the coke resulting from the baking of the binder. Thus there is a period when virtually all of the activity of the electrode is working through the binder coke due to the fact that the bath is no longer wetting the bound particles. This tends to cause the binder coke to be eaten away more rapidly than the other particles, with the result that dust is released.

The second characteristic has to do with the difference in anodic electro-chemical over-voltage between the two types of coke. The over-voltage in a bath of this type means the voltage over and above the theoretical necessary to produce the desired electrolysis. We have found that a greater over-voltage is required with the usual particles of coke introduced as dry material than with the coke resulting from baking of the binder. Again, this causes more rapid disintegration of the binder coke.

The third characteristic is the difference between the two cokes in reactivity toward carbon dioxide. When, through electrolysis, the oxygen is disassociated from the alumina in the bath it tends to form carbon dioxide with the carbon of the electrode mass and this carbon dioxide tends to act on additional quantities of carbon present to form carbon monoxide. We have found that ordinarily there is a difference in the reactivity toward carbon dioxide of the coke resulting from the dry material and the coke resulting from the baking of the binder. This difference in reactivity ordinarily is quite appreciable, with the binder coke showing the greater reactivity so that again it tends to be eaten away more rapidly.

While the three characteristics may be separately determined, we have found that for practical purposes all of them can be approximately measured by measuring the reactivity of the coke to carbon dioxide. Using this test, we have found in general that where the coke is given a preliminary baking at high temperature its reactivity is reduced and at the same time its action relative to the anode effect and electrochemical over-voltage are made less desirable.

Ordinarily the coke used as the dry material is calcined at a temperature of 1400° C. to 1500° C. and it must be remembered that in producing aluminum by the Soederberg system of continuous electrodes the temperature at which the binder is calcined never exceeds 950° C. As a result, there is a great difference in the characteristics of the two types of coke found at the operating surfaces of the electrode. Even in the case of prebaked electrodes the calcining temperature of the finished electrode does not exceed about 1300° C. so that in this case also there is a marked difference in the coke characteristics.

We have determined that as a practical matter the critical line where the difference in characteristics of the two types of coke becomes effective is found where the reactivity of the coke resulting from the dry material is at least 75% of the reactivity of the coke actually resulting from the calcination of the binder. With a smaller difference in characteristics the formation of dust is so small as to be substantially negligible but beginning at about the figure named, the tendency to form dust increases rapidly. We have found that for general operating conditions in order to get the necessary similarity of coke characteristics, the dry material should not be calcined at a temperature above about 1100° C. However, by careful selection and control, it is possible to get the desired results at a somewhat higher temperature, and therefore we set as our top limit for the calcination of the dry material the temperature of 1200° C.

For the purposes of determining reactivity as we use the term in this application, we have developed a particular type of test as follows:

A known volume of the coke to be tested is crushed and screened between sieves of values of 20 and 35 on the Tyler screen scale. This coke is placed inside a closed silica tube (the one which we employed was 17 mm. inside diameter), the coke resting on a perforated disk of alloy metal. The tube is heated to a temperature of 950° C. in a vertical tube furnace, the temperature being measured by a thermocouple in the center of the sample. A stream of pure carbon dioxide is passed through the bed of coke at a known rate. For example 100 mg. of CO_2 are passed through in 5 minutes. This rate of flow of CO_2 going into the tube we call a. At the temperature employed, a certain amount of the carbon dioxide reacts with the coke sample to form carbon monoxide. To determine the amount reacted we determine the rate of flow of CO_2 coming out of the tube (by gravimetric determination) and call this value b. In other words, the amount of CO_2 reacted by the coke is $(a-b)$.

For our purposes we use the natural logarithm of the ratio of the amount of CO_2 going into the tube during a given time interval (a) to the amount of CO_2 found to be coming out of the tube during the same time interval (b). Thus stated as a formula and terming the rate of reactivity as Y we have

$$Y = \text{nat. log.}\,\frac{a}{b}$$

In determining the relative reactivities of various samples the same amounts of the coke should be employed in each case and they should be ground to the same fineness.

By using this method we have determined the relative reactivity of different cokes. Some of the results are given below:

A number of different binders of the types employed commercially were coked and calcined at 950° C. These gave reactivities of Y ranging between .31 and .59.

On the other hand, raw petrol coke calcined at different temperatures has given the following values:

Temperature of Calcination, ° C.	Reactivity Y
950	0.38
1,100	0.26
1,300	0.20
1,500	0.18

From the foregoing figures if we consider a carbon anode composed of coke calcined at 1500° C. (a usual temperature) as the dry material and a binder coke giving a relatively high degree of reactivity calcined at 950°, it will be seen that the relative reactivities of the two will differ very substantially. In fact, from the table shown, the reactivity of the binder coke may be more than three times that of the dry material. By maintaining the calcination temperature of the dry material below 1200° its reactivity is materially increased. At the same time, a binder should be selected such that the reactivity of the dry material coke is at least 75% of the reactivity of the binder coke. By using the method specified above the relative reactivity of the two materials can readily be determined.

As is well understood in the art of making the carbon electrodes the electrode ordinarily consists of pitch coke, petroleum coke or purified anthracite coal. The binders are made of such materials as coal tar, coal tar pitch or the like all of which may be classified as "bituminous pitches."

In carrying out our invention the desired material for the dry coke is calcined at a temperature of between 1000° C. and 1200° C. A sample of binder material is then calcined at the temperature at which the electrode is to be formed, which in the case of a continuous electrode will be 950° C. The relative reactivities of the two cokes are then tested. If the coke from the dry material has a reactivity of at least 75% of the test sample of binder material coke, then the selected binder and coke can be combined and used in the usual manner.

In the case where the coke is to be used in the continuous electrode system, a so-called "paste" is formed following in general the instructions of U. S. Patent No. 1,670,052, issued May 15, 1928. By terming the material a "paste" we do not intend to imply that the material is necessarily pasty at ordinary room temperatures. In fact, it is now customary to use a binder having a melting point in the order of about 100° C. so that at normal temperatures the electrode material is solid for handling. The important thing is that the mass when heated in the electrode holder shall become soft enough to assume the shape of the holder without tamping.

If when the test described above is run, it is found that there is too great a difference in reactivity between the dry material coke and the sample of binder coke, it may be possible to select a different binder coke, but it ordinarily will be easier and preferable to lower the temperature at which the dry material coke is originally calcined.

Paste made in this manner is a great improvement on the pastes now being used and when these instructions are followed, it will be found that the resulting electrode will have an appreciably greater life than those heretofore formed and will result in much less carbon dust being formed in the electrode bath.

What we claim is:

1. A method of preparing mixes for use in electrodes which comprises selecting bituminous pitch as a binder material, carbonizing a sample

of such binder material at approximately the temperature at which the electrode is to be carbonized, testing the reactivity of such sample to CO_2 as herein defined, calcining dry material selected from the group consisting of pitch coke, petroleum coke and purified anthracite at a temperature below 1200° C. and at a temperature low enough so that the reactivity thereof to CO_2 as herein defined is at least 75% of the reactivity of the test sample of binder material and combining such dry material in powdered form with the binder material.

2. A method as specified in claim 1 in which the binder material sample is carbonized at a temperature of about 950° C.

3. A method as specified in claim 1 in which the binder material sample is carbonized at a temperature of about 950° C. and the dry material is calcined at a temperature below 1100° C.

4. A method of preparing so-called paste for use in electrodes which comprises combining together bituminous pitch as binder material and dry pulverulent carbonaceous material selected from the group consisting of pitch coke, petroleum coke and purified anthracite, such dry material having been calcined at a temperature not in excess of 1200° C. and having a reactivity to CO_2 as herein defined equal to at least 75% of the reactivity to CO_2 of a sample of the binder material carbonized at 950° C.

JOHANNES SEJERSTED.
OLUF CHRISTIAN BÓCKMAN.

References Cited in the file of this patent

UNITED STATES PATENTS

Number	Name	Date
655,920	Burke	Aug. 14, 1900
887,123	Price et al.	May 12, 1908
1,317,497	Hinckley	Sept. 30, 1919
1,670,052	Soderberg	May 15, 1928

Jan. 12, 1954 F. C. E. JOHANSSON ET AL 2,666,087

MANTLE FOR CONTINUOUS ELECTRODES

Filed July 12, 1952

Fig. 1

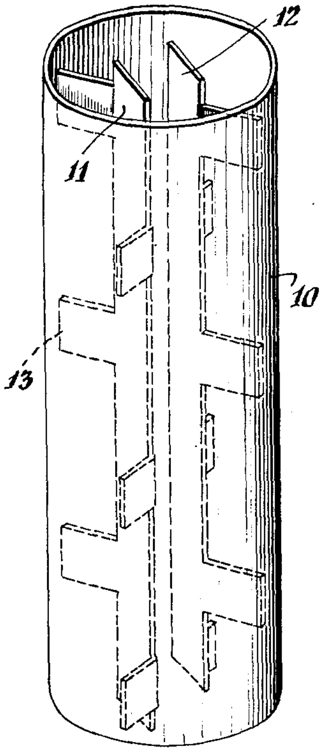

Fig. 3

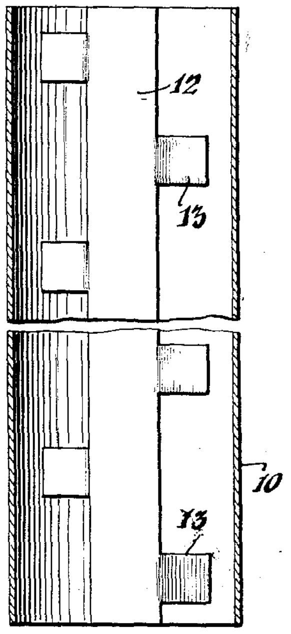

Fig. 5

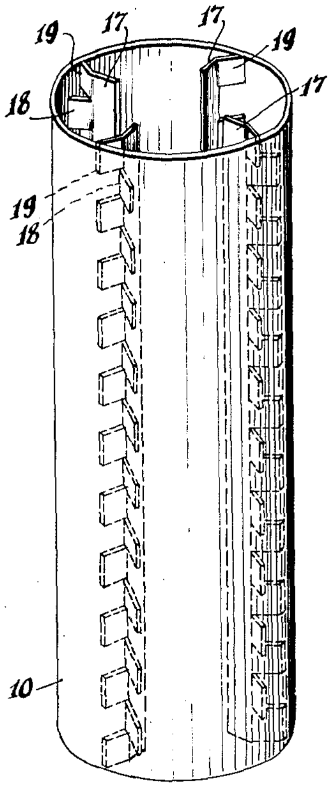

Fig. 2

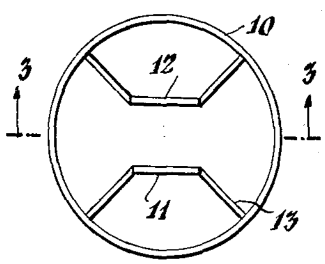

Fig. 4

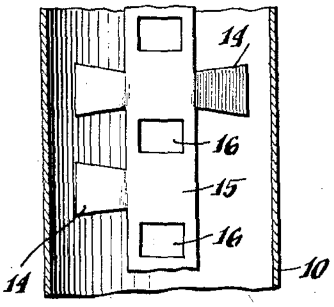

Fig. 6

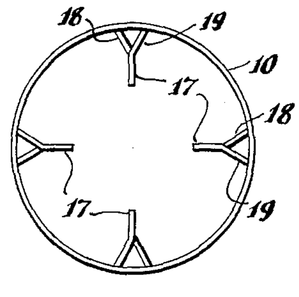

INVENTORS
Folke Carl Evald Johansson
Magnus Gustav Georg Tiberg
BY
Eyre Mann & Burrows
ATTORNEY

Patented Jan. 12, 1954 **2,666,087**

UNITED STATES PATENT OFFICE

2,666,087

MANTLE FOR CONTINUOUS ELECTRODES

Folke Carl Evald Johansson, Borlange, and Magnus Gustav Georg Tiberg, Hallefors, Sweden, assignors to Elektrokemisk A/S, Oslo, Norway, a corporation of Norway

Application July 12, 1952, Serial No. 298,536

Claims priority, application Sweden January 3, 1949

5 Claims. (Cl. 13—18)

This invention relates to continuous self-baking electrodes of the Soederberg type which are subjected to heavy mechanical strains as, for example, the relatively long electrodes used in closed furnaces or the electrodes used in steel furnaces and the like. The electrodes to which this invention relates are ordinarily used for furnaces in which high temperatures are developed as distinguished from low voltage electrodes used for electrolysis as, for example, in aluminum furnaces.

From the time of the first invention of the Soederberg electrode (see for example United States Patent No. 1,441,037 of January 2, 1923), it has been customary with electrodes of the type to which this invention relates to employ an outside casing or mantle for the electrode and at a very early date it was suggested that internal ribs be provided on such mantle to assist in carrying the electrical charge into the mass. The so-called electrode paste is introduced into the mantle where it is either packed in place or it is made of such consistency that when heated it will compact of itself without the necessity for tamping. The present invention relates to improvements on this type of electrode.

The constructions heretofore employed offered certain difficulties due to the fact that the iron ribs projecting in from the mantle, melt in the lower part of the electrode and leave continuous slots dividing the peripheral portion of the electrode into segments. It has also been noted that after the iron ribs melt away, corroding gases or flames go up through the residual slots and tend to enlarge them. Because of these factors the cross-section of the electrode is weakened and breakage may occur.

Another difficulty with the use of ribs as heretofore employed is that the iron has a much greater coefficient of elongation under heat than the baked electrode and this may cause cracking of the electrode. It has not been found feasible to do away with these ribs as they are needed to anchor the electrode mass to the casing to prevent slippage and also in order to introduce the electrical current into the mass.

According to the present invention we solve this difficulty by providing within the mantle and spaced away from it one or more thin plates or sheets which are intended to conduct current vertically through the electrode mass. Of course, some provision must be made for transmitting the electric current to these plates, and it is a feature of our invention that we transmit the current from the outside mantle to the internal plates by

projections which are discontinuous in a vertical line but in the aggregate have a line of connection with the mantle which is at least equal to 30% and preferably to about 50% of the vertical length of the particular strip involved. To do this each strip has projections on one of both sides so that the projections are staggered, that is, one projection does not come directly below the next one above it but there is a gap between any two projections in a vertical line. We have found that this special arrangement gives very advantageous results in providing conductors which when they melt out do not form radial cracks running vertically in from the mantle for continuous lengths, and at the same time a conductive area is provided great enough for conducting the necessary current to bake the electrode mass within the mantle. Where the electrode body is a substantially continuous mass of material entirely filling a relatively thin mantle, if the central plates have a line of connection to the outer mantle less than about 30% of the vertical length of the plate, either the amount of electricity transmitted into the center of the electrode will not be great enough to bake the solid mass, or if the arrangements are such that a heavy load is transmitted toward the interior of the electrode the side connections may be burned out prematurely.

We have also found it advantageous to keep the conductors removed from the actual central portion of the electrode, as having metal down the center seems to unduly weaken the structure. For this reason we prefer to supply two or more plates each with a double row of staggered connections running to the outside mantle and with the plates preferably arranged symmetrically relative to the center of the electrode but not actually lying in such center.

The plate members themselves may be made continuous or they may be provided with openings through them at spaced intervals so that the electrode paste can close together through these openings. As an alternative other projections can be bent out from the central portions of the plates which will provide both for such holes and for additional contacts with the electrode mass. These plates usually will be of the same metal as the mantle or casing.

As regards the shape of the projections that connect the central plate-like members with the mantle, ordinarily they will be made rectangular. If they are made of irregular shape, we have found it somewhat advantageous to have the larger dimensions adjacent the mantle, as this makes for an efficient transfer of electrical power, that is, the larger area comes at the place where a formed connection has to be made.

Our invention may be readily understood by reference to the accompanying drawings in which Fig. 1 shows an electrode casing in perspective with the plates arranged on the inside; Fig. 2 shows a plan view of the same; Fig. 3 is a vertical section of the electrode along the line 3—3 of Fig. 2; Fig. 4 is likewise a vertical section through the electrode with flanges of slightly modified shape and with perforations in the plates; Fig. 5 is a perspective view similar to Fig. 1 but in this case the projections from the plates are extending from one edge instead of both edges and four plates are supplied which are arranged radially of the electrode and Fig. 6 is a plan view of the electrode of Fig. 5.

In these drawings the electrode consists of a sheet metal mantle 10 which is here shown of cylindrical shape into which the raw electrode mass is introduced. In Figs. 1 and 2 two plate members are supplied in the form of parallel bands 11 and 12 which extend in the longitudinal direction of the electrode within the cylindrical mantle 10. In these figures the connecting projections run from both edges of these plate-like members and are here designated by the numeral 13. It will be noted that in this figure the projections are spaced apart a distance equal to approximately three times the height of a projection so that in any vertical row the projections only take up about 25% of the height. However, staggered alternate projections extend from the other edge of each plate which are of the same shape as the projections first described so that the aggregate height of the projections in the two lines is equal to approximately 50% of the height of the plate 11 to which they are connected. In this case, as shown in Fig. 2, the plates 11 and 12 are arranged symmetrically relative to the center of the electrode but do not cross the center and the projections 13 are bent so that in the plan view they form radial lines spaced approximately 90° apart.

In Fig. 4 the projections 14 are made with a greater vertical dimension on the edge toward the mantle in order that the heating of the mantle at the welded seam shall not be too high. Also in Fig. 4 we show the plate member 15 (corresponding to members 11 and 12) as formed with holes 16 through it.

In Fig. 5 the mantle 10 is supplied with four separate plates 17 which are arranged radially and spaced at an angle of 90° from each other. Extending from a single edge of each plate 17 are two rows of projections 18 and 19 which are bent in alternate directions relative to the plate 17 so that in the plan view (Fig. 6) each of these plates with its projections forms a Y. It will be noted that in this case the aggregate line of contact between the projections and the mantle is substantially equal to 100% of the height of the plate but at the same time there is no vertical continuity in the projections directly adjacent to the mantle to form radial lines of weakness.

This application is a continuation-in-part of our earlier application, Serial No. 135,452, filed December 28, 1949.

What we claim is:

1. In a continuous electrode of the type described, the combination of a sheet metal mantle forming the outside of the electrode, electrode paste within such mantle and contacting the same, a plate-like metallic member within the mantle embedded within the paste, spaced projections connecting such member with the mantle along two spaced vertical lines, with the projections making contact along one of said lines being staggered relative to the projections making contact along the other of said lines and the aggregate of such lines of contact of said projections with the mantle equalling at least 30% of the length of the plate-like member with which they are connected.

2. A structure as specified in claim 1 in which the aggregate line of contact of said projections equals at least approximately 50% of the length of the plate-like member with which such projections are connected.

3. A structure as specified in claim 1 which includes a plurality of such plate-like members arranged substantially symmetrically within the mantle but no one of which lies directly within the center of the mantle.

4. In a continuous electrode of the type described, the combination of a sheet metal mantle forming an open-ended tube, continuous electrode paste in the tube directly contacting the interior of the tube so that the electric current transmitted to the mantle will be transmitted directly to the outer portion of the electrode mass, a plurality of plate-like members within the mantle extending substantially the length of the mantle embedded in the electrode mass and thin projections connecting each such member directly to the mantle at widely spaced points but with the lines along which contact of the projections from each of said members are connected to the mantle having an aggregate length equal to at least 30% of the length of such member so that electric current transmitted to the mantle will also be transmitted through the interior of the electrode mass without such mass being weakened by vertically continuous radial flanges extending inwardly from the mantle.

5. In a continuous electrode of the type described, the combination of a sheet metal mantle forming the outside of the electrode, electrode paste within such mantle, a plate-like metallic member within the mantle embedded within the paste, spaced projections connecting such member with the mantle along two spaced vertical lines, with the projections making contact along one of said lines being staggered relative to the projections making contact along the other of said lines, said projections making a larger line of contact with the mantle than with such plate-like member.

FOLKE CARL EVALD JOHANSSON.
MAGNUS GUSTAV GEORG TIBERG.

References Cited in the file of this patent

UNITED STATES PATENTS

Number	Name	Date
1,440,724	Soderberg	Jan. 2, 1923
1,613,212	Westly	Jan. 4, 1927
1,774,674	Sem	Sept. 2, 1930

FOREIGN PATENTS

Number	Country	Date
59,471	Norway	June 13, 1938
132,133	Sweden	Apr. 12, 1951
137,811	Great Britain	Mar. 11, 1920
529,118	Germany	July 10, 1931
805,898	Germany	June 4, 1951

June 1, 1954

J. O. GRAYBEAL

2,680,142

ELECTRIC FURNACE WITH HORIZONTALLY ROTATING
CONSUMABLE ELECTRODE AND METHOD AND
MEANS FOR REPLENISHING THE SAME

Filed Sept. 13, 1951

2 Sheets-Sheet 1

FIG. 1.

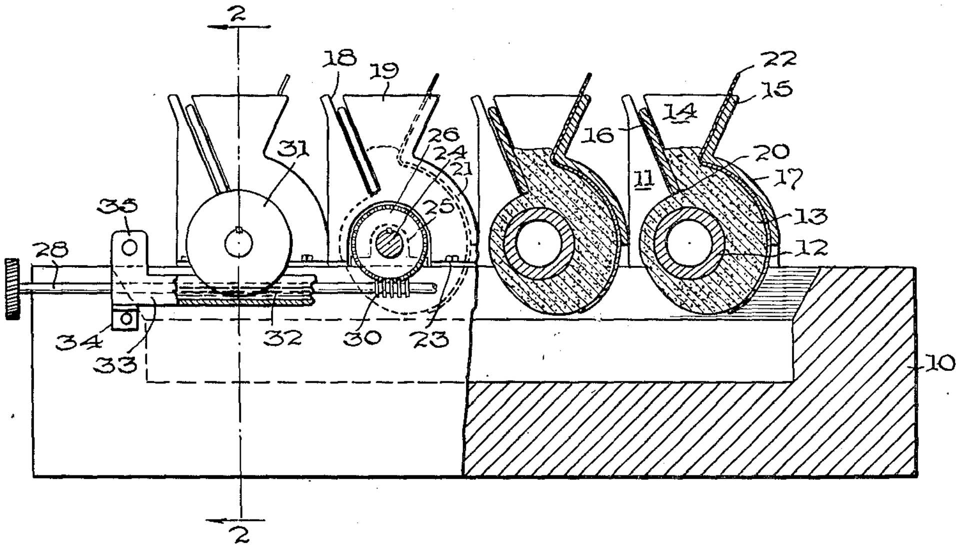

FIG. 2.

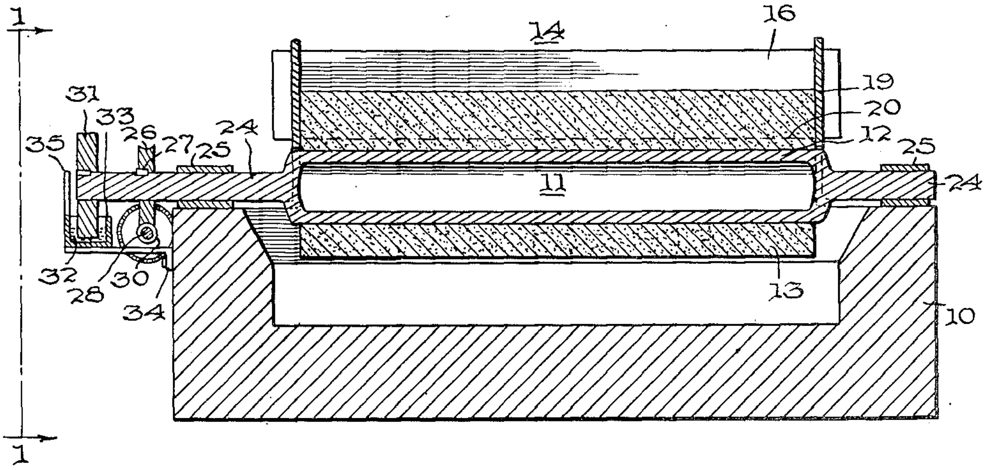

INVENTOR.
JOHN O. GRAYBEAL
BY
James E. Toomey
ATTORNEY

June 1, 1954 **J. O. GRAYBEAL** **2,680,142**

ELECTRIC FURNACE WITH HORIZONTALLY ROTATING
CONSUMABLE ELECTRODE AND METHOD AND
MEANS FOR REPLENISHING THE SAME

Filed Sept. 13, 1951 2 Sheets-Sheet 2

FIG. 3.

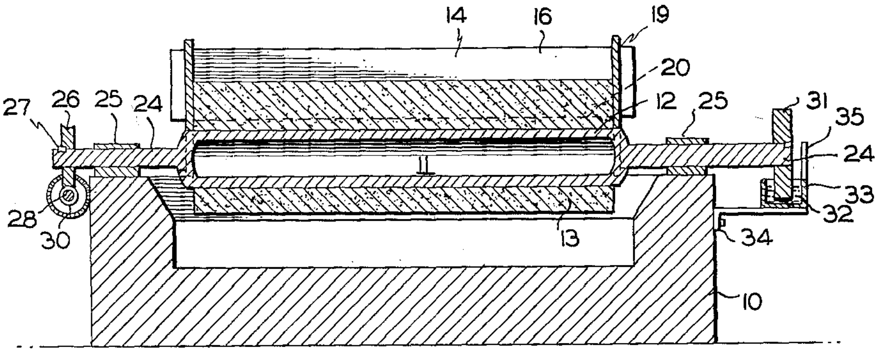

FIG. 4.

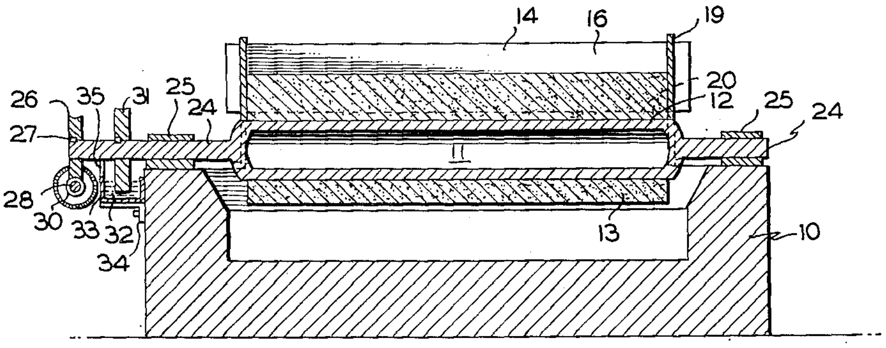

INVENTOR
JOHN O. GRAYBEAL

BY James E. Toomey
ATTORNEY

Patented June 1, 1954

2,680,142

UNITED STATES PATENT OFFICE

2,680,142

ELECTRIC FURNACE WITH HORIZONTALLY ROTATING CONSUMABLE ELECTRODE AND METHOD AND MEANS FOR REPLENISHING THE SAME

John O. Graybeal, Buckley, Wash., assignor to Kaiser Aluminum & Chemical Corporation, Oakland, Calif., a corporation of Delaware

Application September 13, 1951, Serial No. 246,431

26 Claims. (Cl. 13—18)

This invention relates to the electric furnaces employing electrodes of the continuous or self-baking type, and more particularly relates to improved continuous or self-baking electrodes employed in electric furnaces.

Heretofore, continuous electrodes employed in electric furnaces have been of circular or oblong configuration and arranged so that the lower baked portion of the electrodes acts as an anode for conducting current from the furnace bath by connection to the electrode of suitable contact means, such as contact studs inserted into the baked electrode mass or conductor plates contacting the electrode mass. As the lower surface of the electrode is consumed, the electrode mass is vertically lowered toward the furnace bath and the consumed portion of the electrode is made up by placement of carbon paste in the upper portion of the continuous electrode, which carbon paste in turn becomes baked during operation of the furnace. According to such prior practice, complex suspension means were required to support the electrode, and in the preferred practice, where contact studs were inserted in the electrode mass, it became necessary to periodically remove the contact studs and replace them at an upper position involving considerable expenditure of time and effort.

It is an object of this invention to present an improved arrangement of continuous or self-baking electrodes employed in electric furnaces.

It is a further object of this invention to present an improved type of continuous or self-baking electrode which eliminates the necessity for insertion and removal of the electrical contact studs in the electrode mass.

It is a still further object of this invention to present an improved type of continuous or self-baking electrode wherein new electrode surfaces are presented to the furnace bath by rotation of the electrode about a horizontal axis.

It has been found that the electrode mass constituting a continuous or self-baking electrode may be baked about a rotatable conductor and that the portions of the electrode mass which are consumed during operation of the furnace may be replaced by applying carbon paste to the surface of such an electrode which has become partially consumed during operation of the furnace and confining the coated paste so applied to the consumed surface for a time sufficient to allow heat from the conductor to bake the paste. After the new layer of paste has become baked, it may be reintroduced to the electric furnace bath and such surface of the electrode may again

perform the function of carbon anode for further operation of the furnace.

In order to illustrate specific examples of this invention, reference is made to the accompanying drawings which are schematic in character and partly in section, with various details of the furnace which are known to the art omitted for the sake of clarity of illustration.

Figure 1 is a side elevational view of a portion of an electric furnace utilizing continuous electrodes of an exemplary form as contemplated by the present invention. The view of Figure 1 is taken generally along line **1—1** of Figure 2 with various parts shown in section.

Figure 2 is a sectional view along line **2—2** of Figure 1 showing the various details of a rotatable continuous electrode as contemplated by the present invention.

Figure 3 is an end elevational cross-section view of an electric furnace utilizing a rotatable continuous electrode, wherein the drive means and the conductor means associated with said rotatable continuous electrode are arranged on the opposite sides of the furnace.

Figure 4 is an end elevational cross-section view of an electric furnace utilizing a rotatable continuous electrode, wherein the conductor means is located adjacent the furnace pot and the drive means located exteriorly thereof.

Referring to the figures, the furnace pot **10** has disposed thereover a plurality of rotatable continuous electrode units **11**, each unit being made up of a rotatable metal conductor **12** having the carbon electrode mass **13** baked thereto. The carbon paste which forms the electrode mass is introduced to a hopper means **14** which is made up of sides **15** and **16**, side **15** being arcuately extending downward the side of the rotatable electrode in the direction of rotation as indicated at **17** so as to form a retaining or mold portion for the electrode paste as it is baked. Hopper side **16** is mounted as in guideway **18** positioned in hopper end pieces **19** so as to allow for radial movement of side **16** to in turn allow the lower edge **20** of side **16** to act as a scraper against the consumed surface of the electrode **13** as it is introduced into the hopper feed area. Hopper end pieces **19** are extended as are sides **17** downwardly in the direction of electrode rotation so that a confining and retaining mold section is formed for the end surfaces of the rotatable electrode **13**, as indicated at **21**. In order to obviate any tendency for the portion of the electrode mass **13** being baked in contact with mold portion **17** and adhering thereto and thus prevent rotation of the rotatable electrode, a suitable shield means such as aluminum foil **22** may be introduced between the electrode mass **13** and the mold portion **17**, if desired. The hopper means **14** are securely mounted about the upper portion of the rotatable electrode **13** as by securing the hopper end pieces to the sides of furnace pot **10** as indicated at **23**. The centrally located metal conductor portion **12** of the rotatable electrode **11** is extended to form shafts **24** at the ends of the electrode which shafts **24** are in turn supported on the sides of the furnace pot **10** by bearing surfaces **25**. The respective conductor shafts **24** are rotatably driven intermittently or continuously by suitable gears **26** locked to the shaft **24** as by key means **27** or as by welding. Gears **26** may be individually driven or may be ganged to a common drive shaft **28** mounting worm gears **30**.

Electric contact is made to the metal conductor **12** through shaft **24** by means of a contact disc **31**, the periphery of which is immersed in an electric current conductive liquid **32**, such as molten metal which is retained in conductive position as by a container **33** attached to the side of the furnace pot at **34**. A suitable connection means **35** is provided for connecting the container **33** to the furnace source of power.

It will be apparent that various modifications and changes of the illustrated form of the invention are possible. For example, although metal conductor **12** is illustrated as being hollow, it is obvious that the conductor construction could be solid as well, depending upon considerations of weight, strength and conductive surface presented. Moreover, the surface of the conductor **12** on which the electrode mass **13** is baked may be roughened or otherwise made irregular in order to promote adherence of the baked electrode mass thereto, if necessary.

It will be further apparent that the arrangement of rotatable continuous electrodes illustrated is susceptible of utilization in furnaces of considerable horizontal dimensions. For example, it is contemplated that a furnace such as is illustrated could be elongated to accommodate a large number, for example, 40 or 50 horizontally arranged rotatable continuous electrodes. In such a furnace utilizing a large number of rotatable continuous electrodes, the electrodes could be arranged parallel to each other or could be arranged radially around the center of an annular furnace pot.

Although as shown in Figure 1 the hopper means **14** is arranged to feed vertically downward to the consumed surface of the rotatable continuous electrode, it will be apparent that the hopper could be arranged further to the right as illustrated in Figure 1, so as to overcome any tendency for the newly introduced electrode paste to flow counter to the direction of electrode rotation, if desired.

It is further contemplated that more or less electrode paste may be introduced to hopper **14** than is shown in Figure 1. Due to the relatively close position of the paste introduced to hopper **14** to the hot conductor **12**, in certain instances there may be a tendency for the electrode paste extending radially beyond the mold section **17** to bake and thus impede further rotation of the electrode. In such event, a lesser amount of paste introduction so as to eliminate the radial protuberance of paste in the hopper area would be necessary. It is also contemplated that where it it necessary to increase or decrease the thickness of the layer of electrode paste deposited, the side portion **15** and integral mold portion **17** of hopper **14** may be made separable from and adjustable with the end portions **19**, **19** such that portions **15**, **17** may be moved outwardly or inwardly with respect to the electrode **11**. However, if the baking action is relatively slower, the amount of paste fed to the hopper would be correspondingly less critical so that a larger amount of electrode paste could be maintained in the hopper without adverse effect. With further regard to rotation of the rotatable continuous electrode, it will be obvious that the direction of rotation could be reversed by a reversal of parts of the hopper and mold portions of the electrode unit.

In normal operation of a furnace embodying the present invention, any tendency for one consumable electrode to be consumed faster than the others would be compensated for by virtue of the fact that the decrease in distance of the relatively unconsumed electrodes or portions of electrodes and the melt in the furnace would operate to increase the current density for the relatively unconsumed sections and increase the rate of electrode consumption in such section. Accordingly, during normal operation there is no necessity for individual vertical adjustment of the respective electrode units. However, it will be obvious that such vertical adjustment, either for all the electrodes as a unit or for each electrode individually, may be incorporated in the disclosed arrangement, if desired.

As illustrated in Figures 1 and 2 the drive assembly for rotating the respective continuous electrodes is situated between and on the same end as the contact disc means of the electrode. It will be apparent that the drive means and the contact disc or other similar conductor means may be arranged on the shaft of the conductor on opposite sides of the furnace, as illustrated in Figure 3, or may be arranged so as to place the liquid mass **33** adjacent the furnace pot **10** with the rotating drive placed exterior thereof, as illustrated in Figure 4. An arrangement whereby the conductive liquid is placed adjacent the furnace, as illustrated in Figure 4, is particularly advantageous when the conductive liquid is a metal of melting point sufficiently above normal temperature so that additional heat is required to maintain the conducting metal in molten condition, the conductive metal by such arrangement then absorbing the necessary heat from the furnace itself.

Conductive liquids which may be employed to deliver current to the respective contact disc may be mercury, Wood's metal, lead, zinc, or any other metal alloy or solution which is liquid at operating temperatures and which is not destroyed during the process of current conduction.

Although the preferred form of the invention adopts a liquid conductive means between the stationary conductor input and the rotary conductor **12**, it will be apparent that other types of conductors may be utilized. For example, current conduction to the rotary conductor **12** may be through the rotational drive by use of current conducting greases and bearing members supported on the frame structure of the furnace, or by any other suitable means, the use of which makes possible the delivery of the high amounts of current necessary to the rotary conductor **12** with a minimum of power loss.

The various features and arrangements of rotatable continuous electrodes and means for conducting current thereto herein disclosed may be embodied in electric furnaces for use in electrolytic production of aluminum from alumina and for use in other general smelting operations, the making of steel, the production of calcium carbide, and other similar fields of applications wherein furnaces utilizing self-baking electrodes are employed.

What I claim is:

1. An electrode of the self-baking type comprising a substantially horizontally disposed, elongated, current carrying, rotatable, metallic core member which is surrounded with a layer of non-metallic, consumable electrode material, said layer having an upper unbaked portion and a lower baked portion, and wherein said upper unbaked portion and said lower baked portion are coextensive over the longitudinal extent of said layer.

2. An electrode of the self-baking type having a lower baked portion and an upper unbaked portion, comprising a substantially horizontally disposed, elongated, metallic core member which is surrounded with a layer of non-metallic, conductive electrode material, the inner section of said layer being baked onto said core member throughout substantially its entire periphery while the outer section of said layer on the lower portion of the core member is baked on the inner section and the outer section of the upper portion of the layer is in unbaked condition and is attached to the inner section by cohesion.

3. An electrode of the self-baking type having a lower baked portion and an upper unbaked portion, comprising a horizontally disposed, elongated, rotatable, metallic core member, said core member being covered with a layer of nonmetallic electrode material, said layer being entirely in the baked condition on the lower portion of said core member while only the inner section of the layer on the upper portion of said core member is in the baked condition.

4. An electrode of the self-baking type, comprising a substantially horizontally disposed, rotatable, elongated, current-carrying core member which is provided with a layer of nonmetallic, consumable, electrode material surrounding said core member, said layer comprising an upper unbaked portion and a lower baked portion, said lower baked portion of said layer to be progressively fed into contact with a furnace bath by rotation of said core member whereby a substantial portion of that part of the baked layer in contact with the furnace bath is consumed.

5. An electrode of the self-baking type comprising a substantially horizontally disposed, elongated, rotatable, current-carrying core member provided with a layer of consumable electrode material surrounding said core member, said layer comprising a lower baked portion to be fed into contact with a furnace bath by rotation of said core member and therein be substantially consumed and an upper unbaked portion to be baked onto said core member as the member is rotated.

6. An electrode as in claim 5 wherein said core member is provided with a rough exterior surface to enhance the attachment of said unbaked electrode material thereto as it is progressively baked.

7. An electrode as in claim 5 wherein said core member is provided with a hollow central portion and the layer of electrode material is co-extensive therewith.

8. An electrode of the self-baking type comprising a substantially cylindrical, rotatable, current-carrying, substantially horizontally disposed, metallic core member for rotation in a horizontal plane above a furnace bath, said member being provided with a layer of consumable electrode material covering the major portion of its length, said layer comprising a lower baked portion to be fed into the furnace bath by rotation of said core member and therein substantially consumed and an upper unbaked portion to be progressively applied to the electrode to replenish that portion of the layer which is progressively consumed in the furnace bath during rotation of said core member.

9. An electrode as in claim 8 wherein the consumable layer is composed of carbonaceous material.

10. The combination with an electric furnace of an electrode of the self-baking type comprising a substantially cylindrical, rotatable, metallic core member rotating in a horizontal plane over the furnace bath, and a layer of non-metallic, consumable electrode material covering said member along a major portion of its length, said layer comprising an upper unbaked portion and a lower baked portion, said lower portion being in contact with the furnace bath, means for rotatably positioning said electrode over the furnace bath, means for rotatably positioning said electrode over the furnace bath, means for rotating said electrode, and means for supplying electric current to said core member.

11. The combination according to claim 10 wherein a plurality of such electrodes are arranged in a horizontal plane over a furance bath.

12. The combination as in claim 10 wherein the current supplying means comprises a contact disc member which is secured on one end of the core member, a conductive receptacle containing a current conductive liquid, positioned in such manner that the lower peripheral portion of said disc member is always immersed in said liquid, and means for connecting said receptacle to a suitable source of power.

13. The combination with an electric furnace of an electrode of the self-baking type comprising a substantially cylindrical, rotatable, current-carrying core member rotating in a horizontal plane over a furnace bath, and provided with a layer of consumable electrode material surrounding said core member, said layer comprising a lower baked portion to be progressively fed into contact with the furnace bath and therein be substantially consumed as the core member is rotated and an upper unbaked portion to be baked onto said core member as the member is rotated, means for supporting the electrode at its ends over said furnace bath, means for rotating said core member, and means for connecting one end of said core member to a suitable source of power.

14. The combination according to claim 13 wherein a plurality of such electrodes are arranged in a horizontal plane over the furnace bath.

15. The combination as in claim 13 wherein the metallic core member is hollow in the central portion thereof and has shaft-like projections on each end not covered by consumable electrode material.

16. The combination as in claim 13 and including the provision of a hopper extending above and longitudinally of said electrode to feed

unbaked paste-like electrode material progressively down upon the top of said electrode to replenish that portion of the electrode layer which is consumed in the furnace bath during progressive rotation of said core member.

17. The combination with an electric furnace of an electrode of the self-baking type comprising a substantially cylindrical, rotatable, current-carrying, metallic core member rotating in a horizontal plane over a furnace bath, said member being provided with a layer of consumable electrode material covering the major portion of its length, said layer comprising a lower baked portion to be fed into contact with the furnace bath by rotation of said core member and therein be substantially consumed and an upper unbaked portion to be progressively applied to the electrode to replenish that portion of the baked layer which is progressively consumed in the furnace bath during rotation of said core member, means for supporting the core member over the furnace bath, means for rotating said core member, means for connecting one end of the core member in conductive fashion with a suitable source of power, and hopper means mounted on said furnace and extending above and longitudinally of said electrode to feed unbaked electrode paste material progressively down upon the top of said electrode to replenish that portion of the electrode layer which is progressively consumed in the furnace bath during progressive rotation of said core member, said hopper comprising two longitudinally extending side portions, the lower edge of one side extending downwardly to a point closer to the core member than said other side portion, the lower edge of said other side portion being provided with an arcuate section extending downward about the electrode, and two end portions forming, with said arcuate section, a three-sided mold member for retaining the deposited electrode paste material upon the electrode during the baking thereof.

18. A hopper for feeding electrode paste material down upon an electrode of the self-baking type comprising an elongated, rotatable, metallic core member provided with a layer of electrode material surrounding the central portion of said member, said hopper comprising two spaced longitudinally extending side portions, the lower edge of one of the side portions extending downwardly a greater distance than the other side portion, a longitudinally, downwardly extending arcuate portion secured to the lower edge of said other side portion, said arcuate portion to act as a retainer for electrode paste material, which has been deposited upon the electrode, while said paste is baking, and end portions that at least cover that area defined by the ends of said side portions, said end portions forming with said arcuate portion a three-sided mold for retaining the deposited electrode paste in desired position while it is baking.

19. A hopper as in claim 18 wherein one edge of the end portions is integral with said side portion provided with the downwardly extending arcuate portion and each end portion is provided with a downwardly extending slot for reception of the ends of the other longitudinally extending side portion.

20. A hopper as in claim 18 wherein the longitudinally extending side portions converge toward each other at their lower edges and wherein the lower edge of said end portions have a semicircular recess provided therein to be positioned closely adjacent over a predetermined circumferential portion of the rotatable core member.

21. In the method of replenishing the consumable electrode material on an electrode of the self-baking type comprising a substantially cylindrical, rotatable, current-carrying, metallic core member to be rotated in a horizontal plane over an electric furnace bath and being covered along the major portion of its length between the end portions with a layer of consumable electrode material to be progressively fed into contact with a furnace bath, said layer comprising a lower baked portion and an upper unbaked portion, the steps of progressively rotating the electrode which causes the lower baked portion of the electrode layer to be progressively immersed in the furnace bath wherein the major portion of said layer is consumed, simultaneously therewith progressively depositing unbaked electrode paste material upon the electrode surface that has previously passed through the furnace bath to build the consumable electrode layer back up to its original thickness prior to immersion in the furnace bath, and thereafter progressively baking the deposited unbaked electrode paste before such time that the deposited electrode material is fed into the furnace bath.

22. A method according to claim 21 wherein the unbaked electrode paste is deposited upon the electrode along a relatively narrow longitudinally extending zone on the upper side of said rotating electrode.

23. A method according to claim 21 wherein the progressively deposited electrode paste layer is restrained axially and radially until it has been thoroughly baked onto the rotating supporting member.

24. A method according to claim 21 wherein the rotation of the electrode is one of continuous motion.

25. A method according to claim 21 wherein the rotation of the electrode is one of intermittent motion.

26. The combination with an electric furnace of an electrode of the self-baking type comprising a substantially cylindrical, rotatable, current-carrying core member rotating in a substantially horizontal plane over the furnace bath, and a layer of consumable electrode material surrounding said member, said layer having an upper unbaked portion and a lower baked portion, said lower baked portion being in contact with the furnace bath, means for positioning said electrode above the furnace bath in substantially a horizontal plane, means for rotating said electrode, said means comprising a disk-shaped gear element which is securely fixed to one end of said core member, and a driving element, said driving element being provided on one end with a suitable worm gear for meshing with said disk-shaped gear element and being provided on the other end with means for rotating said driving element from a suitable source of power, and means for conducting current to said core member.

References Cited in the file of this patent

UNITED STATES PATENTS

Number	Name	Date
826,742	Price	July 24, 1906
1,150,021	Favier	Aug. 17, 1915
1,169,384	Dwight	Jan. 25, 1916
1,441,037	Soderberg	Jan. 2, 1923
1,496,232	Klugh	June 3, 1924
1,748,780	Marshall	Feb. 25, 1930
1,944,521	Migvet et al.	Jan. 23, 1934

Sept. 25, 1956 G. J. HORVITZ 2,764,539

CARBON ELECTRODES

Filed Aug. 21, 1952

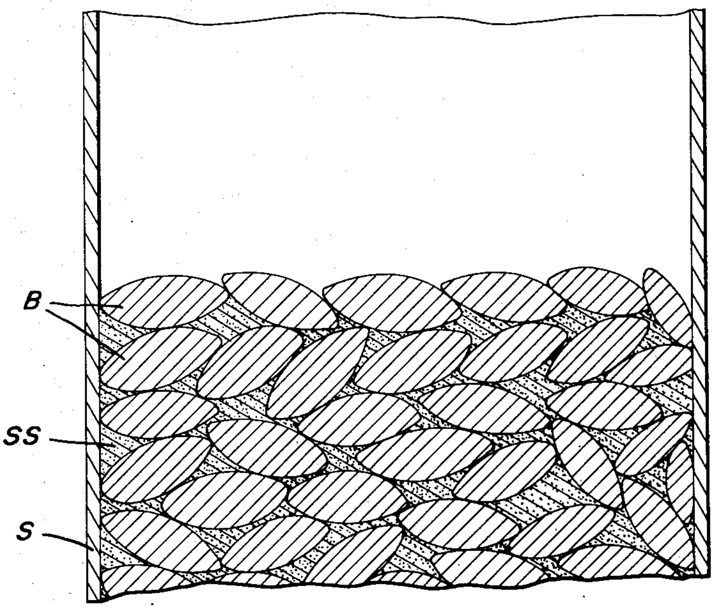

Gerald J. Horvitz
INVENTOR

BY Mock + Blum
ATTORNEYS

2,764,539
Patented Sept. 25, 1956

2,764,539

CARBON ELECTRODES

Gerald J. Horvitz, New York, N. Y., assignor, by mesne assignments, to Frank H. Morse, Gerald J. Horvitz, and Benjamin Sack

Application August 21, 1952, Serial No. 305,700
16 Claims. (Cl. 204—67)

My invention relates particularly to new and improved carbon electrodes; new and improved electrode-forming compositions or mixtures or masses; new and improved hard and crystalline carbon; new and improved carbon briquettes; and new and improved methods for making the same. The invention includes said compositions or mixture or masses, and said crystalline carbon, and said briquettes, irrespective of the method of manufacture. The improved carbon and the improved carbon bodies disclosed herein may be used for any purpose.

This application is a continuation-in-part of my application Serial No. 298,623, filed on July 12, 1952 (now abandoned).

Baked carbon electrodes which are used for electric furnace work and in the electrolytic production of aluminum, consist of body material and a binder. The body material consists substantially of elemental carbon. This body material is exemplified by calcined petroleum coke, other cokes, charcoal, certain types of coal and lampblack. These body materials are classified in the technical literature as having an amorphous carbon structure, although X-ray analysis and other tests show minute crystallites.

The binder is exemplified by petroleum pitch which is a residue of the refining of an asphalt-base petroleum, other pitches, and various tars. Many of these binders consist of elemental carbon and hydrocarbons. Other binders which are disclosed in the technical literature include molasses, resins, turpentine and various products which are produced by distilling organic substances. The binder may consist in whole or in part of one or more organic compounds, without any elemental carbon. These binders usually include volatile material which is largely eliminated by the baking. The residue of the baked carbon binder consists substantially of elemental carbon which bonds the particles of the body material. All these binders are generally designated as carbonaceous binders for the purposes of this disclosure.

As one illustration of the old method, petroleum coke is crushed and calcined, and the resultant carbon body material is ground and this is mixed with the warm binder, which is in the form of small particles. This mixture is cooled, crushed and ground to produce the electrode-forming composition. The ground electrode-forming composition is heated in a mold until it becomes pasty. The mold is then removed from the heating oven, and the material in the mold is subjected to high pressure in said mold. The molded shape is then removed from the mold and is baked in a furnace, with the exclusion of air, in order to remove the volatile matter. Due to the low thermal conductivity of the molded shape, the baking process requires great care, and the finished electrodes are often warped and have low conductivity, and low mechanical strength, due to improper baking. Also, a long baking period of one to two weeks is required, especially if the electrode is of large size. Also, a long cooling period of the furnace is required.

In another type of the old method, the electrode-

forming composition is shaped into cylindrical plugs which are shaped by extrusion. The extruded material is cut into blanks of suitable length, which are baked as above described.

The baking distills, or decomposes or cracks the binder, drives off its more volatile ingredients as gases or vapors, and finally converts the binder into a residue of coke.

The maximum temperature of the furnace is about 1050° C. in a gas-fired furnace.

These old methods have been used for at least fifty years, as evidenced by a text-book entitled "Electric Lighting" by Crocker, published in 1901 by D. Van Nostrand Company.

Instead of using these old pre-baked electrodes, it has also been well-known for many years to feed the initial paste mixture of body material and an unbaked binder into a metal shell, and to use the filled metal shell as an electrode in smelting furnaces to produce ferro-alloys, calicum carbide and other material. The initial paste is baked in said metal shell, in order to provide said metal shell with a filling of baked carbon electrode. This type of electrode is known as the Soderberg electrode or self-baking electrode. The disadvantages which result from the low thermal conductivity and low electrical conductivity of the initial electrode-forming paste are particularly objectionable in the self-baking electrode. The low electrical conductivity results in low electrical efficiency. The electrode-forming paste is not pressed before baking. In order to use the selfbaking electrode in the electrolytic production of aluminum, in an aluminum reduction furnace, it is necessary to drive electrically conductive rods into the soft paste. The self-baked electrode filling also often has a weak and non-uniform mechanical structure, so that it chips and breaks. These disadvantages have been known for many years.

The production of baked carbon electrodes, including the self-baking electrode, and the materials used therein, are described in "Industrial Carbon" by C. L. Mantell, published in 1946 by D. Van Nostrand Company, Inc.

According to one important feature of my invention, I use a body material which has not heretofore been used in making baked carbon electrodes. This body material is designated herein as crude and coarse oil carbon-black. It is made by decomposing or cracking a fraction of petroleum which is preferably an asphalt-base petroleum, or by burning such a fraction with insufficient air for complete combustion. This body material has been well-known for many years, and it has been unsuccessfully attempted to use it in making pre-baked carbon electrodes and in initial electrode-forming compositions which are used for making the self-baked type of carbon electrode.

This crude and coarse oil carbon black has an amorphous structure, and a large particle size for this type of carbon. Thus, the pure and expensive carbon black which is made from natural gas, and which is used in making printing inks, has a particle size of less than 60 millimicrons (0.000060 millimeter). The particle size of lampblack is a maximum of 100 millimicrons. This crude and coarse oil carbon black usually has a particle size of 200 millimicrons to 275 millimicrons. It also has a substantial proportion of volatile matter, which consists substantially of carbon compounds. It also has a blue-black color. As commercially made and sold, it consists of aggregates of its fine particles. These aggregates may have a size of 0.42 millimeter or more. For these reasons, this crude and coarse oil carbon black can not be used in making printing inks, and it has been used as a fuel or as a cheap filler. It may have a particle size up to one micron or more.

According to my invention, I can utilize this amorphous and coarse and crude oil carbon black as a body material, and I heat-convert it to a hard and crystalline carbon which can scratch window glass. In its broader aspect, the invention includes the use of all other carbon body materials, although it is preferred to use said coarse and crude oil carbon black as the only body material, or in a ratio of at least 25% of the body material. Thus, the crude and coarse oil carbon black may be 50% or more of the body material. All ratios and proportions stated herein are by weight, unless otherwise stated.

The invention is further explained in the following example and diagrammatic drawing, to which the invention is not limited. The annexed drawing is a diagrammatic vertical section, partly broken away, of a self-baking electrode which has a metal shell S and a filling in the shell which essentially consists of pre-calcined briquettes B. The briquettes B have intermediate spaces, which are substantially filled with a carbon filler and a binder SS. The briquettes B are substantially in contact with each other and in contact with the shell S, as shown in the drawing.

The body material in this example is said crude and coarse oil carbon black. This has a soft and amorphous carbon structure. It has a particle size of 200 millimicrons to 600 millimicrons. These fine particles are in the form of aggregates of much larger size than said fine particles.

This body material in this example consists substantially of 75% of elemental carbon, 15% of absorbed or adsorbed water, and 9% of volatile matter which consists of carbon compounds.

If the crude and coarse carbon black is made from an asphalt-base petroleum or a fraction thereof, which is highly preferred, these volatile carbon compounds are members of the aromatic or nuclear or closed-chain series or include a large proportion of the carbon compounds of the aromatic or nuclear or closed-chain series.

This coarse and crude and amorphous oil carbon black preferably has a low percentage of sulfur and ash. Preferably, it has not more than 0.75% of sulfur and not more than 0.40% of ash. For certain purposes, it is highly desirable to make an electrode which has a minimum of sulfur and ash, as for use in the electrolytic production of aluminum. Hence, all the materials which are used in the manufacture of the electrode may have a minimum of sulfur and ash, so that the finished electrode will not have more than 0.75% of sulfur and not more than 0.40% of ash, and preferably less.

This crude and coarse oil carbon black is dried at 100° C., in air under normal atmospheric pressure of 760 millimeters of mercury. This drying step removes substantially all of the water, without removing the volatile matter. If any volatile matter is removed, the amount which is removed is negligible.

The dried body material consists substantially of 90.5% of elemental carbon, 9.3% of volatile matter, and small percentages (if any) of sulfur and ash.

The dried body material is now mixed with an unbaked or unset binder. This is preferably a residual pitch of asphalt-base petroleum, as distinguished from pitches and tars which are products of distillation. This pitch which is used in the example softens at 71° C. I can use such residual pitch which has a softening point of 70° C. to 127° C. This pitch has 0.2% to 0.5% of water.

The binder pitch is melted in a tank at a suitable temperature, such as 149° C. to 204° C. This is done in air under said normal pressure. The fused pitch is a pourable liquid at 149° C. to 204° C. The water is thus substantially or wholly eliminated from the pitch.

The dry body material is added to the dry and molten pitch in the tank. The dry body material is in the form of aggregates of its fine particles. The size of such aggregates may be 0.42 millimeter. The dry body material is added slowly in successive small quantities, with vigorous rubbing and stirring to make a uniform mixture and to break up the aggregates as much as possible to fine particle size. The aggregates are rubbed against the wall of the tank or they are otherwise mechanically worked to break up the aggregates. The temperature of the molten pitch and of the mixture is maintained at 149° C. to 204° C., and the final mixture is vigorously worked and rubbed and stirred while said temperature is maintained, in order to break up the aggregates. The fine particles of the body material absorb or adsorb the molten pitch to a maximum extent. The pitch coats said fine particles. Little or none of the original volatile matter of the body material may be driven off during this mixing step.

It is highly preferred to retain said original volatile matter of the body material or at least a major proportion thereof in the mixture. However, the broader aspect of the invention is not limited to this feature. The final mixture is substantially free from water. One of the important features of the invention is to break up the aggregates of the body material into ultimate fine particle size, and to cause said very fine particles to absorb or adsorb a maximum of binder, and to coat the very fine particles with the binder, thus separating the very fine particles by the binder coatings.

Another important feature is to bake or calcine this body material after it has been formed with a binder into a briquette of high density, which is optionally and preferably of maximum density, instead of calcining this body material in loose powder form, in which it is free from binder.

Another important feature is to bake or calcine this body material after it has absorbed or adsorbed a maximum amount of the binder and while its very fine particles are separated by their individual binder coatings.

The final mixture is used for making bonded briquettes or bonded aggregates.

As one illustration, the briquette-forming mixture has substantially the following composition:

	Per cent
Elemental carbon of the coarse and crude oil black	80
Volatile matter of said body material	8
Binder	12

As above noted, there may also be small percentages of sulfur and ash.

In such case, the final briquette-forming mixture is a powdery mass at 149° C. to 204° C. When this mixture is cooled to a briquetting temperature of 93° C. or to 20° C.–25° C., it remains a powdery mass, which can be briquetted without using additional binder. The binder in this briquette-forming mixture is unbaked.

As another illustration, and disregarding the small percentages of sulfur and ash which may be present, the composition of the briquette-forming mixture may be substantially as follows:

	Per cent
Elemental carbon of the coarse and crude oil black	77
Volatile matter of said body material	7.7
Binder	15.0

In such case, the final briquette-forming mixture is a paste at 149° C. to 204° C., and when cooled to 93° C. and to 25° C. The separated fine particles of the elemental carbon also adsorb or absorb a maximum of the binder and are also coated by the binder. There is an excess of binder in this composition, which produces its paste structure, which is the preferred structure. This paste can be briquetted in paste form without adding additional binder, or it may be cooled and ground to form pasty particles whose size is 0.42 millimeter. These pasty particles can be briquetted without using additional binder.

The briquette-forming mixture is briquetted under suitable pressure, to produce a dense and uniform unbaked briquette or bonded aggregate. The briquetting temperature may be 93° C. At this temperature, the briquetting pressure may be 15,000 pounds per square inch, or about 1050 kilograms per square centimeter. Higher or lower pressures may be used at this briquetting temperature, or at any other selected briquetting temperature.

The briquetting temperature may be 20° C.–25° C., in which case the briquetting pressure is increased above 15,000 pounds per square inch. It is preferred in many cases to make unbaked briquettes or unbaked bonded aggregates of maximum density. For some purposes, less than maximum density is preferred.

These unbaked briquettes are now baked, in the absence of air, in a suitable furnace or oven. A gas-fired oven or furnace is preferred. The original volatile matter of the body material and the binder are thus baked. The baking evolves gases or vapors which are driven off. The baking also produces a coked or cracked or calcined residue of said original volatile material, and a coked or cracked or calcined residue of the binder. These residues consist substantially of elemental carbon. In this illustration, the weight of the residue of the baked binder is substantially 34% of the original weight of the unbaked binder, or of the binder in the unbaked briquette.

Although the briquettes are heated in a continuous baking procedure, such heating procedure may be divided in a gas-fired oven into four general stages as follows, in which the temperature is the temperature to which the briquette is heated:

First stage.— Two hours up to substantially 1093° C.

Second stage.—One additional hour at substantially 1093° C. to 1204° C.

Third stage.—An additional period of 35 minutes at substantially 1204° C. to 1260° C.

Fourth stage.—An additional period of 45 minutes at substantially 1260° C. to 1296° C.

The baking temperature to which the briquette is heated may be at least 1288° C. during the entire period of 45 minutes of this fourth stage.

During this fourth stage, the minimum baking temperature to wihch the briquette is heated may be 1344° C.

The heating of the briquettes to an elevated temperature in this fourth stage, during a sufficient period of time, is an important factor in heat-converting the original amorphous structure of the fine and separated particles of the crude and coarse oil carbon black into a hard and crystalline structure, which can scratch window glass.

A typical baking procedure which is used to bake the briquettes is as follows:

Time in Minutes from Beginning of Heating Period	Temperature of Furnace in Centigrade Scale, Degrees
Zero	Furnace Heating Begins.
10	316.
24	494.
34	594.
66	666.
80	760.
105	910.
120	966.
135	1,027.
155	1,088.
185	1,160.
220	1,216.
230	1,260.
255	1,294.
275	1,296.

At the end of this total baking or heating period of four hours and thirty-five minutes, the heat of the furnace is discontinued, and the briquettes are cooled in the furnace, with the exclusion of air, to 20° C.–25° C.

By thus baking separated small briquettes, whose baked or unbaked weight may be 28 grams or less, I provide uniform baking of said small briquettes, and I produce briquettes of uniform and strong structure. I also greatly lower the baking period and the cooling period which is required to make the finished baked electrode, because I use a large proportion of these pre-baked briquettes in making the finished baked electrode. The briquettes may be separated by sand or other packing material, while they are being baked in the gas-fired furnace.

The hardness of certain materials in the well-known Moh hardness scale is as follows:

Material	Hardness number in the Moh scale
talc	No. 1.
apatite, $(CaF)Ca_4(PO_4)_3$	No. 6.
quartz	No. 7.
diamond	No. 10.

Graphite is even softer than talc in the Moh scale.

The hardness of the crystalline carbon structure of the baked briquettes is at least Moh No. 6, and it is preferably at least Moh No. 7. A hardness of Moh No. 7 is preferred.

A typical analysis of a baked briquette is as follows:

	Percent
Elemental carbon or original body material and residue of volatile matter of said body material and of the binder	98.32
Moisture	0.09
Residual volatile material	0.75
Sulfur	0.64
Ash	0.20

This briquette was made with the use of a briquette-forming mixture of the previously mentioned paste type. Microscopic examination showed that its elemental carbon consisted substantially of particles which had a particle size of 200 millimicrons to 600 millimicrons.

This baked briquette had an apparent specific gravity or apparent density of 1.34, a real specific gravity or real density of 1.96, and a volume resistivity at 20° C.–25° C. of 0.00615 ohm $cm.^3$.

This volume resistivity is the electrical resistance of a cube whose edge has a length of one centimeter.

The maximum volume resistivity of the baked briquette may be 0.008 ohm $cm.^3$.

The difference between the apparent specific gravity and real specific gravity of the briquette is due to the fact that gases or vapors are evolved during the baking, which produce pores in the baked briquette.

The apparent specific gravity of the baked briquette was determined by giving it a thin water-proof coating of paraffin, and weighing the coated briquette under water, which showed that its weight was 1.34 grams per cubic centimeter. This method is described in Thorpe's "Dictionary of Applied Chemistry," vol. VI, published in 1926, at page 305.

The real specific gravity was determined by the method which is generally described in said text-book by Mantell. The baked briquette was ground to a particle size of 0.044 millimeter to 0.074 millimeter. This ground material was dried in air under said standard pressure for one hour at 105° C., and it was then weighed. The dry and ground briquette material was then put into a specific gravity bottle or pycnometer, which has an index mark which indicates a known volume, and the ground briquette material was covered with anhydrous kerosene. This bottle was shaken until the kerosene thoroughly wetted the water-free ground briquette material. The bottle was then subjected to a vacuum, in order to remove all air from the ground briquette material. The bottle was then filled with anhydrous kerosene to the index mark. The bottle and its contents were then heated to 116° C. and were then cooled to 26.7° C., at which the bottle and its contents were weighed. The real specific gravity is calculated by the following formula:

$$\frac{A \times \text{specific gravity of kerosene}}{A+B-C}$$

A is the weight of the ground and dry briquette material, which is multiplied by the specific gravity of the kerosene; B is the weight of the bottle when it is filled only with kerosene to its index mark; C is the final weight of the bottle when it contains the ground and dried and air-free briquette material and a filling of air-free kerosene up to the index mark.

In this briquette, the residue of the volatile matter of the crude and coarse oil carbon black and the residue of the binder are substantially or largely coke or elemental carbon, so that the briquette contains at least 90% of elemental carbon, and much more in this illustration.

In this illustration, the briquette has rather low apparent specific gravity. Also, it has rather low thermal conductivity, because in this example, it is intended to use the baked briquettes to make a pre-baked or self-baked electrode of low thermal conductivity. In some cases, as in an electrode which is used in producing aluminum by electrolyzing a fused bath, low heat conductivity of the electrode is desirable.

However, the apparent specific gravity of the briquette and of the electrode can be increased by using a smaller percentage of said residual petroleum pitch binder, or by using another binder which evolves only a small amount of gases or vapors during the baking. It is well known to use binders which evolve only a small amount of gases or vapors during the baking, when it is desired to make a baked electrode of high apparent specific gravity.

The real density or real specific gravity of the baked briquette is preferably at least 1.80. A preferred range of real specific gravity is 2.02 to 2.08.

Also, the specific resistivity of the baked briquette and the electrode which is made with the use of the briquettes can be lowered from said value of 0.00615 cm.^{3} by selecting the materials and the apparent density, to 0.0055 ohm cm.^{3} or less.

In this illustration, the weight of the baked briquette is about 83% of the weight of the unbaked briquette.

The weight of the unbaked briquette may be 28 grams or less. The preferred range of weight of the unbaked briquettes is in a range of 28 grams to 98 grams. Without limitation as to weight, said weight of the unbaked briquettes may be as high as 140 grams.

The baked briquettes have substantially the same shape as the unbaked briquettes.

All the briquettes which are used in an electrode-forming mass preferably have the same weight, shape and volume.

The shape of the baked briquettes is selected so that when the baked briquettes are assembled in a mass or column in which the briquettes abut each other, there are minimum spaces or voids between the abutting baked briquettes. The baked briquettes may have the familiar pillow-shape, in which they have opposed convex arched walls. Each briquette may have one or more planar surfaces, at which they can abut when the briquettes are assembled in abutting relation in a mass or column.

Preferably, the electrode-forming mass or mixture or composition consists of baked briquettes, carbon filler and a binder for the carbon filler material. This carbon filler is preferably ground baked briquette material, which is made by grinding a sufficient number of said baked briquettes at ordinary room temperature to a particle size of 0.74 millimeter, or less. The carbon filler material thus consists substantially of elemental carbon which has the hard and crystalline carbon structure.

The baked briquettes may comprise at least 40% by both weight and volume of the electrode-forming mass and of the finished baked electrode, preferably at least 50% by both weight and volume, and up to 80–90% by both weight and volume, in the electrode-forming mass and in the finished baked electrode.

The uniformity in structure between the baked briquettes and the carbon filler is an important feature of the invention.

As one illustration, the total filler material between the briquettes may consist of 80% of said ground baked briquette material, and 20% of said residual petroleum pitch.

Hence, as one illustration, the electrode-forming mass may consist of 40 parts of pre-baked briquettes, 48 parts of carbon filler and 12 parts of binder, said proportions being by weight.

As another illustration, the electrode-forming mass may consist of 50 parts of pre-baked briquettes, 40 parts of carbon filler, and 10 parts of binder, said proportions being by weight.

As another illustration, the electrode-forming mass may consist of at least 80 parts of pre-baked briquettes, in which case said mass will have 16 parts of carbon filler and 4 parts of binder, said proportions being by weight.

The proportion of filler material will depend upon the shapes of the briquettes and the volumes of the voids between said briquettes in the electrode-forming mass or composition or mixture. These voids are preferably of individual minimum volume and of total minimum volume.

Also, the proportion of binder in the filler material may be less than 20% of said filler material, thus further reducing the percentage of binder in the electrode-forming mass or mixture or composition.

The ground briquette material and the binder are made into a uniform filler-material mixture, preferably using the same above-mentioned procedure which is used to make the briquette-forming mixture. In this illustration, the filler material is a paste. The filler material may be a powdery mass, as above described. If the filler material is a paste, it may be ground to a particle size of 0.42 millimeter.

In one embodiment, the pre-baked briquettes are mixed with the filler material mixture, in order to make a uniform electrode-forming mass or composition or mixture which is used to make the electrode. Thus, the pre-baked briquettes and the filler material mixture may be separately heated to a temperature of 149° C. to 204° C., and the pre-baked briquettes and the filler material may be mixed in this temperature range in a tank, with optional vigorous mixing, so that the filler-material coats the pre-baked briquettes and fills the spaces between said briquettes. As an alternative, the electrode-forming mixture may be made at a lower temperature, which is at or above the softening temperature of the binder in the filler material, but below the melting point of the filler binder. Also, the mixture may be made at 20° C.–25° C.

If it is desired to make a pre-baked electrode, this electrode-forming mass or composition or mixture is forced into a metal mold under any selected pressure. It is highly preferable to form an electrode-forming mass in said mold in which the pre-baked briquettes abut each other at substantial parts of their peripheries, throughout the entire mass, in order to form a skeleton of abutting pre-baked briquettes, and to embed said pre-baked briquettes in a matrix of the pressed filler material, which fills the spaces between said briquettes. It is also highly preferable to make such an electrode-forming mass in which parts of the peripheries of those pre-baked briquettes which are adjacent the inner wall of said metal mold are exposed at the periphery of the pressed electrode-forming mass, to contact said inner wall at spaced points or areas of said inner wall, substantially along said entire inner wall. By using a ram under suitable pressure, the briquettes can be forced to thus contact with each other in the mold, or to be very close to each other, even if they do not abut each other.

Although the pre-baked briquettes are of low or moderate thermal conductivity in this example, such thermal conductivity is superior to that of the initial paste which has been made according to the old method. Hence, in this preferred assembly, the pre-baked briquettes form a continuous skeleton which transmits the external baking heat throughout the electrode-forming mass, thus producing a mechanical structure of superior uniformity and strength in the final baked electrode, with minimum voids. The baking and cooling period are greatly reduced.

The compressed electrode-forming mass or blank can be baked in the mold, with the exclusion of air, either with or without applied mechanical pressure during the baking. If applied pressure is used during the baking, any selected applied pressure can be used. Some gases or vapors are evolved from the filler binder during the baking, and they are allowed to escape.

The electrode-forming compressed mass may be formed to the desired shape by extrusion or molding under pressure, and the resultant compressed and shaped mass can be baked, with the exclusion of air, without using a mold. In such case, the pre-baked briquettes also preferably form a continuous abutting skeleton, as above described.

The electrode-forming mass is baked in a continuous procedure, which may be divided into stages as follows:

First stage.—2 hours at 316° C. to 1094° C.

Second stage.—One additional hour at 1094° C. to 1204° C.

Third stage.—35 minutes more at 1204° C. to 1260° C.

Fourth stage.—45 minutes more at 1260° C. to 1315° C., with a minimum temperature of 1288° C. during substantially the entire period of this fourth stage. This minimum temperature may be 1344° C. This baking period and the necessary cooling period will depend on the size of the electrode, but the baking period can be greatly reduced over the old method.

As an alternative, the pre-baked briquettes can be assembled in a metal mold in abutting relation, to provide an assembled column or skeleton of short length. The filler material is then pressed into the voids of this skeleton. More pre-baked briquettes are then added to the skeleton, in order to increase the length of the skeleton and more filler material is then pressed into the voids between the added briquettes, in order to fill the voids. By using this procedure, contact between the pre-baked briquettes throughout the final electrode-forming mass is insured; and the voids between the non-abutting parts of the briquettes are filled with a matrix of compressed filler material in which the briquettes are embedded, save where the briquettes contact with each other.

The above methods can be used for filling the metal shell of a self-baking electrode of the Soderberg type with the electrode-forming mass, so that the pre-baked briquettes will form a continuous pre-baked abutting skeleton in said metal shell.

While it is highly preferred to provide a skeleton of pre-baked briquettes which abut each other at parts of their peripheries, the invention also includes an electrode-forming mass in which the pre-baked briquettes do not contact with each other at one or more parts of the electrode-forming mass, or in which the pre-baked briquettes are even spaced from each other throughout said mass. In such case, the pre-baked briquettes are very close to each other at parts of their peripheries. The pre-baked briquettes and the pre-baked carbon filler have a thermal conductivity which is much greater than that of the initial paste which is now used in the old method.

The invention is of particular utility in making a self-baked electrode in the metal shell of a Soderberg electrode, because the original electrical conductivity of the initial electrode-forming mass which is filled into said shell, prior to the baking of the binder in said mass, is much superior to that of the initial paste which is now used in the old method. Also, the heat is conducted directly from the metal shell to the briquettes, which abut said metal shell, and from the pre-baked carbon electrode tip to the briquettes which abut said tip, and said heat is transmitted uniformly to the pre-baked briquettes and the matrix in which they are wholly or partially embedded within said metal shell. Even if the pre-baked briquettes are spaced from each other within said metal shell, a superior electrode-forming mass is formed.

As a much less preferred alternative, unbaked briquettes may be used in every embodiment instead of pre-baked briquettes. In such case, the briquettes are baked simultaneously with the filler material. The unbaked briquettes are also preferably in abutting relation.

Alternative materials

Instead of using the coarse and crude oil carbon black as the body material, which is the greatly preferred body material, I can use other carbon materials which have been and are used in making carbon electrodes, as disclosed in said text-book by Mantell, or other carbon body material. Thus, I can use pre-calcined coke, such as pre-calcined petroleum coke, which has a maximum of 0.5% of volatile matter and little or no water. Other alternative body materials are exemplified by pitch coke, tar coke, retort carbon, graphite, lampblack and carbon black of any type. The selection of these body materials depends upon their cost and the intended use of the finished baked electrode.

The coarse and crude carbon black may be calcined or baked in powder form according to the above-described procedure for baking the briquettes, for use as carbon filler material, or for use in making the briquettes. However, the previously disclosed procedure is greatly preferred. A mixture of coke or other alternative carbon material may be mixed with binder and baked or calcined in powder form as above described, in order to create or improve original crystal structure.

Also, the pre-baked or unbaked briquettes may be mixed only with a binder to form the electrode-forming mass, thus eliminating the carbon filler in said electrode-forming mass. If this is done, it is preferred to use pre-baked briquettes which have small intermediate spaces or voids.

The finished baked electrode preferably has a maximum volume resistivity of 0.008 ohm cm.^{3}, and the above-mentioned small proportions of sulfur and ash, and it preferably consists of at least 85% or 90% of elemental carbon. By using the preferred materials and procedure, the entire finished electrode may consist of fine bonded particles whose size is 200 to 275 millimicrons, or with a maximum particle size of one micron. The finished electrode may thus have said hard and crystalline carbon structure, and it may have substantially the same properties as the pre-baked briquettes. The briquettes are integrally bonded in the finished electrode with the matrix, which consists either of binder residue alone or of binder residue and carbon filler.

I can use the various binders which are disclosed in said text-book by Mantell. The invention also includes any binder which can fulfill the function of the carbonaceous binders disclosed or referred to herein, and any binder which can fulfill such function is included in the disclosure and claims, whenever a carbonaceous binder is mentioned.

However, it is highly preferred to use a petroleum pitch which is a residue of asphalt-base petroleum, in combination with the crude and coarse oil black.

Many changes and omissions and additions and substitutions can be made in the above-mentioned disclosure, without departing from the scope of the invention. The invention is further disclosed and defined in the appended claims.

It is noted that the hard and crystalline structure of the briquettes is a hard and crystalline carbon structure. The briquettes and the finished electrode, in this example, have a very small percentage (if any) of the oxides which form the ash. These oxides are oxides of silicon, iron and other metals. Even if the silicon oxide is converted to quartz during the baking, the percentage of quartz is too small to provide the hard and crystalline structure which is formed herein. Calcined petroleum coke may be abrasive, due to the formation of some silicon carbide in the calcination process, but this is entirely different from the formation of a hard and crystalline carbon structure from carbon which has an original structure which is only slightly abrasive, or which has an original hardness in the Moh scale which is less than No. 6 or No. 7.

Likewise, certain types of carbon black are abrasive, because they contain a substantial proportion of siliceous impurity.

I claim:

1. A combination electrode-forming mass which consists substantially of pre-calcined briquettes and carbon filler and uncalcined carbonaceous binder, the weight of said briquettes being in a range of substantially 23 grams to substantially 116 grams, said briquettes consisting substantially wholly of elemental carbon, the non-carbon ingredients being substantially limited to less than one per cent of sulfur and less than one per cent of ash, said briquettes substantially abutting each other in said mass, said mass having spaces of irregular shape between said briquettes, said spaces being substantially filled with said carbon filled and said binder, said briquettes having a minimum specific gravity of 1.34 and a maximum resistivity of 0.00615 ohm cm.^{3}.

2. A mass according to claim 1 in which said elemental carbon of said briquettes is crystalline and sufficiently hard to scratch window glass.

3. A mass according to claim 1 in which said briquettes have a real specific gravity of substantially 2.02 to 2.08 and a maximum resistivity of 0.0055 ohm cm.^{3}

4. A mass according to claim 1, in which said briquettes are at least substantially 40% by weight of said mass, the elemental carbon of said briquettes is crystalline and sufficiently hard to scratch window glass, said briquettes have a real specific gravity of substantially 2.02 to 2.08 and a maximum resistivity of 0.0055 ohm cm.^{3}.

5. A mass according to claim 4, in which the material of said carbon filler is substantially identical with the material of said briquettes.

6. A mass according to claim 1, in which the material of said carbon filler is substantially identical with the material of said briquettes.

7. A method of making an electrode, which consists in making a mixed mass of pre-calcined briquettes and carbon filler and uncalcined carbonaceous binder, the weight of said briquettes being substantially 23 grams to substantially 116 grams, said briquettes consisting substantially wholly of elemental carbon, said briquettes having a minimum apparent specific gravity of 1.34 and a maximum resistivity of 0.00615 ohm cm.^{3}, enough briquettes being included in said mixed mass to substantially abut each other in said mixed mass, said mixed mass having irregular spaces between said briquettes which are substantially filled by the mixed carbon filler and uncalcined carbonaceous binder, and heating said mixed mass to calcine said binder and to form a baked electrode while maintaining said briquettes in substantially abutting relation.

8. A method according to claim 7, in which the material of said filler is substantially the same as the material of said briquettes.

9. A method according to claim 7, in which the elemental carbon of said briquettes is crystalline and sufficiently hard to scratch window glass.

10. A method according to claim 7, in which said briquettes comprise substantially 40% to 90% by weight of said mixed mass, the elemental carbon of said briquettes is sufficiently hard to scratch window glass, and the non-carbon ingredients of said briquettes are limited to less than one per cent of sulfur and less than one per cent of ash, the real specific gravity of said briquettes is substantially 2.02 to 2.08, and the maximum resistivity of said briquettes is 0.0055 ohm cm.^{3}.

11. A method according to claim 7, in which the material of said carbon filler is substantially the same as the material of said briquettes.

12. A method of making a self-baking electrode in a longitudinal metal shell, which consists in filling said shell with a mixed mass, said mixed mass filling consisting of pre-calcined briquettes and carbon filler and uncalcined carbonaceous binder, the weight of said briquettes being substantially 23 grams to 116 grams, said briquettes being substantially uniformly distributed throughout said filling and consisting substantially wholly of elemental carbon and having a minimum apparent specific gravity of 1.34 and a maximum resistivity of 0.00615 ohm cm.^{3}, enough briquettes being included in said mixed mass filling to substantially abut each other substantially uniformly throughout said mixed mass filling, including the face of said mixed mass filling which is directly adjacent the inner surface of said metal shell, and applying heat to said filling to form a self-baked electrode in said shell, the spaces between said briquettes in said mixed mass filling being irregular and being filled by said filler mixed with said binder.

13. A method according to claim 12 in which the elemental carbon of said briquettes is crystalline and hard enough to scratch window glass, said briquettes have a real specific gravity of substantially 2.02 to substantially 2.08, the maximum resistivity of said briquettes is 0.0055 ohm cm.^{3}, said briquettes comprises substantially 40% to 90% by weight of said mixed mass filling, and the non-carbon ingredients of said briquettes are substantially limited to less than one per cent of sulfur and less than one per cent of ash.

14. A method according to claim 13 in which the material of said carbon filler is substantially the same as the material of said briquettes.

15. A self-baking electrode which has a metal shell and a filling in said shell, said filling consisting substantially of pre-calcined briquettes and carbon filler and uncalcined carbonaceous binder, the weight of said briquettes being in a range of substantially 23 grams to substantially 116 grams, said briquettes consisting substantially of elemental carbon, the non-carbon ingredients of said briquettes being substantially limited to less than one per cent of sulfur and less than one per cent of ash, said briquettes substantially abutting each other in said filling and also substantially abutting the inner face of said metal shell along the periphery of said filling, said filling having spaces of irregular shape between said briquettes, said spaces being substantially filled with said carbon filler and said binder, said briquettes having a minimum specific gravity of 1.34 and a maximum resistivity of 0.00615 ohm cm.^{3}.

16. A self-baking electrode according to claim 15, in which said briquettes are at least 40% by weight of said filling, the elemental carbon of said briquettes is crystalline and sufficiently hard to scratch window glass, said briquettes have a real specific gravity of substantially 2.02 to 2.08 and have a maximum resistivity of 0.0055 ohm cm.^{3}.

References Cited in the file of this patent

UNITED STATES PATENTS

887,123	Price et al.	May 12, 1908
1,067,031	Jewett	July 8, 1913
1,207,694	Pike	Dec. 5, 1916
1,215,700	Pike	Feb. 13, 1917
1,282,475	Sieurin	Oct. 22, 1918
1,501,108	Hamister	July 15, 1924
1,517,819	Beer	Dec. 2, 1924
1,670,052	Soderberg	May 15, 1928
2,148,133	Reuscher et al.	Feb. 21, 1939

(Other references on following page)

UNITED STATES PATENTS

2,282,235	Moberly	May 5, 1942
2,304,351	Goss et al.	Dec. 8, 1942
2,376,760	Elsey	May 22, 1945
2,527,595	Swallen	Oct. 31, 1950
2,600,078	Schutte et al.	June 10, 1952
2,656,309	Brown	Oct. 20, 1953

FOREIGN PATENTS

550,379	Great Britain	Jan. 5, 1943
58,956	Germany	Oct. 10, 1891

OTHER REFERENCES

Mantell: "Industrial Carbon," 2nd ed., pages 79, 80, 193–201, 242. D. Van Nostrand Co., Inc., New York, N. Y.

FIAT Report No. 838, O. T. S. publication PB44659, June 15, 1946, pages 10, 11 and 12.

Oct. 30, 1956 J. O. GRAYBEAL 2,769,113

SELF-BAKING ELECTRODE

Filed Sept. 18, 1951 3 Sheets-Sheet 1

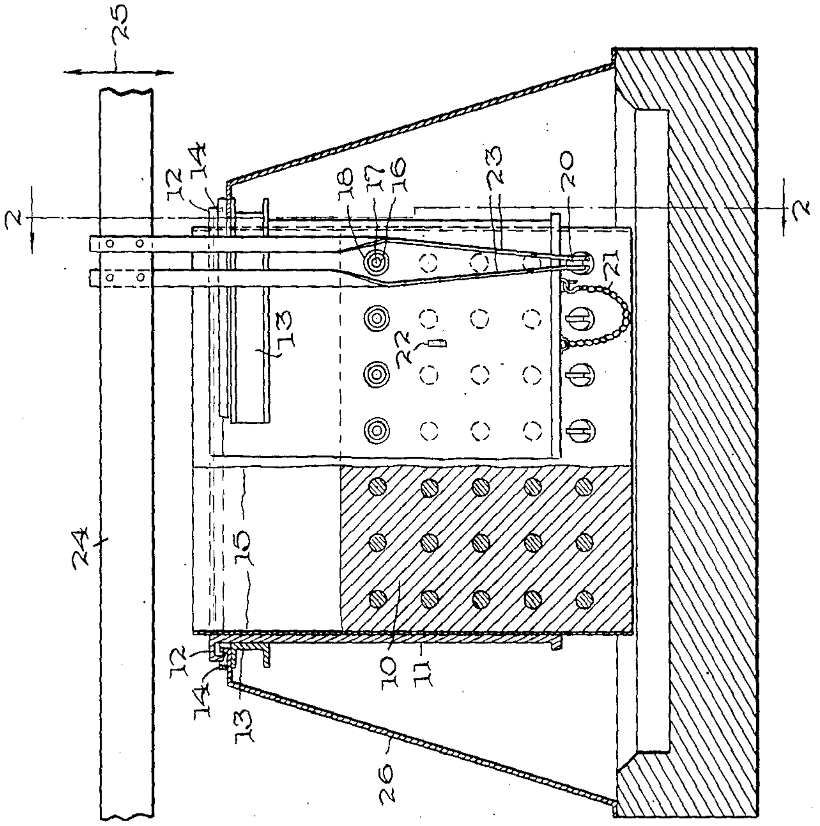

FIG. 1.

INVENTOR.
JOHN O. GRAYBEAL
BY
James E. Toomey
ATTORNEY

Oct. 30, 1956 J. O. GRAYBEAL 2,769,113

SELF-BAKING ELECTRODE

Filed Sept. 18, 1951 3 Sheets-Sheet 2

FIG. 2.

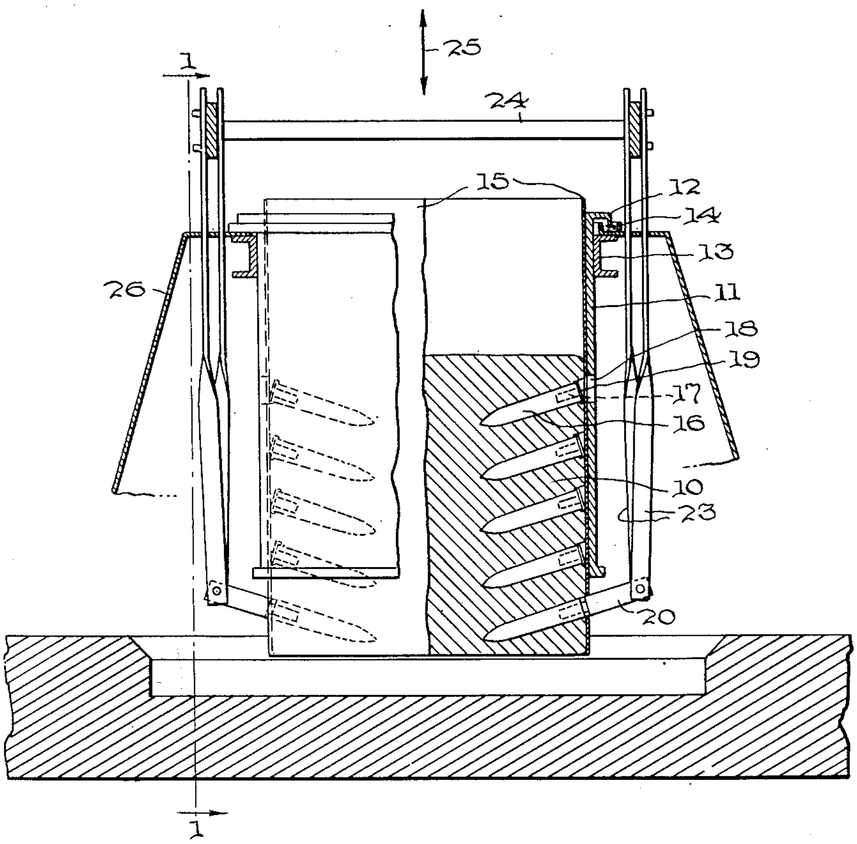

INVENTOR.
JOHN O. GRAYBEAL

BY James E. Toomey

ATTORNEY

Oct. 30, 1956 J. O. GRAYBEAL **2,769,113**

SELF-BAKING ELECTRODE

Filed Sept. 18, 1951 3 Sheets-Sheet 3

FIG. 3.

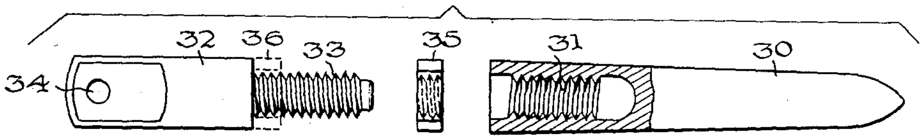

FIG. 4.

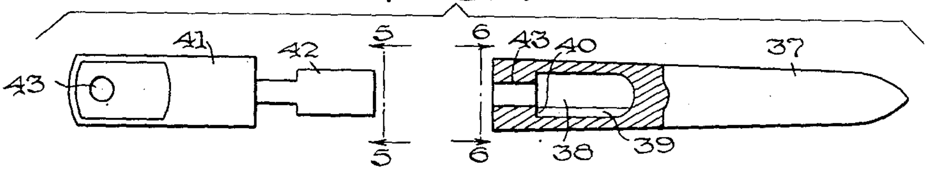

FIG. 5.

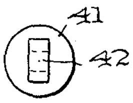

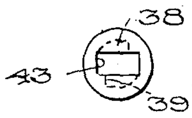

FIG. 6.

FIG. 7.

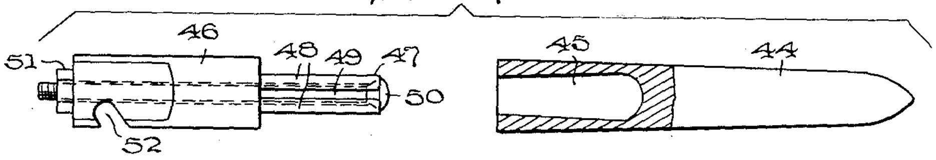

FIG. 8.

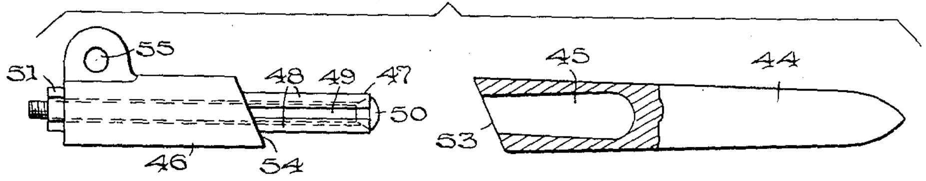

FIG. 9.

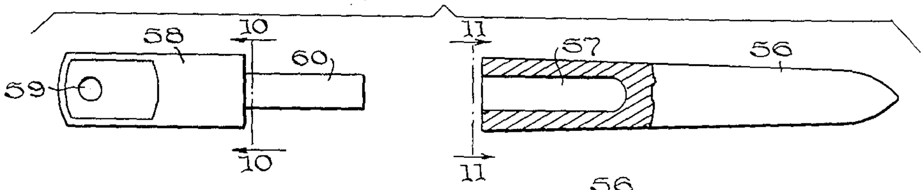

FIG. 10.

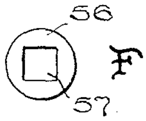

FIG. 11.

INVENTOR.
JOHN O. GRAYBEAL
BY James E. Toomey
ATTORNEY

United States Patent Office

2,769,113

Patented Oct. 30, 1956

2,769,113

SELF-BAKING ELECTRODE

John O. Graybeal, Buckley, Wash., assignor to Kaiser Aluminum & Chemical Corporation, Oakland, Calif., a corporation of Delaware

Application September 18, 1951, Serial No. 247,146

7 Claims. (Cl. 313—327)

This invention relates to electric furnaces employing electrodes of the continuous or self-baking type, and more particularly relates to an improved suspension means for a continuous electrode employed in an electric furnace for use in the electrolytic production of aluminum from alumina.

Heretofore continuous electrodes employed in electric furnaces have been suspended by means of contact plates exerting sufficient pressure on the sides of the electrode to support the weight thereof, and later by means of contact studs inserted into the electrode mass either vertically or horizontally, the contact studs serving the dual function of supporting the electrode by connection of suitable suspension means to the contact studs, and further serving to conduct electrical current to the baked electrode mass. In the so-called horizontal contact stud type of suspension it is necessary to insert the contact stud into the upper portion of the electrode mass which is yet unbaked by the heat of the furnace. According to prior practice, a substantial portion of the stud is left outside the electrode mass so that the necessary connections for subsequent electrode suspension and electrical current conduction may be accomplished. As the lower portion of the electrode is consumed in operation of the furnace, it becomes necessary to successively lower the continuous electrode with its contained protruding contact studs. Accordingly, complex suspension means to allow successive movement of the electrode have been devised, such as the open framework structure formed of alternating beams as disclosed in Torchet Patent No. 2,073,356, which beam structure is constructed to allow successive removal of the lowermost row of alternating beams and for the replacement thereof in superimposed position on the open-frame structure after additional contact studs have been inserted in the unbaked portion of the electrode mass. It has also been proposed to eliminate the open-frame structure and replace the beams by channels contiguously arranged as disclosed in Legeron Patent No. 2,169,563. The contiguous arrangement of such channels as disclosed in said Patent 2,169,563 was made possible by the placement of suitable holes in the channels for insertion of the contact studs therethrough. In the suspension means of both Patent No. 2,073,356 and Patent No. 2,169,563, the electrode is supported through the contact studs which in turn rest on the beam or channel, the beam or channel being in turn suspended from suitable suspension means mounted on the furnace frame. To accomplish the successive lowering of the electrode with either suspension and electrode encompassing means, it is necessary to remove the lowermost row of beams or channels and replace said row in upper position in the frame structure. Another attempt to simplify the suspension means for the so-called horizontal contact stud system is disclosed in Sem Patent No. 2,159,183 wherein a stationary mold or casing is provided for the continuous electrode, the vertical movement of the contact studs being provided for by vertically arranged slots in the stationary casing. Aside from structural weaknesses inherent in such a slotted arrangement, the tendency for the unbaked portion of the electrode to deform and extrude through the slots necessitates the use of a relatively thick inner casing movable with the electrode. Other arrangements known to the art embody a permanent casing for the electrode with a cut-out portion to allow for insertion and movement of the contact studs, such as is disclosed in Hagerup-Larssen, Patent No. 2,339,230, and British Patent No. 608,475. These arrangements, embodying a stationary casing with large cut-out portions, likewise necessitate the employment of a relatively thick movable inner casing to resist extrusion and deformation of the unbaked portion of the electrode.

It is an object of this invention to present an improved arrangement of casing and suspension means for continuous electrodes employed in electric furnaces.

It is a further object of this invention to present improvements in electric contact studs for use with continuous electrodes employed in electric furnaces.

It is a further object of this invention to provide an improved arrangement of electric contact studs in a continuous electrode by use of which the employment of a strong stationary casing and the minimization of deformation and extrusion of the unbaked portion of the continuous electrode are made possible.

It has been found that the electric contact studs utilized in the so-called horizontal suspension system may be sectionalized so as to remove the necessity for a movable beam or channel structure and remove the necessity for employing slotted or large cut-out sections in the stationary casing. Accordingly, the electric contact studs are sectionalized so that the inner end portion which is to be baked in the electrode mass may be inserted at a point sufficiently high in the unbaked portion of the electrode mass so that the lateral pressure of said unbaked portion is relatively small. By such arrangement, the inner section of the electric contact stud being baked in position during downward travel of the electrode is contained wholly within the stationary casing. The stationary casing consequently remains unbroken in areas of its surface where a relatively high lateral pressure of electrode mass is encountered. According to this invention, the stationary casing can remain unbroken along the line of contact stud inner section travel from just below the point of insertion of the contact stud inner section to a point where the electrode is fully baked and the contact stud inner section firmly baked therein. Under operating conditions, downward movement of the electrode mass will cause a row of baked-in stud sections to emerge below the permanent casing a sufficient distance so that the corresponding outer section of the studs may be connected thereto, in turn making it possible to reconnect the bus bars to the new row of studs whereon the lowermost row of studs are removed in the conventional manner.

Aside from the advantages of a stronger stationary casing of simpler construction and the greatly reduced tendency for the electrode mass to deform during operation of an electric furnace self-baking electrode suspension arrangement embodying the present invention, it will be seen that substantial savings in materials necessary for electric contact stud and beam or channel construction are accomplished. The saving in amount of material needed for contact studs arises from the fact that only two rows of outer stud sections per furnace are necessary whereas by the former practice complete studs were required for each row. Where beams or channels have been previously employed, operational advantages in the form of reduced change-over time are realized since the necessity for handling heavy beams or channels is eliminated.

In order to illustrate specific examples of the invention, reference is made to the accompanying drawings which are schematic in character and partly in section, with various details of the furnace which are known to the art omitted for the sake of clarity of illustration.

Figure 1 is a side elevational view of a portion of an electric furnace utilizing a self-baking electrode and embodying an exemplary form of the invention. The view of Figure 1 is taken generally on line **1—1** of Figure 2 with various parts shown in section.

Figure 2 is an end elevational view of the partial furnace construction illustrated in Figure 1, generally along the line **2—2** of Figure 1 with various parts shown in section.

Figure 3 is an expanded side view partially in section of one form of sectional contact stud employed, wherein the connection means between the inner and outer contact stud sections constitute thread means and locking nut therefor.

Figures 4, 5 and 6 illustrate another form of connection means between the inner and outer stud sections wherein the connection means is of the bayonet or key type, Figure 4 being an expanded side view partially in section, Figure 5 being an end view of the outer section connection means, and Figure 6 being an end view of the inner section connection means.

Figure 7 is an expanded side view partially in section of yet another form of sectionalized electric contact stud which may be employed in the practice of this invention. The connection means illustrated in Figure 7 embodies a female portion in the inner stud section and an expandable male portion which is expandable by adjustment from the outer end of the contact stud outer section.

Figure 8 is an expanded side view partially in section of still anaother form of contact stud employing expandable connection means similar to that illustrated in Figure 7, but embodying slanting contact faces on the respective sections so that the face of the inner contact stud section may be flush to the stationary electrode casing when the inner section is imbedded in the electrode mass.

Figures 9, 10 and 11 illustrate an expanded side view partially in section and end views of the respective stud sections of still another form of sectional contact stud which may be employed in the practice of this invention. The connection means illustrated in Figures 9, 10 and 11 contemplates the placement of the inner stud sections in the electrode mass in a substantially horizontal position so that any tendency for the contact stud sections to separate while in operative relation is removed.

Referring again in Figures 1 and 2, the electrode mass **10** is supplied at the top of the electrode and is contained in a stationary casing **11** as the lower portion of the electrode is consumed and the electrode mass **10** is successively lowered. The stationary casing **11** is provided with a flange means **12**, which serves to suspend the stationary casing **11** from the framework **13**, the flange **12** resting on a suitable sandlock **14**. A suitable inner casing **15**, such as aluminum foil, may be provided between the electrode mass and the stationary casing to facilitate freedom of movement therebetween by reducing the tendency for the electrode mass **10** to adhere to the stationary casing **11**. Inner casing **15** may be omitted, however, if desired. Contact stud inner sections **16** which have been provided with suitable connection means **17** are countersunk into the unbaked portion of the electrode mass **10**. This countersunk arrangement may be accomplished by placing the inner sections **16** in position at the top of the electrode mass **10**, thus eliminating the necessity of having any openings whatsoever in the sides of stationary casing **11**, or by inserting the inner sections **16** through suitable apertures **18** provided in the stationary casing **11** at points where the lateral pressure of the unbaked mass is relatively low. During operation of the electric furnace and as the electric contact stud inner sections **16** progress downwardly as a result of movement of the electrode mass **10** and become baked in the electrode mass **10** by heat released in the lower portion of the electrode, the row of contact stud inner sections **16** emerge below the permanent casing **11**. The contact stud inner sections **16** may be advantageously provided with a removable or destructible shielding means **19**, such as an aluminum foil cap, in order to protect the connection means from any tendency of the unbaked portion of the electrode mass **10** to extrude into the connection means **17** while the contact stud inner section **16** is being baked in position. Such shield means may take the form of an aluminum foil cap or an aluminum disc with an upset portion to contact the sides of the female portion of the inner section to lock the shield means in place. Certain types of asphaltic pastes having the property of low volatility at high temperatures are likewise available to shield the connecting portion of the inner section. Similarly a plug portion made from suitable material, such as metal or wood, could be utilized. Moreover, the plug means could embody a sloping face to rest flush with the opposing stationary casing surface in much the same manner as does the sloping face **53** of inner section **44** as illustrated in Figure 8.

When the contact stud inner sections **16** emerge below the permanent casing **11**, the shielding means **19** may be removed or destroyed and contact stud outer sections **20** connected to the contact stud inner sections **16** which have become baked in the electrode mass **10**. During the downward travel of the electrode the lowermost row of contact studs become supported by auxiliary suspension means preferably depending from the stationary casing, such as a plurality of chain means **21**, only one of which is illustrated on Figure 1 for the sake of clarity. When not in use as auxiliary suspension means, the chain means **21** may be removed from the operating area of the furnace, as by securing the free end of the chain means **21** to a suitable holding device mounted on the stationary casing, such as eye **22**. With the lowermost row of contact studs supported by the auxiliary suspension means, the bus bars **23** may be detached from the lowermost row of contact studs and moved to new position adjacent the newly prepared row of studs, as by vertical adjustment of the master bus bar **24** as indicated at **25**. On arrival in new position the bus bars **23** may be connected to the new row of contact studs and the electrode weight retransferred to the main suspension means operating through bus bars **23**. Slight upward movement of the main suspension means will then release the auxiliary suspension means **21** which is then removed from the operating area as by securing the free end of chain means **21** to eye **22** as previously explained, at which time the lowermost row of studs are removed in the usual manner.

The master bus bar **24** and the suspension bus bar **23** are vertically adjustable as indicated at **25** by suitable means such as a jacking system (not shown) similar to that disclosed in connection with Legeron Patent No. 2,169,563. Additional furnace features necessary for efficient operation of the electric furnace, such as hood means **26** and gas collecting and exhausting ducts (not shown), are well known in the art and have been omitted for the purpose of simplicity of illustration.

The connection means necessary between the contact stud inner sections **16** and the contact stud outer sections **20** may be of any suitable type which will impart sufficient strength and electrical conductivity properties to the resulting connection. As an example of a suitable connection means having the requisite strength and electrical properties, Figure 3 illustrates a threaded connection whereby the contact stud intersection **30** is provided with a female thread portion **31** and the contact stud outer section **32** is provided with a threaded male portion **33** and a suitable bus bar connection means **34** which may be in the form of an aperture or projecting bar-like portions. Though not essential, nut **35** may be utilized as at **36** to lock the threaded sections together in any desired relative rotational position to allow the bus bar connecting portion **34** to be in vertical position for connection with bus bars **23** irrespective of the relative rotational position of the contact stud inner section **30**, while at the same time maintaining a pressure contact between the threaded portions **31** and **33** to ensure a good conductive contact through the connection.

Figures 4, 5 and 6 illustrate another form of suitable contact stud connection means wherein inner section **37** is provided with a female bayonet portion **38** which includes a stop ledge **39** and a locking cam surface **40** The outer contact stud section **41** is provided with a bayonet type male section **42**, having a widened end portion and a suitable bus bar connecting portion **43** for connection of the contact stud to bus bars **23**. Figure 5 illustrates an end view of the outer contact stud section **41** shown in Figure 4, showing the widened male end portion **42** of the connection means. Figure 6 illustrates an end view of the contact stud inner section **37** showing the widened hollow portion **43** suitable for insertion of the key portion **42** and showing in dotted line the female bayonet section **38** and stop means **39**. In use this form of connection means will require the placement of the long dimension of opening **43** in horizontal position when the contact stud inner section **37** is countersunk in the electrode mass. Connection is accordingly accomplished by insertion of key portion **42** through aperture **43** followed by rotation of the outer contact stud section **41** through 90° to place the outer contact stud section in lock position and to allow the bus bars **23** to be connected to the outer contact stud section **41** as at **43**.

Figure 7 illustrates yet another form of connection means wherein contact stud inner section **44** is provided with a recess **45** of preferably conical cross-section. The contact stud outer section **46** includes a male connection portion **47** made up of expandable sections **48** which when in connecting position are expanded against the sides of recess **45** of the inner section **44** by suitable means such as bolt **49** acting through bolt head **50** by pressure exerted as by tightening nut **51**. Suitable connection means **52** are provided on the outer section **46** to allow connection of the outer section to suspension bars **23**.

Figure 8 illustrates a form of sectional contact stud similar to that illustrated in Figure 7 in that a male expandable section is used to connect the outer section **46** to the inner section **44**. Like parts in Figures 7 and 8 are numbered identically. The form of contact stud in Figure 8 differs mainly from that shown in Figure 7 by utilization of a sloped contact face between the inner section **44** and the outer section **46**. Such sloping surface is advantageous in that the sloping face **53** of inner section **44** may be arranged to be substantially flush with the surface of stationary casing **11** while the inner sections are enclosed therein so as to prevent any tendency for the unbaked paste to flow from the electrode mass into the connection means **45**. Sloping facing surface **54** on the stud outer section **46** when in connecting position will become flush with the sloping facing surface **53** of the contact stud inner section **44**. The arrangement of Figure 8 also differs from that shown in Figure 7 by utilization of another type of suitable suspension bar connecting means as indicated at **55**.

Figures 9, 10 and 11 illustrate yet another type of sectioned contact stud wherein the inner section **56** is provided with a female portion **57** of polygonal cross-section and the outer section **58** is provided with suitable suspension bar connection means **59** and the male portion **60** of matching polygonal cross-section. Use of this type of sectional stud contemplates the horizontal placement of inner section **56** in the electrode mass so as to obviate any tendency for the sections to separate when in operative arrangement. Figure 10 is a cross sectional view along the line **10**—**10** of the outer end section illustrated in Figure 9, showing an exemplary polygonal cross-section of the male portion **60**. Figure 11 illustrates an end view along the line **11**—**11** of contact stud inner section **56** illustrated in Figure 9 and illustrates an exemplary polygonal cross-section of the female member **57**.

According to conventional practice for the so-called horizontal stud arrangement, the contact studs are positioned in the electrode mass at an angle on the order of 20° with respect to the horizontal dimension as illustrated in Figures 1 and 2. Such downward disposition of the contact studs has been adopted so as to minimize the power loss in the electrode mass by reducing the distance between the inner end of the contact stud and the lower surface of the electrode. However, such slanting disposition gives rise to a tendency for the contact stud to be forced laterally away from the electrode mass by the action of the weight of the electrode mass. Placement of the contact studs in a truly horizontal position serves to remove the tendency for the contact sud to be forced laterally away from the electrode mass so that the structure of the contact stud sections may be simplified since they need not be locked against longitudinal separation when supporting the weight of the electrode mass. Such horizontal placement, moreover, need not materially increase the power loss in the electrode mass since the minimum average distance permissible between the surface of the contact stud and the lower surface of the electrode mass may be relatively reduced as a result of such placement.

It will be obvious that the various features and arrangements of sectional studs, stationary casing and suspension means disclosed are susceptible of wide application in the art. Though the electrode cross-sectional shape illustrated in Figures 1 and 2 is rectangular, it will be apparent such cross-section may be either circular or of other oblong configuration. A fewer or greater number of rows of countersunk inner contact stud sections than the five illustrated in Figures 1 and 2 may be utilized depending on the electrode height desired and the relative position of the unbaked portion of the electrode mass. Moreover, although the studs are shown in vertical alignment, the stud sections could be arranged as well in a staggered or alternating pattern. Similarly, other forms of suspension which operate directly from the frame structure may be utilized in lieu of or in conjunction with the auxiliary suspension chain means **21** and main suspension bars **23** without departing from the scope of this invention. Moreover, the bus bar connection means at the outer end of the outer section may take various forms other than those disclosed in Figures 3, 7 and 8 for example, such as protruding bars on the outer section cooperable with hook means on the suspension bars **23** or a surrounding sleeve arrangement mounted on the suspension bars to encircle the outer end section. Such surrounding sleeve connection means between the outer section and suspension bar would be particularly desirable in the stud form disclosed in Figures 9, 10 and 11 where the stud is arranged substantially perpendicular to the suspension bar, since such arrangement would have an inherent simplicity of construction and ease of manipulation.

Although as shown in Figure 2, aperture **18**, for the insertion of the contact stud inner sections into the electrode mass has an axis perpendicular to the stationary casing, it will be apparent that such aperture **18** may have sloping sides to facilitate contact stud inner section insertion if desired. Moreover, the contact stud inner section **16** may be placed in position at the top of the electrode mass rather than being inserted into the sides thereof, thus eliminating the necessity of having any break whatsoever in the stationary casing side, if desired, thus further reducing the height and weight of the electrode mass.

It will be further apparent that due to the unbroken nature of the sides of the stationary casing, such casing may be externally ribbed in any manner desired if considerations of weight and strength render additional lateral support desirable.

What I claim is:

1. The combination of a self-baking electrode mass comprising an upper plastic or unbaked portion and a lower baked portion, a stationary casing surrounding said electrode, said casing being provided with a row of spaced apertures in that zone of the casing where the lateral pressure of the electrode mass is relatively low, said apertures adapted to receive inner contact stud sections therethrough, removable inner sections of two-part contact studs inserted through said apertures and embedded within the electrode mass in such manner as to provide successive horizontal rows of embedded stud sections along the vertical axis of said electrode, the outer ends of said inner contact stud sections being within said stationary casing but closely adjacent the wall thereof, each row of embedded contact stud sections being securely fixed therein as the electrode mass passes downwardly through said stationary casing and is progressively baked, and with the outer sections of the two-part contact studs adapted to be conductively connected to the outer end of the embedded inner stud sections as each row of said embedded stud sections emerges from the bottom of the stationary casing.

2. The combination as in claim 1 wherein primary suspension means are provided for detachable connection with the outer end portion of the outer sections of the two-part contact studs and auxiliary suspension means are provided for detachable connection with the outer section of the two-part contact studs at such time when the primary suspension means is being detached from the lowermost row of contact studs and connected to the outer section of the contact studs in the next higher row which has emerged from the bottom of the stationary casing.

3. The combination as in claim 1 wherein the outer end of the inner section of the two-part contact studs are provided with means for connection with the outer section, said means being in the form of recesses, said inner stud sections being provided with shielding members adapted to cover said recesses and to prevent any of the unbaked electrode material from extruding into said recesses during passage of the electrode mass and embedded stud sections downwardly through the stationary casing.

4. The combination of a self-baking electrode mass having an upper plastic or unbaked portion and a lower baked portion, a stationary casing surrounding said electrode, said casing having a plurality of spaced apertures around the periphery thereof in a plane perpendicular to the vertical axis of said electrode and being in that area of the casing where the electrode mass is plastic or unbaked, said apertures adapted to receive inner contact stud sections therethrough, removable inner sections of two-part contact studs inserted through said apertures and embedded in the electrode mass in such manner as to provide successive horizontal rows of embedded stud sections along the vertical axis of the electrode, the outer ends of said embedded stud sections being flush with the inner surface of said casing, each row of embedded stud sections being securely fixed in the electrode mass as it passes downwardly through said casing and is baked, and with the outer sections of the two-part contact studs adapted to be connected in current carrying manner with the outer end of the embedded inner stud sections as each row of said inner stud sections emerges from the bottom of the stationary casing.

5. The combination as in claim 4 wherein primary suspension means are provided for detachable connection with the outer end portion of the outer sections of the two-part contact studs and shielding means are provided on the outer ends of the inner embedded stud sections during passage of the electrode mass through said casing to prevent adherence of electrode material over said outer ends and thus insure good conductive connection between the inner and outer contact stud sections.

6. The combination of a self-baking electrode comprising an upper plastic or unbaked portion and a lower baked portion, a stationary casing surrounding said electrode, a plurality of removable inner sections of two-part contact studs embedded within the electrode in such manner as to provide successive horizontal rows of embedded stud sections along the vertical axis of said electrode, the outer ends of said inner contact stud sections within said stationary casing being closely adjacent the inner wall thereof, each row of embedded contact stud sections adapted to be securely fixed within the electrode as the electrode mass passes downwardly through said stationary casing and is progressively baked, and a plurality of outer sections of the two-part contact studs adapted to be conductively connected to the outer end of the embedded inner stud sections as each row of said embedded stud sections emerges from the bottom of the stationary casing.

7. The combination of a self-baking electrode comprising an upper plastic or unbaked portion and a lower baked portion, a stationary casing surrounding said electrode with said lower baked portion extending below the bottom of said casing, said casing having a plurality of spaced apertures in that zone of the casing where the electrode is plastic or unbaked, said apertures adapted to receive inner contact stud sections therethrough, removable inner sections of two-part contact studs inserted through said apertures and embedded within the electrode in such manner as to provide successive horizontal rows of embedded stud sections along the vertical axis of said electrode, the outer ends of said inner contact stud sections within said stationary casing being adjacent the inner wall thereof, each row of embedded contact stud sections adapted to be securely fixed within the electrode as the electrode mass passes downwardly through said stationary casing and is progressively baked, and a plurality of outer sections of the two-part contact studs conductively connected to the outer end of the embedded inner stud sections as each row of said embedded stud sections emerges from the bottom of the stationary casing.

References Cited in the file of this patent

UNITED STATES PATENTS

317,154	Lowrie	May 5, 1885
596,151	Funcke	Dec. 28, 1897
881,519	Wilson	Mar. 10, 1908
1,115,027	Seabury	Oct. 27, 1914
1,357,564	Hughes	Nov. 2, 1920
1,645,428	Hosmer et al.	Oct. 11, 1927
1,686,474	Soderberg	Oct. 2, 1928
1,757,695	Westly	May 6, 1930
1,788,565	Davis	Jan. 13, 1931
1,887,640	Hickman	Nov. 15, 1932
1,912,560	Wiles	June 6, 1933
2,034,051	Lipp	Mar. 17, 1936
2,073,356	Torchet	Mar. 9, 1937
2,159,183	Sem	May 23, 1939
2,169,563	Legeron	Aug. 15, 1939
2,337,279	Sem et al.	Dec. 21, 1943
2,339,230	Hagerup-Larssen	Jan. 11, 1944

FOREIGN PATENTS

262,722	Great Britain	June 9, 1927
608,475	Great Britain	Sept. 15, 1948

OTHER REFERENCES

The Ford Model A Car (1930), by Page (Fig. 206, page 469). (Copy in Div. 26.)

Oct. 8, 1963 F. RITTER 3,106,595

PROCESS FOR THE OPERATION OF ELECTRIC FURNACES
BY MEANS OF CONTINUOUS ELECTRODES
Filed Nov. 5, 1959

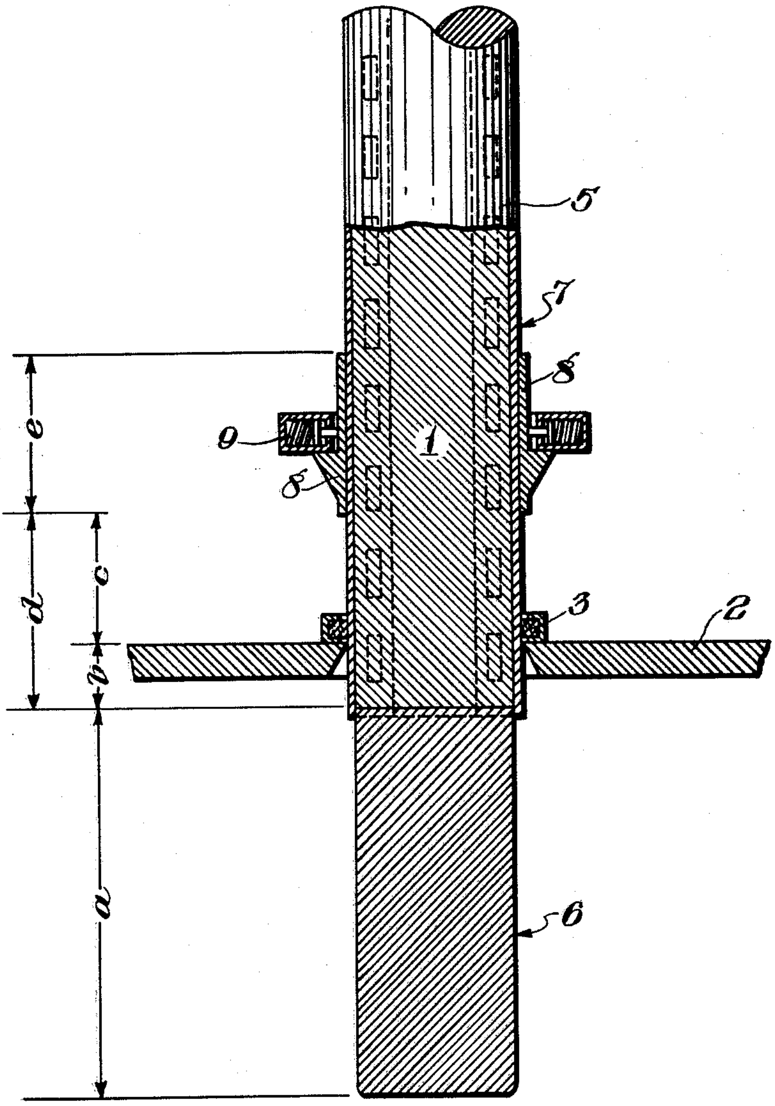

INVENTOR
Friedbert Ritter
BY Connolly and Hutz
ATTORNEYS

United States Patent Office

3,106,595

Patented Oct. 8, 1963

3,106,595

PROCESS FOR THE OPERATION OF ELECTRIC FURNACES BY MEANS OF CONTINUOUS ELECTRODES

Friedbert Ritter, Buschhof uber Konigswinter, Germany, assignor to Knapsack-Griesheim Aktiengesellschaft, Knapsack, near Cologne, Germany, a corporation of Germany

Filed Nov. 5, 1959, Ser. No. 851,013
Claims priority, application Germany Nov. 5, 1958
1 Claim. (Cl. 13—9)

The present invention relates to a process for the operation of electric furnaces by means of continuous electrodes provided with a metal shell and a metal reinforcement, said electrodes being baked in the furnace in which they are utilized. Said process consists in fitting the bottom edges of the current supplies in the unbaked part of the electrodes about 1 to 5, possibly also 2, or 3, or 4 meters above the upper end of the baked part of the electrodes, in conducting the current only through the metal shell and the metal reinforcement to the baked part of the electrodes, and in maintaining in these metal parts a current density not exceeding 2.5 amperes/mm.^{2} of the cross-section of the metal, for example the cross-section of iron. The process furthermore consists in that an electrode is used of which the metal shell and the metal reinforcement have a cross-section which, depending on the current density, suffices to prevent these metal parts from becoming hotter than +500° C. in the course of the operation when the current passes through them. In addition, the specific current load exerted on the total electrode does not exceed 4 amperes/cm.^{2} of the cross-section of the electrode.

The general make-up of a furnace and electrode assembly which illustrates the state of the prior art but not the improvement as found in the present invention is disclosed in U.S. Patent 1,440,724 issued to Soderberg.

It has already been proposed to fit the current supplies in the unbaked part of the continuous electrodes, and it has, on the other hand, also been endeavored to utilize the metal shell and the metal reinforcement of continuous electrodes for the current supply from the unbaked part to the baked part of the electrode; however, up to now the current supply has been positioned as close as possible to the baked part of the electrode or the current supply has been mounted on that part of the electrode that had already been baked. It was thus attempted to keep the passage from the electrode supports to the lower end of the electrode as short as possible and, in order to attain this object, electrode supports projecting into the furnace were used in which the current supply was fitted in the closed furnace beneath the cover of the furnace.

Now, I have found that it is possible to dispense with such electrode supports projecting into the furnace and to install the current supplies far above the upper end of the baked part of continuous electrodes by maintaining in the metal shell and the metal reinforcement a current density not exceeding 2.5 amperes/mm.^{2} of the cross-section of the metal, for example the cross-section of iron.

By limiting the current load, it is possible to conduct the total current supplied through the metal shell and the metal reinforcement to the baked part of the electrode when observing, moreover, the measure of maintaining the cross-section of the metal shell and the metal reinforcement such that these metal parts do not become hotter than +500° C. when the current passes through them in the course of the operation.

When the current density is higher than about 2.5 amperes/mm.^{2} of the cross-section of the metal, for example 4 to 5 amperes/mm.^{2} of the cross-section of the metal, the metal shell and the metal reinforcement become so hot due to the current passing through them and due to the heat passing up from the furnace that their breaking strength is impaired so that it occurs that the electrode breaks in the vicinity of the baking zone due to its own weight.

When maintaining the cross-section of the metal shell and the metal reinforcement great enough that both metal parts do not become unduly hot even in the case of a current density of, for example, 4 to 5 amperes, the cross-section of the shell and the reinforcement would, in the case of using iron, become so large that too much iron would get into the melt of the electric furnace which would render it impossible to work in an economic manner.

Thus, according to the invention, the cross-section of the metal shell and the metal reinforcement must be kept small. It need only be such that a current density not exceeding 2.5 amperes/mm.^{2} of the cross-section of the metal, for example the cross-section of iron, does not cause an undue heating.

The specific current load for the total electrode must not exceed 3 to 4 amperes/cm.^{2} of the cross-section of the electrode in order that the baking zone is as close as possible to the lower end of the electrode, i.e. that the baked part of the electrode is short. When admitting a higher current density, for example 6 to 7 amperes/cm.^{2} of the cross-section of the electrode, the electrode would in any case be baked right into the zone of the current supplies.

Experience has shown that continuous electrodes can only be operated in a satisfactory manner when the baked part of the electrode is short, i.e. when its length does not exceed double the diameter of the electrode. When a longer section of the electrode has been baked, this long, baked trunk is not only exposed to an increased extent to mechanical transverse forces but, due to its higher weight, is too much of a load for the electrode shell and its iron reinforcement from which the baked trunk is suspended wholly or to a considerable extent.

In comparison with the electrode supports projecting into the furnace which have been used hitherto, the process according to the invention has the advantage that the complicated cooling device being installed in closed furnaces below the furnace cover can be dispensed with and that the support need no longer project as closely as possible into the furnace but, on the contrary, can be fitted as high up as possible at the electrode.

Apart from the fact that the current supplies are thus exposed to a lesser strain by the furnace heat and owing to the less complicated construction, the invention offers the advantage that the current supplies need only be adjusted at long intervals because, the longer the distance from the cover of the furnace to the current supply, the longer the intervals at which the current supplies on the electrode have to be adjusted. The current supply on the electrode can thus travel downward with the electrode in the same manner as before for a considerably longer distance before it becomes necessary to pull the current supply up again because it has arrived at the bottom of the furnace cover.

A further modification of the invention consists in using stationary current supplies and supporting, lifting and lowering devices engaging at the upper ends of the electrodes.

In this manner the advantage is gained that the current supplies need no longer be adjusted at all because they no longer travel downward with the electrodes and are then pulled up again but are, for example, fixed opposite the cover of the furnace.

When working according to this modification, the current supplies are suitably only used in this capacity. The supporting, lifting and lowering of the electrode is effected by devices engaging at the upper end of the electrodes, for example at the top section of the electrode shell.

For the operation of furnaces by means of continuous electrodes according to the invention it is, furthermore, of considerable advantage that attention need not be paid to the state of baking of the electrodes. The baking zone of the electrode must, of course, remain beneath the cover of the furnace.

It was to be expected that a current condensation to the outside would occur in the electrodes so that the cross-section of the iron shell and the iron reinforcement would not suffice to conduct the current from the current supply to the baked part of the electrode without an excessive heating of the iron parts occurring.

It was all the more surprising that, in spite of the skin effect, such a passage of current is possible without increasing the plate thickness of the electrode shell even when the cross-section of the metal shell and the metal reinforcement is only as large as permitting a load of at most 2.5 amperes/mm.^{2} of the cross-section of the metal.

The single FIGURE of the drawing is an elevation partly in section showing the apparatus of the invention.

The following example serves to illustrate the invention, but it is not intended to limit it thereto:

Example

In a closed electric furnace for the preparation of phosphorus, three continuous electrodes 1 (only one being shown) of each 1350 mm. cross-section are arranged at the corners of an equilateral triangle whereby the distance between the axis of the electrodes is about 3000 mm.

The interior of the furnace is sealed against the outside atmosphere by a furnace lid 2 and by stuffing rings 3 arranged around the electrodes. The electrodes have an iron jacket 5 of 2 mm. thickness of the sheet and have a total iron cross-section together of about 220 cm.^{2}.

The electrodes extend downwardly from the furnace lid about 3500 mm. average into the furnace interior (*a* plus *b*). The combustion zone in which the electrode substance is baked in the interior of the electrodes has its upper end about 500 mm. below the surface of the furnace lid *b*. The electrode portion 6 below this combustion zone is solid, but portion 7 above this combustion zone is not baked and is somewhat soft.

The socket of the electrodes carrying the current consisting of, i.e. of a ring of ten contact plates 8 pressed by a thrust collar 9 each of a length of 120 cm. *e* is arranged so that it is above the furnace lid, namely with its bottom edge about 1 to 5 m. above the upper end of the burned part *d*, that is about 0.5 to 4.5 m. above the upper surface of the furnace lid *c*.

The furnace is now charged with the composition known for the manufacture of phosphorus and consisting of crude phosphate, carbon and silicic acid raw material and with an electric current of about 55,000 amperes per electrode. The voltage changes with the furnace efficiency desired in each case and amounts to several 100 volts. In the course of this operation, the electrodes do not become excessively overheated. The furnace can be operated in the usual manner.

It should be noted in this connection that the passage of the current need by no means solely bring about the heating but that the highest temperature occurs in the vicinity of the baking zone, i.e. within a zone in which the furnace heat passing up is also effective.

The novel process offers the advantage that the electrode supports projecting into the furnace and their complicated cooling devices can be dispensed with, that the electrode supports supplying the current need only be adjusted at longer intervals than usual hitherto or need not be adjusted at all at the electrodes, furthermore the construction of the device serving to displace the electrode can be more simple and the electrode operated solely according to operational requirements, without having regard to its state of baking.

In the process of the invention, the baked trunk of the electrode shall not exceed a length of about double the diameter of the electrode and thus not exceed a weight of, for example, 6 tons.

In a certain zone of the electrode, i.e. where the supporting function is transferred from the iron shell to the solidified electrode, the electrode, the iron shell and the iron reinforcement are—when maintaining the aforesaid weight—just about in a position to support the baked trunk of the electrode with safety.

The current load of the cross-section of the metal shell must, therefore, be kept below the aforesaid limit in order that the iron of the shell, in the critical range just above the baking zone, does not become hotter than is necessary to bring about the solidification of the electrode mass. Thus a normal electrode shell will not be heated to a substantial degree upon the passage of 2.5 amperes/mm.^{2}. Only in the vicinity of a temperature of +500° C. would a current density higher than 2.5 amperes/mm.^{2} endanger the solidity of the iron.

The total load of the electrode may not exceed 3 to 4 amperes/cm.^{2} since, otherwise, there would be baked too long and too heavy a part of the electrode so that, according to experience, the stability of the continuous electrode would be impaired.

The process for the operation of electric furnaces by means of continuous electrodes equipped with a metal shell and a metal reinforcement, said electrodes being baked in the furnace in which they are utilized, is thus characterized according to the present invention by the following features:

(*a*) The current supplies are fitted in the unbaked part of the electrodes in a manner such that their lower edge is about 1 to 5 meters above the upper end of the baked part of the electrodes;

(*b*) The current is only conducted through the metal jacket and the metal reinforcement to the baked part of the electrodes;

(*c*) The current density in the metal shell and the metal reinforcement is adjusted such that it does not exceed 2.5 amperes/mm.^{2};

(*d*) The proportion of the cross-section of the metal shell and the metal reinforcement to the cross-section of the total electrode is adjusted such that the specific current load exerted on the total electrode does not exceed 4 amperes/cm.^{2}.

Finally, there are used stationary current supplies as well as supporting, lifting- and lowering devices which engage the electrodes at their upper ends.

I claim:

In a process for operating electric furnaces with permanent electrodes equipped with metallic reinforcements, said electrodes being baked in the furnace in which they are used, wherein current is supplied to the unbaked part of the electrodes at a spaced distance above the upper end of the baked part of the electrodes and wherein said current is conducted only through the metallic reinforcements to the baked part of the electrode while maintaining the current density in the metallic reinforcements up to 4 amperes per mm.^{2}, the improvement which comprises supplying the current to the unbaked part of the electrodes at a distance of about 1 to 5 meters above the upper end of the baked part of the electrodes, maintaining the current density in the metallic reinforcements up to at most 2.5 amperes per mm.^{2}, and proportioning the cross-sections of the metallic reinforcements to the cross-section of the general electrodes so that the specific load of the entire electrode does not exceed the value of 4 amperes per cm.^{2}.

References Cited in the file of this patent

UNITED STATES PATENTS

1,440,724	Soderberg	Jan. 2, 1923
1,498,582	Soderberg	Jan. 24, 1924
1,972,849	Wisdom	Sept. 4, 1934
2,193,434	Sem	Mar. 12, 1940
2,338,936	Hagerup-Larssen	Jan. 11, 1944

Oct. 8, 1963 J. H. SMALLRIDGE ET AL 3,106,596

METHOD FOR REPAIRING SELF-BAKING ELECTRODES

Filed Nov. 10, 1961 2 Sheets-Sheet 1

Fig. 1.

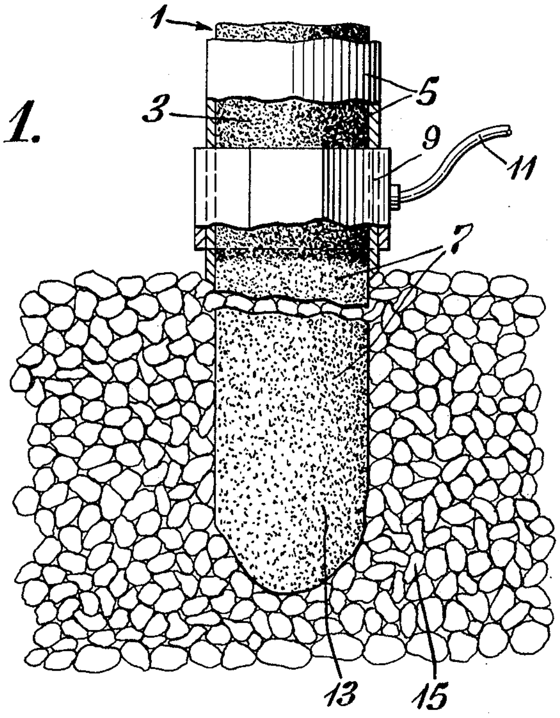

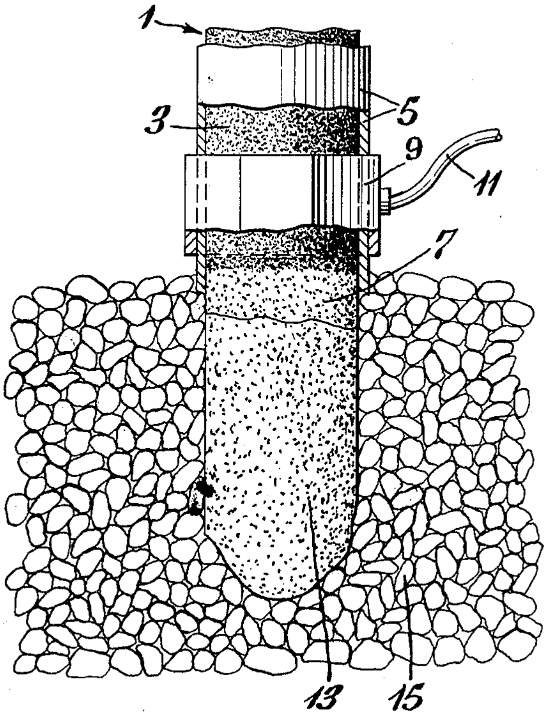

Fig. 2.

INVENTORS
JAMES H. SMALLRIDGE
SETH C. WILLARD

BY Frederick J. McCarthy, Jr.

ATTORNEY

Oct. 8, 1963 J. H. SMALLRIDGE ET AL 3,106,596

METHOD FOR REPAIRING SELF-BAKING ELECTRODES

Filed Nov. 10, 1961 2 Sheets-Sheet 2

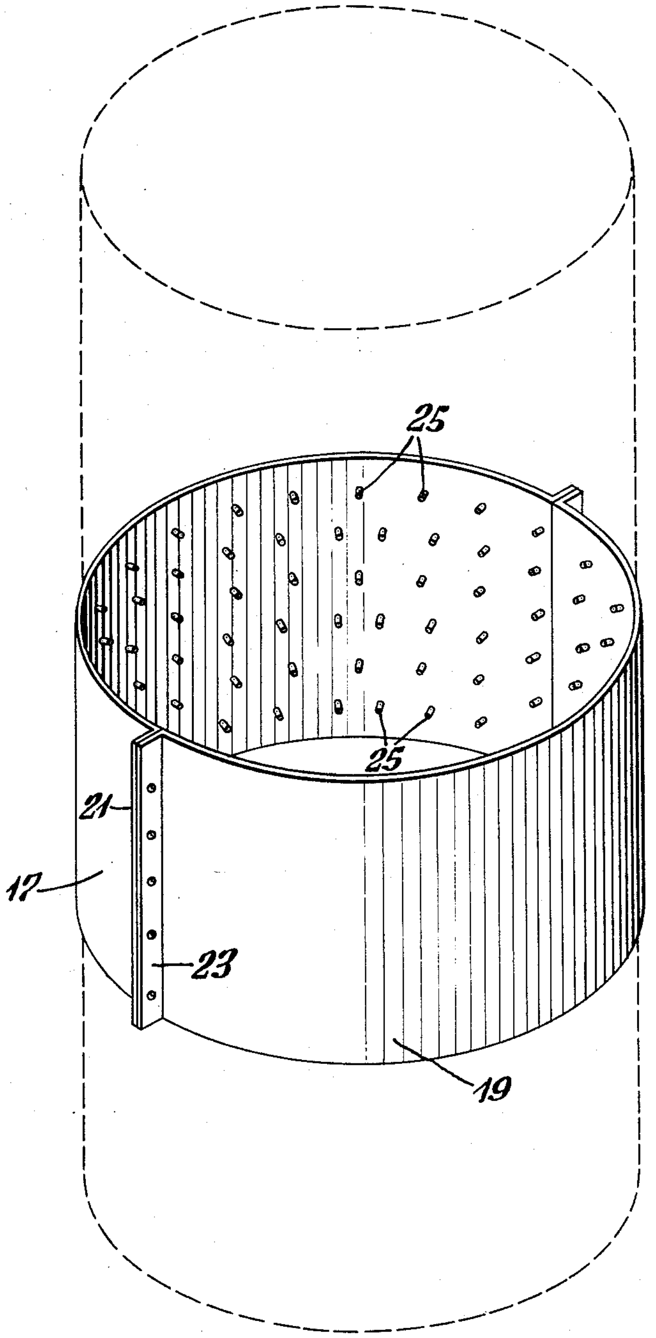

Fig. 3.

INVENTORS
JAMES H. SMALLRIDGE
SETH C. WILLARD

BY Frederick J. McCarthy, Jr.
ATTORNEY

United States Patent Office

3,106,596
Patented Oct. 8, 1963

3,106,596

METHOD FOR REPAIRING SELF-BAKING ELECTRODES

James H. Smallridge, Greenwich, Conn., and Seth C. Willard, Ashtabula, Ohio, assignors to Union Carbide Corporation, a corporation of New York

Filed Nov. 10, 1961, Ser. No. 151,478
4 Claims. (Cl. 13—18)

The present invention relates to electric furnace processes which employ self-baking electrodes. More particularly, the present invention relates to a method for minimizing delays in electric furnace processes which occur due to breakage of self-baking electrodes during operation.

Self-baking electrodes of the type disclosed in United States Patent 1,440,724 to Söderberg are employed in various operations in the electric furnace industry. It is a characteristic of these electrodes, commonly called "Söderberg" electrodes, that only the baked lower end portion is electrically conductive to any appreciable extent with the upper portion of the self-baking electrode comprising a metal-sheathed highly viscous, plastic mixture of carbonaceous matter with a binder such as pitch or tar. Under operating conditions, electrically conductive clamps are arranged in contact with the metal sheath for the purpose of supplying electrical energy to the electrode. The metal sheath serves as the main conductor of electric current in the electrode column above the fully-baked portion of the electrode, which portion extends downward from just below or slightly within the contact clamps.

As the lowermost portion of the electrode is gradually consumed in the electric furnace, the electrode column is progressively lowered into the furnace through the clamps, additional mix being added at the top of the electrode column for the purpose of maintaining continuous furnace operation. As a result of lowering the electrode through the clamps, additional unbaked mix material is exposed to the heat developed in the furnace and in the sheath. This mix material is consequently baked and becomes bonded to and integral with the already baked lower portion of the electrode. In order to achieve continuous furnace operation, it is necessary that an effective bond exist throughout the baked portion of the electrode. Since the materials in the electrode mix, coal, pitch and the like, are natural unrefined substances and therefore variable in characteristics, satisfactory bonding is not always achieved. As a consequence, when a poorly bonded zone is present below the electrode clamps, a break sometimes occurs, resulting in a so-called stub, and it becomes necessary to shut-down the furnace. Under these circumstances, the presently known practice is to break up the stub, by blasting or other means, so that it can be removed from the furnace. After removal of the stub, a steel plate is welded over the lower end of the electrode column to prevent, if possible, loss of the plastic mix above the break. The conventional procedure for starting a new electrode is then followed in order to produce a sufficiently extended new baked portion below the electrode clamps which can be satisfactorily employed in the furnace. This entire operation, i.e. removal of the stub and generation of a new baked portion, generally requires between six and eight days, depending on the size, i.e. diameter, of the electrode, and accordingly a severe economic penalty is placed upon the furnace operation.

It is therefore an object of the present invention to provide a method for restoring an electric furnace to full

operation with a minimum of delay after the occurrence of a stub-forming break in a self-baking electrode employed in the furnace.

Other objects will be apparent from the following description and claims taken in conjunction with the drawing in which:

FIGURE 1 shows, somewhat schematically, an elevation view of a self-baking electrode which has experienced a stub-forming break.

FIGURE 2 shows the electrode column of FIGURE 1 lowered in position to establish a forcible mating contact with the stub, and

FIGURE 3 shows a clamp for engaging the electrode column and stub which can be used in those instances when a satisfactory close fitting contact between the electrode column and stub cannot be achieved.

In accordance with the present invention, a method for repairing a self-baking electrode which has experienced a stub-forming break in an electric furnace comprises bringing the mating surfaces of the severed portions of the electrode into forcible contact; and supplying between about ¼ and ⅓ normal operating power to the electrode until additional electrode material is baked which is sufficient to permit normal furnace operation to be resumed.

With reference to the drawing, FIGURE 1 shows a self-baking electrode 1 having an upper unbaked section 3, enclosed by a metal sheath 5, and a lower baked section 7. Electrically conductive clamps 9 are arranged to contact sheath 5 and conductor 11 is provided to supply electrical energy to the electrode from a suitable source (not shown). A portion of the baked section of the electrode, stub 13, has broken away from the electrode column and settled slightly into the surrounding furnace charge 15 requiring shut-down of the furnace operation.

In accordance with the present invention, and as illustrated in FIGURE 2, the upper column of the electrode is lowered and thereby brought into close mating contact with stub 13, the stub being arranged in axial alignment with the electrode column. When the mating surfaces of the stub and electrode column are aligned and in contact, a forcible contact is provided by causing a portion of the weight of the electrode column to be supported by the stub.

Under most circumstances, when repairing a 42 inch diameter electrode, a force of about 2 to about 6 pounds per in.^{2} between the electrode column and stub is sufficient.

After forcible contact is established, electrical energy is once again supplied to the electrode through clamps 9. However, the value of the power input is restricted to between about ¼ and ⅓ normal operating value. The amount of heat developed in the furnace by the reduced power input will result in satisfactory continued baking of the plastic mix while at the same time causing the lowermost portion of the electrode to be gradually consumed in the furnace. A higher power input, on the other hand, will tend to disrupt the forcible supporting contact betwen the electrode column and stub and also prevent consumption of the stub as a result of the increased amount of heat and evolution of gas at the relatively high electrical resistance contact between the stub and electrode column. Lower values of power input have not been found sufficient to provide satisfactory baking of additional mix to compensate for consumption of the electrode.

Normal operating power values for electric furnace operations vary depending on the diameter of the particular electrode and to some extent on the particular mix employed. In general, however, normal operating power ranges between 12 megawatts and 25 megawatts for electrodes having diameters between 42 and 50 inches. Accordingly, the reduced power input values employed in the method of the present invention will most often range between about 3 mw. and 8 mw.

In the practice of the present invention, the reduced electrode power, i.e. between ¼ and ⅓ normal value, is applied continuously, except for short interruptions about every three or four hours to permit safe observation of the contact between the electrode column and stub. As previously mentioned, the lowermost portion of the stub is gradually consumed in the practice of the present invention and accordingly the electrode column is lowered, i.e. slipped to the same extent. As a result of the slipping, additional electrode mix is exposed to high temperatures and is consequently baked and bonded to the existing baked portion of the electrode.

During the period when the electrode power input is between ¼ and ⅓ normal, the electrode is preferably operated in a carbon deficient furnace so that the contact between the electrode column and stub can be conveniently inspected. In the case of a calcium carbide furnace, the surrounding charge during this period would be predominantly lime.

Under most circumstances, with self-baking electrodes of the type usually employed, the baking of a new portion of electrode mix sufficient to permit normal furnace operation will be completed in about 40 to 48 hours. Most often the electrode stub will have been substantially consumed in the same amount of time. If the stub has not been completely consumed by this time, the application of increased power to the electrode will accomplish this result in a very short period. In comparison with the 40 to 48 hours required in the present invention, when using previously known techniques for the same purpose, between six and eight days were required before normal furunace operation could be resumed.

It sometimes happens that a close fitting of the stub and electrode column cannot be achieved over a major portion of the joint. Under these circumstances, there is a very substantial electrical resistance at the contacting surfaces and the consequent I^2R generation of heat is considerable and causes excessive evolution of gas from the mix binder which tends to disrupt the supporting contact between the stub and electrode column and also reduces consumption of the stub. In order to reduce the excessive and undesirable generation of heat within the joint, an electrically conductive path is provided between the adjacent peripheral surfaces of the column and stub and shunting the joint. In this manner, the amount of heat at the vicinity of the joint is tolerable while the current in the lower baked portion of the electrode is sufficient to provide the heat necessary for satisfactory baking of additional mix as the electrode is slipped, and for consumption of the stub. In a preferred embodiment, the shunting electrically conductive path is in the form of a metal clamp of the type illustrated in FIGURE 3. The clamp of FIGURE 3 is suitably formed of steel plate and is seen to be constructed in two sections, 17 and 19, although more than two sections can be employed when desired.

When assembled, the clamp is cylindrical in form having a diameter corresponding to that of the electrode to be repaired. The clamp must be long enough to enclose the joint and provide an effective contact between the electrode column and stub. It is also of advantage to make the clamp sufficiently long to assist in mechanically strengthening the joint.

As shown in FIGURE 3, each section of the clamp is provided with drilled flanges 21 and 23 through which bolts may be fastened to secure the clamps about the joint (not shown). The inner surface of each clamp

section is provided with stubs 25 for the purpose of penetrating the electrode to thereby ensure good electrical contact and mechanical strengthening of the joint by reducing the possibility of relative movement between the electrode column and the stub.

The following examples are provided to more clearly illustrate the present invention:

Example I

A three-phase electric furnace employing 42 inch diameter Söderberg electrodes was in operation for the manufacture of calcium carbide. A break occurred in one of the electrodes at between 6 and 14 inches below the contact plates at an angle of about 10 degrees from horizontal. The resulting stub, about 75 inches in length, settled several inches into the surrounding furnace charge and tilted slightly from vertical. The electrical power input to the furnace was discontinued when the break was detected.

The stub was returned to axial alignment with the electrode column which was then lowered into mating contact with the stub. In order to ensure improved conductivity across the break, a steel clamp of the type illustrated was arranged around the joint between the electrode column and stub. The clamp was made from ⅜ inch plate having studs located on about 3 inch centers. The length of the clamp was 20 inches.

After the clamp was in place, about ⅓ normal operating power was applied to the electrode. At about three-hour intervals the power was shut off for a few minutes to permit safe inspection of the joint. As the lower end of the stub was consumed and baking of the mix progressed, the electrode was lowered further into the furnace and the forcible contact between the stub and electrode column was maintained.

After the elapse of 40 hours, 70 inches of new electrode had been baked which was sufficient to permit normal furnace operation. Additionally, at the end of the same period the stub had been substantially consumed. The electrode power input was therefore gradually increased to the normal value at this time and full operation of the furnace was resumed.

Example II

In another furnace of the same type an electrode break occurred and essentially the same procedure was followed except that a clamp was not employed since an almost total close mating contact was achieved between the severed portions of the electrode. Full operation of the furnace was resumed within 40 hours.

It can be seen from the above description that the present invention constitutes a beneficial contribution to the art by providing a method for restoring an electric furnace to full operation in a relatively short period of time after the occurrence of breakage of a self-baking electrode in the furnace.

What is claimed is:

1. A method for minimizing the delay in normal operation of a self-baking electrode which results from a stub-forming break in the baked portion of the electrode, said method comprising bringing the opposite surfaces of the severed portions of the electrode into forcible contact; supplying between about ¼ and ⅓ normal operating power to the electrode and providing a continuous supply of unbaked electrode mix and progressively lowering the electrode until sufficient electrode mix material is baked to permit resumption of normal electrode operation.

2. A method in accordance with claim 1 wherein the stub of the electrode is caused to support a substantial portion of the electrode weight to thereby provide a forcible contact between the severed portions of the electrode.

3. A method in accordance with claim 1 wherein an electrically conductive path is provided between the peripheral surfaces of the severed portions of the electrode to reduce the generation of heat at the contacting electrode

surfaces and thereby avoid disruption of the forcible contact therebetween.

4. A method in accordance with claim 1 wherein an electrically conductive path is provided between the peripheral surfaces of the severed portions of the electrode to reduce the generation of heat at the contacting electrode surfaces and thereby avoid disruption of the forcible contact therebetween, said electrically conductive path being in the form of a metal clamp engaging the severed portions of the electrode.

References Cited in the file of this patent

UNITED STATES PATENTS

2,032,240	Westhaver	Feb. 25, 1936
2,640,860	Herres	June 2, 1953

Jan. 23, 1968 J. R. ALEXANDER **3,365,533**

CONTINUOUS ELECTRODES

Filed Feb. 23, 1967 2 Sheets-Sheet 1

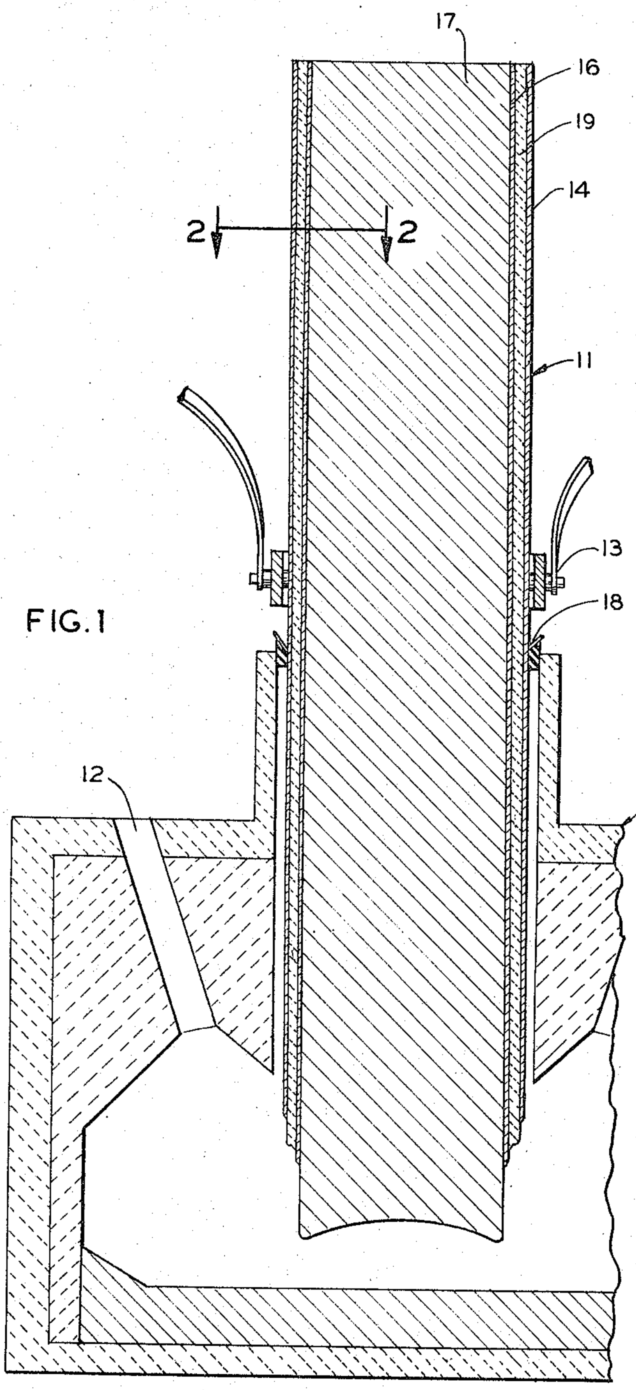

FIG. 1

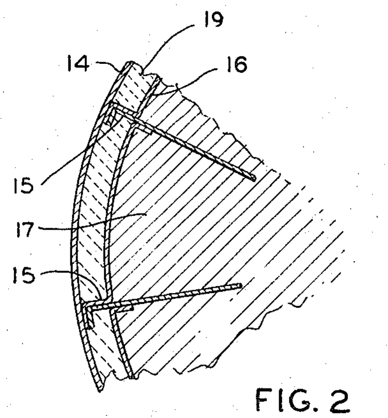

FIG. 2

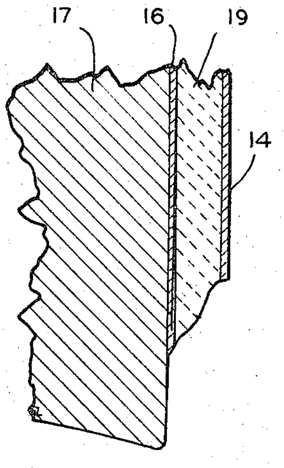

FIG. 3

INVENTOR
JOHN R. ALEXANDER
BY Donald R Castle
AGENT

Jan. 23, 1968 J. R. ALEXANDER **3,365,533**

CONTINUOUS ELECTRODES

Filed Feb. 23, 1967 2 Sheets-Sheet 2

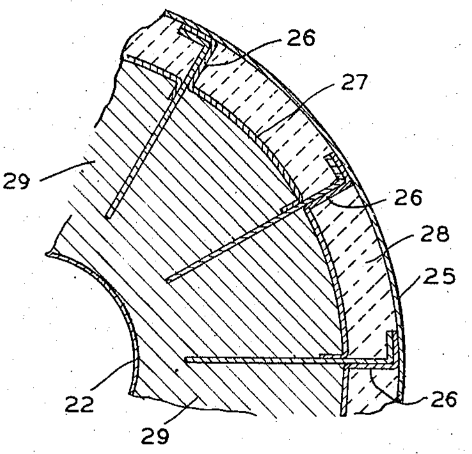

FIG. 5

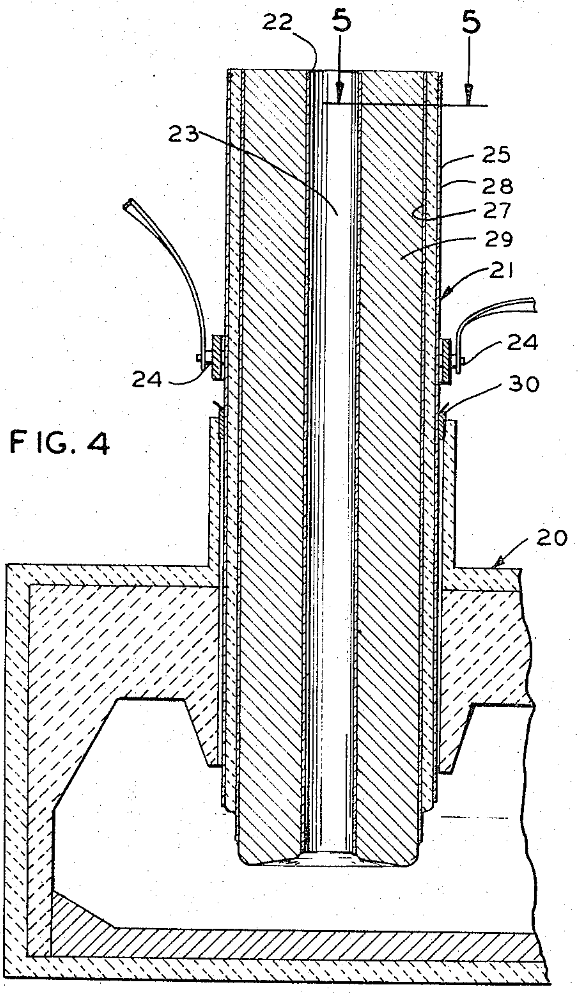

FIG. 4

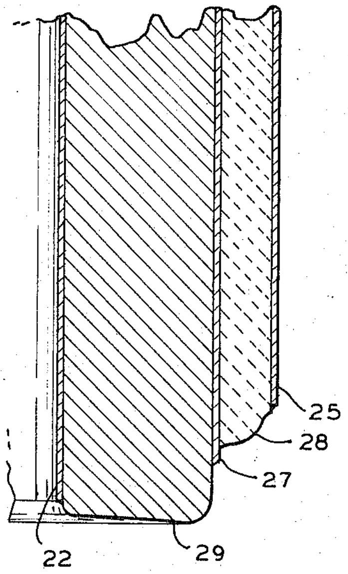

FIG. 6

INVENTOR
JOHN R. ALEXANDER
BY Donald R Castle
AGENT

United States Patent Office 3,365,533
Patented Jan. 23, 1968

3,365,533

CONTINUOUS ELECTRODES

John R. Alexander, St. Louis, Mo., assignor to Monsanto Company, St. Louis, Mo., a corporation of Delaware

Filed Feb. 23, 1967, Ser. No. 618,175
10 Claims. (Cl. 13—18)

ABSTRACT OF THE DISCLOSURE

An improved electrode for an electric furnace having an electrically conductive outer casing, and electrically conductive, tubular shell positioned inside the casing to form an annular space between the shell and the casing, and electrically conductive support means connecting the shell and casing, a heat insulating material filling the annular space between the shell and casing and an electrically and thermally conductive, thermally sensitive carbon-forming composition inside said tubular shell.

This invention relates to improved novel electrodes for electric furnaces and to processes utilizing them. More specifically, it relates to an improved novel electrode for electric furnaces utilizing carbon electrodes in the processing and treatment of raw materials which are electrically reduced.

There are a large number of processes which use electric furnaces such as processes for the production of elemental phosphorus, iron, and aluminum from ores containing their respective oxides. Other well known processes are those in which alloys of various metals are produced such as alloys of silicon, chromium, manganese, cobalt and the like and for the production of certain chemicals such as calcium carbide, alumina and the like.

The electrodes most commonly used in electric furnaces are carbon electrodes. These electrodes are continuously consumed during normal operations because of the extremely high heat and the corrosive gas produced from raw materials. The pre-baked solid carbon electrode is one of the types that has generally been used heretofore and is fabricated as a unit prior to insertion into the furnace. As the electrode is consumed, continuous columns are built by using various connecting means to join the individual pieces together. In some instances, particularly when the electrode is relatively large in diameter, that is excess of about 4 feet, the connecting means is often inadequate and often results in a portion of the partially consumed electrode dropping into the furnace. The electrode "breakage" results in high electrode consumption and unsatisfactory furnace operation.

An additional type of electrode has been used in some instances and is referred to herein as the "self-baking" type of electrode. This electrode consists of an electrically conductive casing and fins extending inwardly for supporting a paste which is electrically and thermally conductive but which is thermally sensitive and partially decomposes to form carbon. The paste consists of relatively small carbon granules and hydrocarbons. This mixture is relatively plastic at the temperatures at which it is placed into the electrode which generally are in the range of from about 0° to about 200° C. The higher temperatures which exist inside the furnace cause the hydrocarbons to vaporize and to decompose to carbon. The vaporized material escapes downwardly, the hydrocarbons are decomposed to carbon due to the high temperature and the carbon deposits in the voids between the carbon granules. A carbon tip is thereby produced which is extremely resistant to the high temperatures and corrosive gases inside the furnace. The gases inside the furnace are quite corrosive upon most materials from which the casings are made, particularly at the high temperatures that exist in the furnaces, therefore, holes tend to be corroded in the casing. The vaporized hydrocarbons and the hydrogen which evolves during decomposition of the hydrocarbons escapes through the holes in the casing and not downwardly through the tip of the electrode. The escape of either the vaporized hydrocarbons or the hydrogen in this manner results in a carbon which is less resistive to the hot gases and high temperatures. The electrodes are consumed more readily and in some instances the lower portion breaks resulting in unsatisfactory furnace operation. The self-baking electrodes also may be constructed in a continuous manner by building additional columns of the casing and fins and then filling the columns with the electrode paste.

The problems with electrode breakage and electrode consumption become more acute with both types of electrodes as the diameter of the electrode increases because current density at the tip of the electrode increases as the diameter increases. It has been reported that electrode burn-off increases approximately as the ratio of the square of the current density after an optimum current density is reached. The optimum current density will depend upon the particular furnace design and the particular process employed. Electrode "breakage," that is, the dropping off of major portions of the electrode also increases as the diameter of the electrode increases because of the higher temperatures created by the higher current densities.

The present invention overcomes many of the difficulties heretofore encountered by the previous electrodes by insuring that the carbon which is formed upon the decomposition of the hydrocarbons is deposited in the voids between the carbon granules in the paste.

The improved self-baking electrode of this invention has an outer electrically and thermally conductive casing, and an electrically and thermally conductive tubular shell positioned inside the casing to form an annular space between the shell and the casing. These elements will generally be round in shape, however, other geometric figures, such as ovals, hexagons, octagons and the like can be used with satisfactory results. The casing and the shell are connected and held in their relative positions to each other by electrically and thermally conductive support means, which can be, in general, any shape such as fins, studs, ribs and the like. The annular space between the casing and the shell is filled with a heat insulating material. Typical heat insulating materials include the cements used in furnace mortar and brick work which will be described more in detail hereinafter. The space inside the shell is filled with an electrically and thermally conductive, thermally sensitive, carbon-forming composition or paste. Typical examples include the electrode pastes normally employed in self baking types of electrodes, which also will be described in more detail hereinafter.

The casings which can be constructed from non-metallic materials of construction such as electrically conductive resins, structural carbon and graphite, fused silica and the like or metallic materials which are either ferrous materials such as carbon steel, cast iron, the various stainless steels, copper-coated steel, alloys of iron and aluminum and the like as well as the non-ferrous materials such as nickel, various nickel alloys of nickel and tin, alloys of nickel and copper, titanium, and the like. In most instances, metallic materials will be preferred. In most processes, ferrous materials will be satisfactory since they are relatively inexpensive and are electrically and thermally conductive. Of the ferrous materials, carbon steel is especially preferred. In some instances, however, when the temperatures inside the furnaces are relatively high, such as in the production of elemental phosphorus, it is preferred to construct the casing primarily from carbon steel and use a relatively thin layer of a highly electrically conductive material such as copper, aluminum and various highly electrically conductive alloys. This preferred embodiment enables a reduction in the operating temperature of the casing by reducing the electrical resistance and retains a relatively low cost casing. In most instances copper will be the preferred material for plating the carbon steel. The thickness of the layer of the highly conductive material will be dependent upon the particular electrode and the thickness of the casing. In most instances the layer will be from about 1.0% to about 25% of the total thickness of the casing.

The shell and support means can generally be constructed of carbon steel, however, any of the materials which are suitable for the casing can be used for either the shell or the support means.

The heat insulating material can be, in general, any material which is thermally and electrically stable up to about 700° C. and has a thermal conductivity coefficient of below about 12 B.t.u./hr./sq. ft./° F./ in. at about 500° F. In most instances it is preferred to use an insulating material which will undergo a hydraulic set at temperatures as low as about 25° C. and will undergo a thermal set at temperatures of about 600° C. Suitable materials include those which have thermal and electrical stability equivalent to the various refractory materials such as a high alumina content cement, cements prepared from bauxite clay, chrome brick, fireclay brick and the like. Especially preferred are the high alumina content cements that have a thermal conductivity coefficient of about 2 to 5 B.t.u./hr./sq. ft./° F./in. at about 500° F.

The paste which is thermally and electrically conductive and which is partially decomposed to form solid carbon is typically a blend of carbon granules and a high temperature pitch such as that obtained from petroleum and coal tar distillation. The carbon granules are generally smaller than about ¾ of an inch and generally constitute from about 75% to about 83% by weight of the mixture, with the pitch constituting the remainder of the material. Suitable materials include those known in the art used in the traditional self-baking electrodes.

Electrode breakage is significantly reduced in the electrode of this invention because "weak"spots are not developed in the carbon and mechanical linkages are not employed in the carbon portion of the electrode. The invention therefore enables the use of larger electrodes with appreciable less electrode consumption. The electrodes of this invention can also be continuous electrodes, that is, columns can be built containing the casing, support means and shell upon the partially consumed electrode and then the cement and paste pours into place.

Electrodes for electric furnaces can be either solid or "hollow." The solid electrode is utilized on furnaces where the furnace burden is fed to the furnace externally to the electrode. "Hollow" electrodes have one or more passages running the length of the electrode and thereby enable the burden to be fed through the electrode to the furnace hearth. "Hollow" electrodes are also used to provide a passage for removal of the gases which are produced in the furnace. The electrode of this invention can be either the solid type or the hollow type as desired for the particular use. In the hollow electrode of this invention at least one tubular member runs inside the paste the length of the electrode. This member can be constructed from any of the materials used for the casing, however, in most instances it will be made of carbon steel since the temperatures inside the passage will normally not be as high as those outside the electrode, since the tubular member will not generally carry the electric current. In most instances the tubular member will be round in shape, however, other shapes can be used if desired. In most instances only one tubular member is necessary, however, if desired a plurality of members can be used.

Two specific embodiments of the invention will now be described with reference to the accompanying drawings in which FIGURES 1, 2 and 3 refer to a solid electrode and FIGURES 4, 5 and 6 refer to a hollow electrode.

FIGURE 1 is a longitudinal sectional view of a phosphorous furnace equipped with a solid electrode of this invention.

FIGURE 2 is an enlarged view of a horizontal segment taken along line 2—2 in the electrode of FIGURE 1.

FIGURE 3 is an enlarged longitudinal sectional view of a segment of the lower portion of the electrode of FIGURE 1.

FIGURE 4 is a longitudinal sectional view of an electric furnace equipped with a hollow electrode of this invention.

FIGURE 5 is an enlarged view of horizontal segment taken along line 4—4 in the electrode of FIGURE 4.

FIGURE 6 is an enlarged longitudinal sectional view of a segment of the lower portion of the electrode of FIGURE 4.

With particular reference to FIGURE 1, a phosphorous furnace **10** is provided with a solid electrode **11**. During operation, a burden is supplied to the furnace through a conventional means **12** and an electric current is supplied to the electrode **11** through a conduit **13**. The carbon steel casing **14**, receives the curent and transmits it through the carbon steel support means **15** (shown in FIGURE 2 which are fins extending the length of the electrode) and the carbon steel tubular shell **16** to an electrically and thermally conductive, thermally decomposable paste **17**. During operation the temperature of the lower portion of the electrode **11** is about 2000° C. This results in the electrode being gradually consumed. The temperature outside the furnace housing above the sealing means **18** will generally approach the temperature of the air, however, due to the conduction of heat from inside the furnace, the paste **17** will be at about 200° C. At this temperature the paste is in a molten state but the hydrocarbons contained therein have not reached their decomposition temperature. The electrode paste **17** is a typical paste used in a self-baking electrode and contains carbon granules of a relatively small size, that is, smaller than about ⅜" diameter and contains about 17% by weight of a high temperature pitch derived from the distillation of coal tar. As the electrode **11** is consumed and moves down into the furnace, the temperature of the paste increases so that inside the furnace the temperature of the electrode paste ranges from about 400° C. at the upper portion just inside the furnace **10** to about 2000° C. at the lower portion. The hydrocarbons in the paste **17** decomposes to form hydrogen and carbon at temperatures of from about 400° C. to 600° C. The hydrogen escapes downwardly through the electrode tip since the tubular member **16** is protected from the heat and hot gases by a refractory cement **19** and therefore is not corroded. The carbon deposits in the voids between the carbon granules.

The casing **14**, the support means **15** and the tubular member **16** are each constructed of carbon steel. The heat insulating material **19** is a high alumina content refractory cement having a thermal conductivity coefficient of about 3 and undergoes a hydraulic set outside the furnace housing and a ceramic set inside the furnace when the temperature of the cement reaches about 700° C.

Referring to FIGURE 3, the casing **14** is the first of the members to be consumed since it is subjected to the hot gases inside the furnace throughout the period of time which requires for the electrode to be completely consumed and carries a large portion of the electric current. The heat insulating material **19** is later consumed because it is more stable to the higher temperatures than is carbon steel and does not carry the electric current. The carbon steel tubular shell **16** is consumed after it is directly exposed to the high temperatures by the consumption of the heat insulating material **19**. The paste **17** which has partially thermally decomposed forms a carbon which is extremely resistant to the high temperatures and to the corrosive gases contained within the furnace 10. An increased electrode life over any electrode heretofore known is achieved. For example, an electrode having an outside diameter of about 70 inches and operating at a current density of from about 2 to 4 amperes per square centimeter is consumed at the rate of about ⅓ inch per hour in a phosphorus furnace in which the temperature of the electrode tip is about 2000° C.

In particular reference to FIGURE 4 an electric furnace **20** is provided with a hollow electrode **21**. A carbon steel inner tubular member **22** (shown in FIGURE 5) provides a passage **23** throughout the length of the electrode **21** for the introduction of a burden to the furnace. During operation an electric current is supplied to the electrode **21** through conduit **24**. The other elements of the electrode **21**, that is the casing **25**, the support means **26** (shown in FIGURE 5), the tubular shell **27**, the refractory cement **28** and the paste **29** are each constructed from the same materials and each function in the manner as described in reference to FIGURES 1, 2 and 3.

The electrode is sealed in the furnace by a conventional sealing means **30**. The burden supplied to the furnace is about 150° F., thus the temperature of the carbon steel inner tubular member **22** thereby is below about 1200° C. for the major portion of the electrode **21**. At the temperature no appreciable corrosion of the carbon steel inner tubular member occurs.

The size of the electrode, the thickness of the casing, shell and tubular member, if a hollow electrode is desired will be dependent upon the particular furnace design and can be determined from engineering guidelines established for electric furnaces. Additionally, the width of the space between the casing and the shell will be dependent upon the temperature outside the electrode, the heat insulating material used and the materials of construction used for the shell. These factors, of course, will be dependent upon the particular furnace and electrode design and the process in which the electric furnace is being used. For example, in the production of elemental phosphorus, satisfactory operation is achieved using an electrode having a tubular carbon steel casing, having a diameter of about 6 feet and a thickness of about 0.2 to about 0.3 inch, and a space of from about 2.2 to about 3.0 inches between the casing and a carbon steel shell (having a thickness of from about 0.08 inch to about 0.12 inch), which space is filled with a high alumina content refractory cement having a thermal conductivity coefficient of about 2 B.t.u./hr./sq. ft./° F./in. at about 500° F.

What is claimed is:

1. An electrode for an electric furnace comprising (a) an electrically conductive casing, (b) an electrically and thermally conductive tubular shell positioned inside said casing to form an annular space between said shell and said casing, (c) electrically and thermally conductive support means connecting said casing and said shell, (d) a heat insulating material filling said space between said shell and said casing and (e) an electrically and thermally conductive, thermally sensitive, carbon-forming paste inside said tubular shell.

2. An electrode according to claim **1** where said casing, said shell and said support means are each metallic materials.

3. An electrode according to claim **2** where said metallic materials are ferrous metals.

4. An electrode according to claim **1** wherein said support means are fins extending radially from said casing to said shell and extend the length of said electrode.

5. An electrode according to claim **4** wherein said casing, said shell and said support means are each constructed from a ferrous metal.

6. An electrode according to claim **5** wherein said shell and said support means are each carbon steel.

7. An electrode according to claim **6** wherein said casing is carbon steel.

8. An electrode according to claim **7** wherein said casing contains a relatively thin layer of copper.

9. An electrode according to claim **2** wherein at least one inner tubular member extends the length of said paste to thereby provide a passage extending the length of said electrode.

10. An electrode according to claim **9** wherein said casing, said shell, said support means and said inner tubular member are each constructed from carbon steel.

References Cited

UNITED STATES PATENTS

1,640,735	8/1927	Soderberg	13—18
1,691,505	11/1928	Walther	13—18
2,764,539	9/1956	Horvitz	204—67

FOREIGN PATENTS

529,118	6/1931	Germany.

BERNARD A. GILHEANY, *Primary Examiner.*

H. B. GILSON, *Assistant Examiner.*

Aug. 11, 1970 J. A. VAN NOSTRAN ET AL **3,524,004**

NON-METAL REINFORCED SELF-BAKING ELECTRODE
FOR ELECTRIC FURNACES

Filed Dec. 3, 1968 2 Sheets-Sheet 1

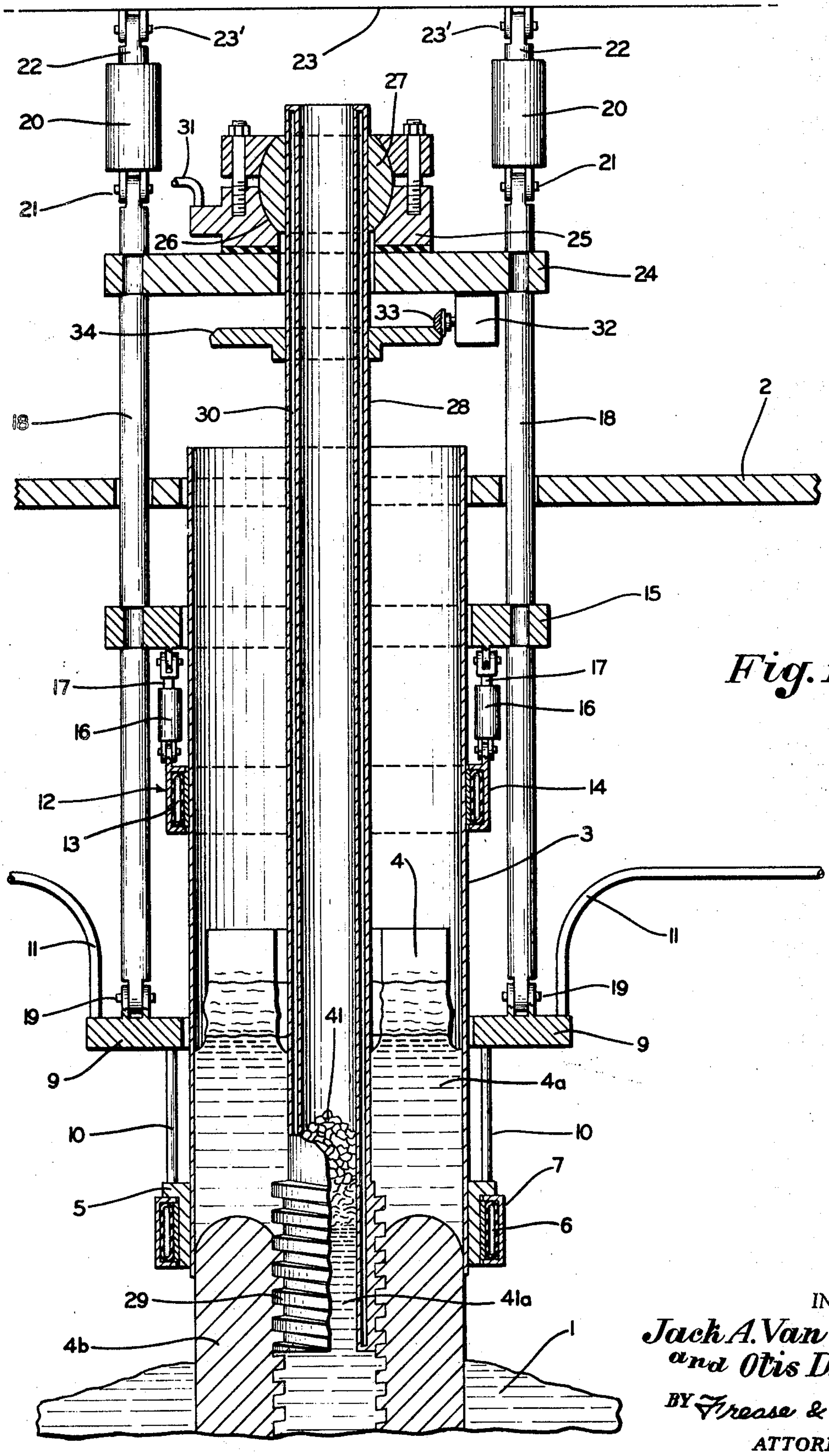

Fig. 1

INVENTORS
Jack A. Van Nostran
and Otis D. Jordan
BY *Frease & Bishop*
ATTORNEYS

Aug. 11, 1970 J. A. VAN NOSTRAN ET AL 3,524,004

NON-METAL REINFORCED SELF-BAKING ELECTRODE
FOR ELECTRIC FURNACES

Filed Dec. 3, 1968 2 Sheets-Sheet 2

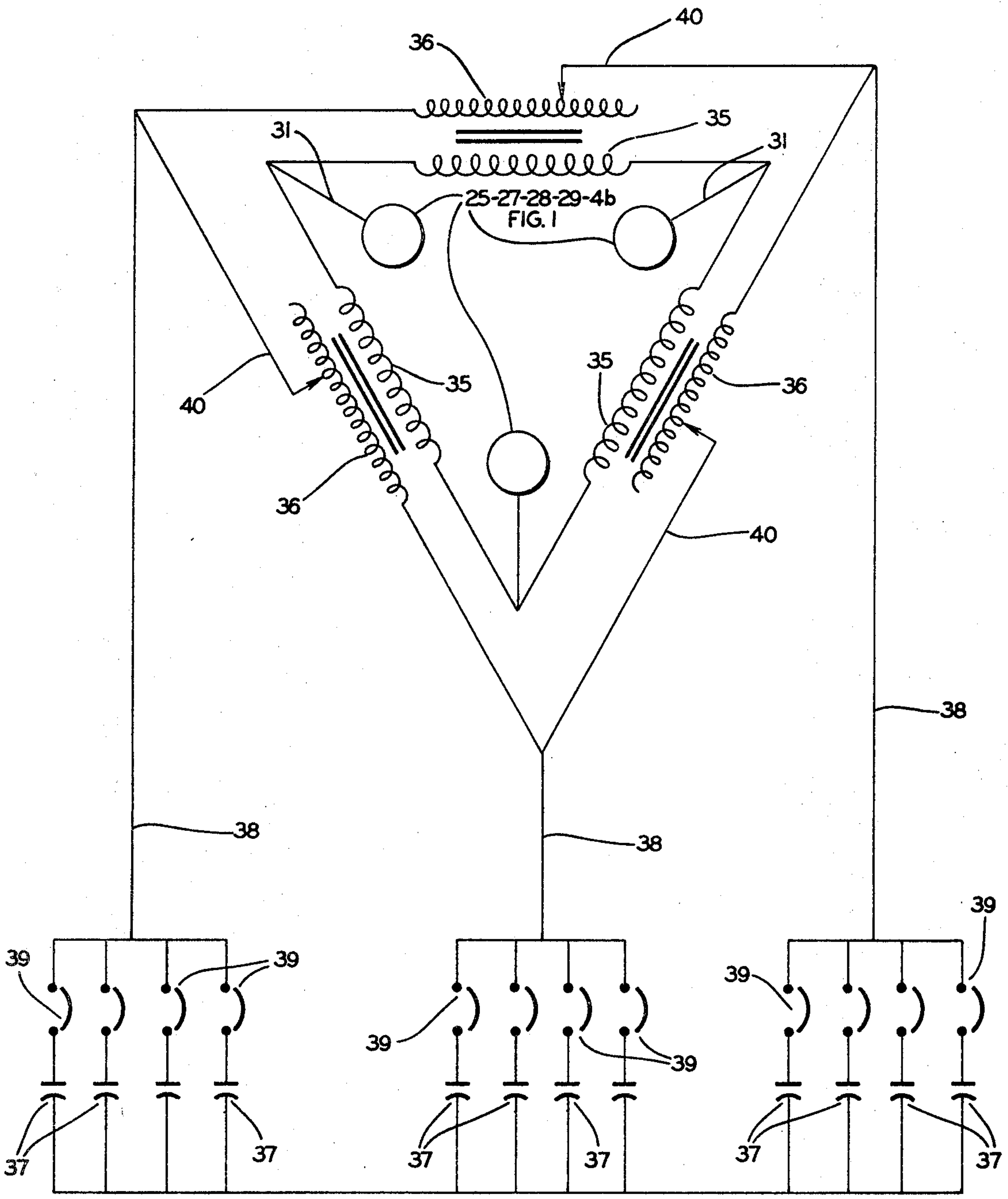

Fig. 2

INVENTORS.
Jack A. Van Nostran
and Otis D. Jordan
BY *Frease & Bishop*
ATTORNEYS

United States Patent Office

3,524,004
Patented Aug. 11, 1970

3,524,004

NON-METAL REINFORCED SELF-BAKING ELECTRODE FOR ELECTRIC FURNACES

Jack A. Van Nostran and Otis D. Jordan, North Canton, Ohio, assignors to Ohio Ferro-Alloys Corporation, Canton, Ohio, a corporation of Ohio

Filed Dec. 3, 1968, Ser. No. 780,668
Int. Cl. H05b *7/18, 3/62, 3/40*
U.S. Cl. 13—14 **14 Claims**

ABSTRACT OF THE DISCLOSURE

A self-baking electrode for electric furnaces, including a cylindrical metal casing extending into an electric furnace with means supporting the casing with its lower end located well above the furnace charge. A metal supporting tube extends downward concentrically through the cylindrical casing with coarse, deep screw threads upon its lower portion. Means, such as motor-driven gearing, is operatively connected to the upper portion of the tube for rotating it relative to the cylindrical casing. A contact clamp is clamped upon the lower end of the cylindrical casing and connected by condutors to a lain transformer or other conventional source of electric power. A ball and socket rotating contact and non-rotating contact assembly is provided at the upper end of the tube and is connected by conductors with the electric power source, or to power factor correctional devices if desired. Carbon paste is inserted into the open tops of the cylinder and tube and as the paste descends into the heat zone of the furnace it first becomes plastic and completely fills the cylinder and tube, and then undergose a coking or baking process and becomes hard carbon. From time to time, as the lower end o the hard carbon electrode is burned away in the furnace charge, the tube may be rotated within the hard carbon electrode causing it to slide downward through the casing into the furnace charge.

BACKGROUND OF THE INVENTION

Field of the invention

The invention relates to the construction and use of self-baking electrodes in electric arc furnaces and to a novel method of producing such electrodes, and more particularly to an improvement in the art of making and using self-baking electrodes in which virtually no metal is introduced into the furnace charge by the electrode.

Description of the prior art

Under present practice, self-baking or Soderberg-type electrodes are produced in electric furnaces by suspending in the furnace cylindrical steel casings of the diameter of the desired electrode.

These casings are held in the support clamps and electrical power clamps ordinarily used to support electrodes in electric furnaces and to conduct electric power thereto, and they extend from the crucible of the furnace upward to an area above the furnace, passing through hoods or covers and having their upper open ends in an area wherein men may work.

Each casing is provided with a number of internal reinforcing fins equally spaced around the inside perimeter of the casing and extending radially toward the axis thereof. These fins not only reinforce the electrode in its formative stage but also serve to conduct electrical current from the electric contact clamps to the cured or hardened portions of the electrode, and further serve the purpose of conducting heat from the cured or hardened portions of the electrode to those portions thereof that are in the process of curing and for which purpose much heat is required.

These casings are filled from above with carbon paste, which is a mixture of powdered anthracite coal, powdered coke and pitch. As this carbon paste descends into the heat zone of the furnace, it first becomes plastic and completely fills the casing, after which it undergoes a coking or baking process and becomes hard carbon before it finally descends into the crucible zone of the furnace.

As an electrode is consumed, new sections of metal casing are welded to the top thereof, at both the junctures of the casing sections and the reinforcing fins therein, to make a continuous unit of uniform strength and conductivity.

As the lower portion of an electrode is consumed the clamps are operated in conventional manner to lower the self-baked electrode, including the steel casing in which it is enclosed, thus introducing the steel casing, with the steel reinforcing fins therein, into the furnace charge.

The iron contained in the casing and fins is consumed by the furnace and enters into the product being made in the furnace. Since iron cannot be tolerated in some products, it has not heretofore been possible to use self-baking electrodes in furnaces making such products.

In an effort to overcome this problem, the outer casing has been constructed separately from a centrally located reinforcing lattice or "Christmas tree" of stainless steel imbedded in the electrode and supporting the weight of the same.

The electrode is formed of carbon paste which is hardened in the manner above described and the hard carbon portion thereof is progressed into the furnace at the required rate, while the outer casing is progressed through the holders at the minimum rate possible, resulting in a differential rate of progression between the electrode and the outer steel casing thereof.

Although this construction reduces to some degree the amount of iron carried into the furnace by the steel casing of the electrode, it has serious disadvantages as follows:

First, the metal contained in the central support lattice or "Christmas tree" is carried into the furnace charge. For this reason the lattice or "Christmas tree" must be of very light construction to limit this contamination of the product with iron.

Secondly, the necessarily light construction of the central support lattice or "Christmas tree" renders it ineffective for the purpose of inducting heat from the cured or hardened carbon portion of the electrode to the plastic portions thereof.

Thirdly, since the central support lattice or "Christmas tree" is not attached to the cylindrical steel casing, no electrical power is made to flow into the central portions of the electrode such as is the case when reinforcing fins are attached to the interior of the casing.

Thus, the heating and curing effect of the electrical current is lacking in the central portions of such electrodes, thus limiting the possible diameter of any electrode thus produced. In actual practice, such electrodes have, as of the present, been limited to approximately 40 inches in diameter.

SUMMARY OF THE INVENTION

In general terms, the invention may be briefly described as including a cylindrical metal casing extending into the top of an electric furnace, casing support clamp means around an intermediate portion of the casing and suspending it from a support header by means of hydraulic cylinders, contact clamps around the lower end portion of the casing and connected by conductors to a source of electrical power such as a transformer. The contact clamps are carried by a support structure to which the support header is attached. This support structure extends upwardly and is supported by hydraulic cylinders which may be actuated to move the entire electrode column vertically in either direction relative to the furnace.

The support structure carries a nonrotating contact spaced above the top of the casing and concentric therewith. Flexible conductors connect the nonrotating contact to the power source or to power factor correctional devices as desired. A rotating contact is journalled in the nonrotating contact or bearing in the form of a ball and socket joint.

This rotating contact is fixed to the upper end of a metal tube suspended axially within the casing and extending some distance below the same. The lower end of this metal tube has coarse deep screw threads formed upon its exterior. Any suitable method of rotation of the tube **28** may be provided.

The upper end for the electrode casing is open and extends upward through various hoods above the furnace in a conventional manner to an area suitable for workmen to occupy to add carbon paste to the casing as needed, and to weld casing sections upon the top of the casing if and when the same may be necessary.

The upper end of the metal tube is also open so that chunks of carbon paste may be added thereto as needed. The rotatable tube together with its rotating contact or journal and nonrotating contact or bearing are all constructed of a suitable strong and conductive metal.

As the carbon paste descends into the hot zone of the furnace it first becomes plastic and completely fills the casing, after which it undergoes a coking or baking process and becomes hard carbon. From time to time, as necessary, the support tube is rotated, unscrewing the hard carbon electrode therefrom and feeding it down out of the casing into the furnace charge.

As the chunks of carbon paste descend in the tube, the carbon paste becomes plastic and entirely fills the opening in the hard carbon electrode formed by the screw threads on the lower end of the tube, after which it is also cured or baked to become hard carbon.

It is, therefore, an object of the invention to provide a self-baking electrode for electric furnaces which eliminates virtually all metal from entering the furnace from either casing or central reinforcing structure.

Another object of the invention is to provide a self-baking electrode of the character referred to which provides means whereby heat is effectively conducted from the hardened portions of the electrode to the plastic portions thereof.

A further object of the invention is to provide such a self-baking electrode which provides means whereby electrical currents are caused to flow through the central portions of the electrode in the curing zone.

A still further object of the invention is to provide a self-baking electrode of this type which is so constructed that it provides an improved distribution of electrical current in the electrode.

Another object of the invention is to provide a self-baking electrode of the character referred to which greatly reduces, and in fact nearly eliminates, the casing used and thereby reduces electrode costs.

A further object of the invention is to provide such a self-baking electrode with improved means for progressing an electrode or casing-enclosed electrode through the casing support clamps and contact clamps and into the furnace as required.

A still further object of the invention is to provide a self-baking electrode of this type having means for supporting and progressing the hardened electrode independently of the casing support clamps and contact clamps.

Another object of the invention is to provide a self-baking electrode of the character referred to with means for conducting electrical current to the central portions of the electrode independently of the contact clamps.

A further object of the invention is to provide such a self-baking electrode with means for supporting and progressing the electrode on an axially disposed vertical feed screw.

A still further object of the invention is to provide a self-baking electrode of this type with means for causing electrical currents to flow to the central portions of the electrode by way of said axially disposed feed screw.

Another object of the invention is to provide a self-baking electrode of the character referred to with means for connecting power factor correctional and control devices to the electrode by way of said axially disposed feed screw.

It is also an object of the invention to provide such a self-baking electrode with a non-progressing axially disposed feed screw connecting the hardened portions of the electrode to a support and feed screw drive mechanism.

A further object of the invention is to provide a self-baking electrode of this type in which the axially disposed feed screw is hollow.

A still further object of the invention is to provide a self-baking electrode of the character referred to having means for introducing carbon paste to the electrode baking zone by way of the hollow axially disposed feed screw.

It is another object of the invention to provide a self-baking electrode of the character referred to in which the hollow feed screw is fluid cooled or heated.

And finally, it is an object of the invention to provide such a self-baking electrode with means for conducting electrical current between rotating and nonrotating parts of the feed screw mechanism.

These and other objects, apparent from the drawings and following description, may be attained, the above-described difficulties overcome and the advantages and results obtained, by the apparatus, construction, arrangement, and combinations, subcombinations and parts, and methods, steps, procedures, and modes of operation, which comprise the present invention, a preferred embodiment of which, illustrative of the best mode in which applicants have contemplated applying the principle, being set forth in detail in the following description and illustrated in the accompanying drawings.

BRIEF DESCRIPTION OF THE DRAWINGS

FIG. 1 is a vertical sectional view through self-baking electrode mechanism embodying the invention; and

FIG. 2 is a diagrammatic view showing the connection of the three electrodes of an electric furnace to a power factor correctional and control device including a delta-delta arrangement of transformers with means for connecting the same to capacitors.

DESCRIPTION OF THE PREFERRED EMBODIMENT

Referring now more particularly to the embodiment illustrated, the upper portion of a furnace charge is indicated at **1**. The furnace itself is not illustrated in the drawings. As in usual practice, there are various hoods located above the furnace, one of which is indicated in FIG. 1 at **2**.

Each self-baking electrode is formed within a vertically disposed, cylindrical, metal casing **3**, the lower end of which extends into the furnace and terminates above the furnace charge while the upper end of the casing is open and extends upward through the various hoods such as **2**, above the furnace, to an area suitable for workmen to occupy while adding carbon paste to the casing as needed, and while welding on a new casing section if and when the same should ever become necessary.

One purpose of the metal casing **3** is to contain and give proper form and support to the carbon paste **4** after it becomes plastic, as indicated at **4***a*, and until it has been cured and hardened into a hard carbon electrode, as seen at **4***b*.

Another purpose of the metal casing **3** is to conduct electrical power from the contact clamps **5** to the electrode *4b*. Still another purpose of this metal casing is to conduct heat from the furnace charge **1** and the electrode *4b* to the carbon paste **4** and *4a*.

The contact clamps **5** consist of a flexible inflatable envelope **6**, within a rigid metal ring **7** which may cause the metal clamping members **5** to grip the casing **3** when the flexible envelope **6** is subjected to internal fluid pressure which may be either gas or liquid.

The clamping members **5** are connected to conductor support members **9** as by the depending conductors **10**, and the conductor supports **9** are connected by flexible conductors **11** to the main power supply transformer and associated electrical equipment (not shown) that conventionally supply electrical power to the electrodes of an electric arc furnace.

In addition to being supported by the contact clamps **5**, the cylindrical metal casing **3** is also supported by a pressure clamp, indicated generally at **12**, which includes a flexible, inflatable member **13** within a rigid ring **14**, and which may be made to tightly grip the casing **3** when the flexible member **13** is subjected to an internal pressure of fluid in the form of either gas or liquid in any conventional manner.

This type of electrode and casing support is conventional in self-baking electrode furnaces and the construction and operation are well known and understood by those versed in the art. The pressure clamp assembly **12** is attached to a support header **15** by means of hydraulic cylinders **16** and cooperating piston rods **17**. As in common practice, when the pressure clamp assembly **12** is moved downward by the hydraulic cylinders **16** while, at the same time the pressure clamp is made to grip the cylindrical casing **3**, the casing will be slidably moved downward through the contact clamps **5**.

And conversely, when the pressure clamp assembly **12** is released until it no longer grips the casing **3**, it may be moved upward relative to the casing, thereby preparing for further downward movement of the casing, if and when necessary.

The support header **15** is attached to a structure including the rods **18**, connected at their lower ends to the conductor support members **9**, as indicated at **19**, and at their upper ends to the hydraulic cylinders **20**, as indicated at **21**. The piston rods **22** of the cylinders **20** are connected to a suitable support **23** as indicated at **23'**. The hydraulic cylinders **20** and piston rods **22** thereof, may be actuated to move the entire electrode column up or down relative to the furnace as desired.

The horizontal support member **24** is carried by the upper portions of the rods **18**, and forms a part of the structure suspended from the hydraulic cylinders **20**. A nonrotating contact and bearing **25**, having a partially spherical central socket **26**, is mounted upon the horizontal support member **24**.

A companion rotating, semispherical contact and journal **27** is rotatable within the socket **26** of the nonrotating contact and bearing **25**. The rotating contact and journal **27** are rigidly attached to the exterior of the upper end portion of a metal tube **28**.

The metal tube **28** is suspended from the rotating contact and journal **27** and extends downwardly therefrom concentric to the axis of the cylindrical casing **3**, and terminates at a proper distance below the bottom of the contact clamps **5**.

A suitable section of the tube **28**, preferably the lower end portion thereof as shown in FIG. 1, is threaded on the exterior with a coarse, deep screw thread as indicated at **29**. The wall of the tube **28** is formed of a double shell having a space **30** therebetween whereby it may be fluid cooled or heated by any conventional means, either liquid or gas.

The entire tube **28**, including the threads **29** thereon, the rotating contact and journal **27**, and the nonrotating contact and bearing **25** are all formed of a suitably strong and conductive metal. The bearing surface between the rotating contact and journal **27** and the nonrotating contact and bearing **25** is made in such manner as to carry heavy weight and, at the same time, conduct heavy electrical currents while rotating as well as while stationary.

Suitably sized flexible conductor cables **31** are connected at one end to the nonrotating contact and bearing **25**, the other ends thereof being adapted to be connected to various electrical apparatus as hereinafter described.

For the purpose of rotating the tube **28** when desired, a rotational power unit is provided. For the purpose of illustration only this is indicated as a motor **32** carried by the horizontal support member **24**, a bevel pinion **33** upon the shaft of the motor and a bevel gear **34** fixed upon the exterior of the tube **38** and meshing with the pinion **33**. Any conventional electric circuit may be provided for the motor **32** with conventional switch means therein for closing the circuit to the motor when desired.

The hereinbefore described rotating tube with screw threads thereon, with its rotating contact and journal and its stationary contact and bearing and support structures, together with means for rotating such tube as desired, and also with means for conducting electrical currents to and through said tube comprise a part of this invention which functions usefully with other parts hereinafter described.

One method whereby the benefits of this invention may be attained could be achieved by connecting the conducting system **29, 28, 27, 25** and **31** to the same main transformer or electrical power source conventionally connected to the flexible conductor **11**, thereby causing a portion of the electrical power of the furnace to enter the electrode at its center, at the area of **29**, and generating heat in the central portion of the electrode *4b*.

Another arrangement of the invention is illustrated in FIG. 2, in which is seen a three-phase transformer with its low voltage windings **35** connected to the electrodes *4b* by the flexible cables **31**, the contacts **25** and **27**, and the tube assembly **28** and **29**. The high voltage windings **36** of the transformer are connected to capacitors **37** by conductors **38**.

Circuit breakers **39** are located in the circuit for connecting the high voltage windings **36** to the capacitors **37**, or disconnecting them therefrom, or for changing the amount of capacitance connected to the high voltage windings.

Although the purposes of the invention may be achieved by any one of several possible configurations of the windings of the transformer, a delta-delta arrangement is shown in FIG. 2 for simplicity. Conventional means is diagrammatically indicated at **40** for changing the number of turns of the high-voltage windings **36** whereby the ratio between the low-voltage and high-voltage windings of the transformer may be changed.

The interior of the tube **28** is kept supplied with carbon paste, which may be in the form of chunks as indicated at **41** in FIG. 1. The carbon paste descends in the tube by gravity, or by reason of a gas pressure which may be maintained above it, to completely fill the cavity left as the electrode *4b* is forced downward by the screw **29**.

OPERATION

In the operation of an electric furnace equipped with the self-baking electrodes embodying the invention, the cylindrical casing **3**, supported by the pressure clamps **14** and contact clamps **5**, is adjusted to the proper position in the furnace by the hydraulic cylinders **16** and **20**. Electric power is furnished to the cylindrical casing **3** through the contact clamps **5**, depending conductors **10**, conductor supports **9** and flexible cables **11** leading to the main power supply transformer (not shown).

The support tube **28** may be connected through the rotating contact and journal **27**, stationary contact and bearing **25** and flexible conductors **31** either with the main power supply transformer or with power factor correctional devices as diagrammatically shown in FIG. 2 and above described.

Carbon paste **4** is continually supplied to the interior of the cylinder **3** through the open upper end thereof and the same is heated by the electric current passed therethrough, becoming plastic and entirely filling the lower portion of the cylinder, as indicated at **4***a*, and then being baked or cured and becoming a hard carbon electrode, as indicated at **4***b*.

Whenever the lower portion of the hard carbon electrode **4***b* is sufficiently burned away, the motor **32** may be operated to rotate the tube **28** in proper direction so that the screw threads **29** thereon will force the electrode further down through the casing **3** into the furnace charge **1**.

Workmen are also continually supplying carbon paste to the interior of the tube **28** as indicated at **41**, and the same becomes plastic, as indicated at **41***a*, entirely filling the opening formed in the center of the hard carbon electrode **4***b* by the screw threaded lower end **29** of the tube **28**.

It will thus be seen that neither the metal cylindrical casing **3** nor the metal supporting tube **28** is fed into the furnace charge, only the hard carbon electrode **4***b* being slidably moved downward out of the lower end of the cylindrical casing **3** by rotation of the threaded lower end **29** of the tube **28**.

From the above it will be evident that the essential feature of the invention is the centrally located tubular support **28** terminating at its lower end in the coarse screw **29** embedded in the hardened portion **4***b* of the electrode, with means **32**, **33**, **34** for slowly turning the screw **29** so as to force the elctrode down as through the casing **3** as needed.

It will also be seen that until and unless the pressure clamp assembly **12** is released, the hard carbon electrode **4***b* is extruded from the bottom of the casing **3** by proper rotation of the screw **29**. It will also be evident that only if the feed screw **29** is rotated with the pressure clamp assembly **12** released, will the casing **3** be carried downward through the contact clamp **5** along with the electrode. This insures that the use of the casing **3** in the furnace charge may be limited to that amount inadvertently burned away at the point where the lower end thereof emerges from the bottom of the contact clamps **5**.

It will also be seen that, by reason of the transformer-capacitor combination of FIG. 2 connected to the tubular column **28**, very heavy electrical currents may be made to flow in the tubular column **28**, the screw **29** and the central portions of the electrode **4***b* immediately around and below the feed screw. The heating effect of these currents, together with the heat-conducting effect of the screw, is most beneficial to the proper curing of the electrode.

Furthermore, it should be understod that the tubular support column **28** and screw **29** may be fluid cooled or heated by any suitable liquid or gas to any necessary degree. The outer surface of the screw **29** should be kept at temperatures consistent with coking of the electrode, while the interior surface of the screw and tubular column should be kept at temperatures consistent with a plastic state of carbon paste.

It will further be obvious that by keeping the interior of the tube **28** supplied with carbon paste which descends by gravity, or by reason of a gas pressure maintained above, it will completely fill the cavity left as the electrode is forced downward by rotation of the screw, thus forming a solid, homogeneous carbon electrode which is inserted into the furnace charge without either an outside metal casing or interior metal reinforcing.

It will also be seen that a desirable feature of the invention is that the electrical currents associated with reactive-kilovolt-ampere component of the power may be kept from flowing through the main power supply transformer and the associated electrical equipment that conventionally supply electric power to the electrode by way of the flexible conductors indicated at **11**. Instead, the current associated with the reactive-kilovolt-ampere component of the power may be made to flow to power factor correctional devices independently connected to the electrode as shown in FIG. 2 and heretofore described.

It should be pointed out that although the principle of connecting power factor correctional equipment to the low-voltage structure of an electric furnace functions to assist in curing and hardening a self-baking electrode, it should be understood that this unique method of correcting power factor on an electric furnace is not limited to electric furnaces with self-baking electrodes. Power factor correctional equipment connected as above described and illustrated in FIG. 2 improves the operation of any electric furnace in that it relieves the main supply transformers and associated electrical equipment of a considerable part of the load, namely, that portion of the current associated with reactive power which is offset by action of circuit capacitance, as above described.

It should also be understood that although the arrangement described an illustrated herein shows dielectric or static capacitors as the power factor correctional equipment, this is by way of simplicity of disclosure only and other suitable power factor correctional devices such as rotary condensers or the like are equally useful for this purpose.

The benefits of the present invention may be realized without recourse to electrical apparatus of any description being connected to the centrally located tube **28** or feed screw **29**. In such case, the metal mass of the feed screw is so proportioned and its conductive-magnetic properties so arranged that it will be heated by internally circulating currents arising from and induced by electromagnetic induction from electrical currents flowing into the electrode by way of the contact clamps **4**. Such induction-heating effect may be clearly enhanced by constructing the feed screw of metal having magnetic properties.

We claim:

1. A self-baking electrode for electric arc furnaces comprising a vertically disposed metal casing, means for suspending the casing with its lower portion in a furnace and its lower end spaced above the furnace charge, a metal tube suspended concentrically through said casing, external screw threads on said tube, the upper end of the casing being open so that carbon paste may be placed therein, means for connecting the casing to a source of electrical power so that the carbon paste in the casing will first become plastic and then be baked into a hard carbon electrode, and means for rotating the tube so that the screw threads thereon will force the hard carbon electrode downward out of the tube and into the furnace charge.

2. A self-baking electrode as defined in claim **1** in which the upper end of the tube is open so that carbon paste may be placed therein, and in which the carbon paste in the tube becomes plastic and fills the cavity left in the center of the hard carbon electrode as it is forced downward by the screw.

3. A self-baking electrode as defined in claim **1** in which the lower screw threaded end of the tube extends downward below of the lower end of the casing and the upper end of the tube extends upward above the upper end of the casing.

4. A self-baking electrode as defined in claim **1** in which there is means for connecting the tube to a source of electric power.

5. A self-baking electrode as defined in claim **4** in which the casing and the tube are both connected to the same source of electric power.

6. A self-baking electrode as defined in claim **1** in which there is means for connecting the tube to power factor correctional equipment.

7. A self-baking electrode as defined in claim **1** in which a tube is connected to the low voltage windings of a transformer and the high voltage windings of the transformer are connected to power factor correctional equipment.

8. A self-baking electrode as define in claim **7** in which the power factor correctional equipment comprises capacitors.

9. A self-baking electrode as defined in claim **7** in which circuit breakers are located between the high voltage windings and the power factor correctional equipment.

10. A self-baking electrode as defined in claim **4** in which there is a rotating contact and journal fixed upon the exterior of the tube rotatably supported in a nonrotating contact and bearing.

11. A self-baking electrode as defined in claim **1** in which the means for connecting the casing to a source of electric power includes contact clamp means upon the exterior of the casing, a supporting structure from which the contact clamp means is suspended, pressure clamp means on the exterior of the casing and adjustably supported from said supporting structure, and means for adjustably supporting said supporting structure.

12. A self-baking electrode as defined in claim **11** including a horizontal support member in said supporting structure, a nonrotating contact and bearing mounted upon said horizontal support member, and a rotating contact and journal fixed upon the exterior of the tube and rotatably mounted in said monrotating contact and bearing.

13. A self-baking electrode as defined in claim **12** in which the means for rotating the tube includes a motor and gearing operatively connecting the motor and the tube.

14. A self-baking electrode as defined in claim **1** in which the walls of the tube comprise spaced shells having a space therebetween whereby the tube may be fluid temperature regulated.

References Cited

UNITED STATES PATENTS

1,596,902	8/1926	Taylor	13—14 X
2,458,272	1/1949	Jones	13—14
2,778,865	1/1957	Kongsgaarden	13—16
2,899,667	8/1959	Bredtschneider	13—9 X
3,268,633	8/1966	Jansen	264—27
3,286,003	11/1966	Bullough et al.	264—29
3,365,533	1/1968	Alexander	13—9 X

HIRAM B. GILSON, Primary Examiner

U.S. Cl. X.R.

13—18

United States Patent

[11] **3,595,977**

[72] Inventor **Bruno Orlando**
Milan, Italy
[21] Appl. No **859,428**
[22] Filed **Sept. 19, 1969**
[45] Patented **July 27, 1971**
[73] Assignee **Kinglor, Finanz-und Beratungsanstalt**
Eschen, Liechtenstein
[32] Priority **Nov. 28, 1968**
[33] **Switzerland**
[31] **17,784/68**

[54] **SELF-BAKING ELECTRODES FOR ELECTRIC ARC FURNACES**
4 Claims, 4 Drawing Figs.

[52] **U.S. Cl.** **13/18**
[51] **Int. Cl.** **H05b 7/06**
[50] **Field of Search** .... 13/18, 18 SOD

[56] **References Cited**

UNITED STATES PATENTS

2,666,087	1/1954	Johansson et al.	13/18 (SOD)
3,365,533	1/1968	Alexander	13/18 (SOD)

Primary Examiner—Bernard A. Gilheany
Assistant Examiner—R. N. Envall, Jr.
Attorney—Anderson, Luedeka, Fitch, Even and Tabin

ABSTRACT: A self-baking electrode of the Söderberg type for electric arc furnaces comprises an outer metal sleeve containing the electrode mixture and internal reinforcing members for the electrode mixture, said reinforcing or structural members being electrically insulated from the outer metallic sleeve. The internal wall of the sleeve preferably is provided with radial ribs extending the whole length of the sleeve and the reinforcing members are attached to the ribs by means of insulating strips.

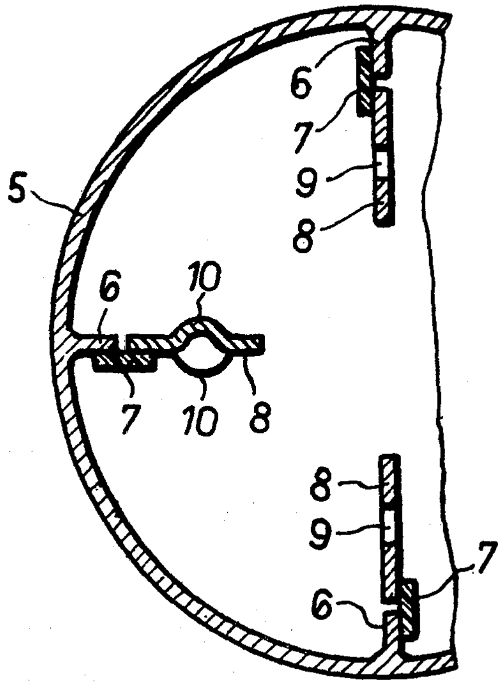

Fig. 1 PRIOR ART

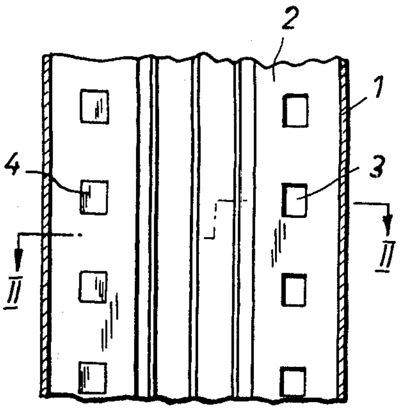

Fig. 3

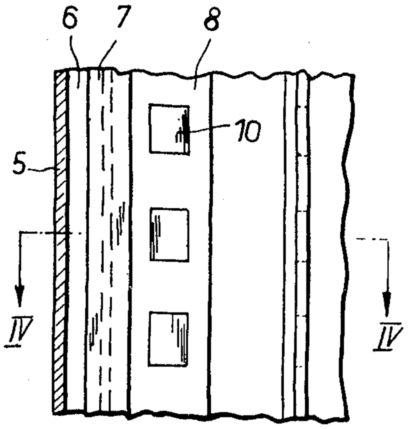

Fig. 2 PRIOR ART

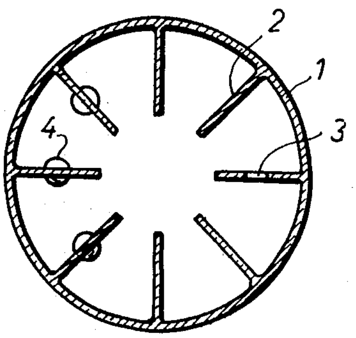

Fig. 4

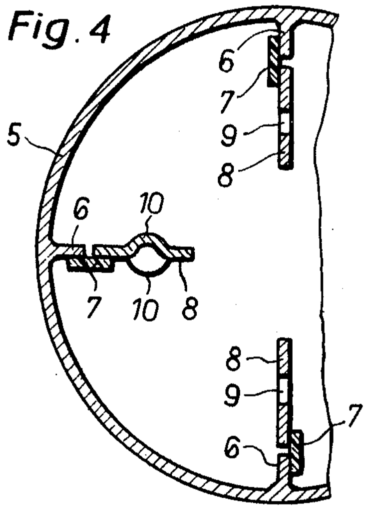

SELF-BAKING ELECTRODES FOR ELECTRIC ARC FURNACES

The present invention quite generally refers to an electrode and more specifically to a self-baking or Söderberg-type electrode for electric arc furnaces, particularly for submerged arc furnaces.

The known electrodes of the type referred to, particularly those for electric submerged arc furnaces for the production of ferroalloys, calcium carbide, silicon, electrofused oxides, typically consist of a metallic sleeve, such as a cylindrical sleeve, which is filled with a crude or green carbonaceous electrode mass. These electrodes are vertically positioned above the crucible of the furnace proper and their lower portions are exposed to the high temperature within the crucible. Because of this high temperature, the green electrode mass is subjected to a baking process which transforms said green mass into a solid carbonaceous body which is highly refractory and has a relatively high electrical conductivity. The baked portion of the electrode mass acquires the shape of the shell, whereas the latter is continuously melting away owing to the high temperatures in the baking region of the electrode.

In a self-baking electrode there are consequently, as seen from their bottom end upwardly, a solid portion with a relatively high electrical conductivity and having temperatures ranging between over 2,000° C. and about 800° C.; this solid portion being followed at its upper end by a baking zone in which the baking process is taking place, i.e. in which the electrode mass is semifluid and, therefore, a poor conductor, the temperatures in this baking zone ranging from approximately 800° C. to 300° C. In the zone above said baking zone there is a zone in which the electrode mass is fluid, said zone having temperatures ranging from about 300° C. to 100° C., and in which the electrode mass does not conduct electricity.

Finally, in the uppermost portion of the electrode there is a zone in which the electrode mass is particulate and has temperatures below about 100° C. and in which, of course, the electrode mass is not a conductor of electric energy.

The supply of electricity to the electrode is effected by metallic conductors such as bus bars which contact the electrode shell between the solid zone or portion and the baking zone of the electrode. These conductors generally consist of buses of copper or bronze having a large contact surface and are generally thoroughly cooled in order to withstand the high temperatures in this zone. Because of this thorough cooling of the buses and of their contact surfaces respectively, the electrode temperature in the contact zone is also limited, and consequently the baking zone of the electrode is prevented from passing the contact zone.

However, the metallic sleeve and the electrode mass being the only components of the electrode assembly, same has, therefore, to be reinforced inside the sleeve by supporting structural members. In fact, the weight of the solid baked portion of the electrode and of the electrode mass lying on it may not be totally supported by the buses and, if no other supporting means are provided, the solid portion and the electrode mass lying on it often fall by their own weight into the crucible of the furnace.

The present invention will be described hereinafter in connection with the accompanying drawing in which:

FIG. 1 is a partial sectional view taken axially along the length of a prior art electrode with the electrode mass having been omitted for the purpose of clarity;

FIG. 2 is a cross-sectional view taken along line II–II of FIG. 1;

FIG. 3 shows a partial sectional view taken axially along the length of an electrode, the electrode mass having been omitted for clarity, embodying the novel features of the invention; and

FIG. 4 is a cross-sectional view taken along the line IV–IV of FIG. 3.

According to a known practice, the supporting structural members inside the sleeve consist in metallic strips or vanes **2** which are welded to the inside wall of the sleeve **1** in radial position as shown in FIGS. **1** and **2** of the drawings. These strips or wings **2** comprise openings **3** or beads **4** for anchoring the baked electrode mass. Therefore, the weight of the baked solid portion and of the electrode mass lying on it is supported by these strips or wings **2**, which transfer the weight to the metallic sleeve, which in turn is carried by suitable carrying or supporting means.

There are several patents describing particular designs of supporting structural members for self-baking electrodes. Some of these known designs are particularly adapted for electrodes for the production of aluminum: the electrode weight is carried by metal bars embedded in the electrode, said bars also serving to supply electric power. This known design is not suitable for self-baking electrodes for electric arc furnaces because of the different operating conditions (such as temperatures, stresses, density of electric current, power density) and also because electric arc furnaces usually operate on AC power and the length of the embedded bars would cause an undesired and harmful increase of electrode impedance.

Other known designs show particular shapes of the shell or of the structural members associated therewith, but these designs have other objects than those of the present invention.

During its operation in the furnace, the electrode is consumed, i.e. more specifically is consumed at its lowermost portion. It is therefore necessary to lower periodically the electrode relative to the buses to maintain the electrode length below the zone of contact of said buses. As stated above, the buses are connected to the electrodes between the baked zone (i.e. conducting zone) and baking zone (i.e. nonconducting zone) of the electrode mass. When the electrode is appreciably lowered relative to the buses to compensate for wear by consumption, it may occur that the lowered electrode mass is not yet a conductor or is a poor conductor. In such cases, the major portion of the power supplied to the electrode by the buses has to pass the metallic sleeve, from which it passes to the structural members (which constitute the supporting elements), and finally passes from the structural members to the baked zone of the electrode. If now the structural members do not have a sufficiently large cross-sectional area to support the high-current densities, they will become red hot because of the Joule effect, thus losing their mechanical strength and becoming unable to support any longer the electrode weight, and consequently causing breakage or failure of the electrode.

Failure of the type described is a frequent occurrence in the practical use of self-baking electrodes, because, in fact, the cross-sectional area of the structural members is not sufficient to support the electrode current. Typically, an electrode having an outside diameter of 1,000 mm. has a normal current loading of about 50,000 a., and the structural members, being usually made of steel by reason of mechanical stress, would have to be designed to have a total cross-sectional area of about 2,500 cm.^{2} if the were to safely support the nominal current loading, thus occupying about one-third of the whole electrode cross section.

In order to minimize the risk of electrode breakages of the type referred to, it is necessary to adjust the electrode length below the contact surface in very small steps, typically some centimeters at a time, in order to ensure that the lower part of the bus bars is always contacting part of the baked zone of the electrode.

Of course, such frequent and small adjustments are very detrimental to efficient operation of the furnace while they do not eliminate totally the risk of electrode breakage.

Moreover, it occurs frequently that the electrode is consumed rapidly which results in a too short overall electrode length for efficient furnace operation, while a length adjustment is not possible by the danger of electrode breakage as described above. In such cases, the lowermost tip of the electrode will be too far away from the crucible bottom, the current transferred thereto by the electrode decreases, thus causing a decrease of the production rate of the furnace.

It is, therefore, an object of the present invention to provide an electrode of the type referred to in which the drawbacks described are substantially eliminated.

With this and other objects in mind, the invention provides in a self-baking electrode for electric arc furnaces, particularly for submerged arc furnaces, said electrode having a metallic sleeve and internal structural member means affixed to said metallic sleeve, the improvement of an electric insulation means insulating the internal structural member means form the metallic sleeve.

In this way, the internal structural members support the weight of the baked portion of the electrode and of the electrode mass overlying it. These structural members being affixed to the sleeve transfer by the electric insulation means the electrode weight to the metallic shell as in the known electrodes, but the insulation means between the structural members and the sleeve prevents in any case the structural supporting member from being electrically overloaded and, consequently, from being overheated to such an extent so as to lose the mechanical characteristics.

In this way the danger of electrode breakage is completely eliminated.

When an electrode is adjusted in length for compensating its wear by consumption, it might occur that the power supplying bus bars are connected to a zone of the electrode which is still a poor electrical conductor: in this case, the internal structural members are not affected because they are protected by their electrical insulation. In the zone of the electrode having a poor electrical conductivity a higher voltage drop occurs than in other zones of the electrode, and, because of this voltage drop and of the current, a considerable quantity of heat is developed causing, in short time, this zone of the electrode contacted by the bus bars to be completely baked. This possibility of rapid baking allows for adjusting more frequently and by longer steps the electrode length and prevents, therefore, the risk of furnace operation with excessively short electrodes, thus allowing a furnace operation at higher power rating.

It has been found, by way of example, that applying the invention to electrodes having a diameter of about 1,000 mm. adjustments in length may be safely carried out twice as frequently and by twice the amount without any risk of electrode breakage.

Moreover, it has been found that with the inventive concept it is possible to considerably decrease (by about half with respect to the conventional electrodes) the total cross-sectional area of the internal structural members, such as of the strips constituting such members: this was to be expected because of the fact that in no case these structural members are subjected to the passage of electric current and are, therefore, in no case overheated to such an extent that their physical strength is diminished.

Accordingly, it has been found, for example, that in an electrode having a diameter of 1,000 mm. it is possible to reduce the number of radial strips forming the internal structural members from eight strips to four without incurring any risk of electrode breakage.

An embodiment illustrative for the invention is shown in FIGS. 3 and 4.

In FIGS. 3 and 4 the outer metallic sleeve is indicated by the numeral **5**. In the interior of sleeve **5** four radial ribs **6** (only three shown) are attached such as by welding the extend along the whole length of the sleeve **5**. To each of these ribs **6** there is affixed a strip **7** of an insulating material such as wood, cardboard, fiber or micanite. These strips may be affixed by any suitable means, such as by bonding with an adhesive.

To each of the strips **7** there is affixed another strip **8**, the strips **8** forming the internal structural members.

As in the conventional electrodes, the strips **8** have formed therein apertures **9** (FIG. 4) or beads **10** which serve as anchoring means of the strips **8** in the carbonaceous electrode mass (not shown).

It is understood that instead of four ribs **6** and four strips **8** there may be provided a higher or lower number according to the internal size of the sleeve and/or according to the physical strength of the insulating strips **7** and of the adhesive joints.

Moreover, each of the strips **8** may be affixed to the ribs by means of a pair of insulating strips **7** bonded or glued to either side of the strips **8** and of the ribs **6**. The strips **8** may be fastened to the sleeve **5** by means of the profile, such as a T-profile of an electrically insulating material.

Finally, the internal structural members need not necessarily be in the form of s strips **8** as shown. The internal structural members may be formed by a wire mesh either shaped as lengthwise-running ribbons or as concentric inner tube connected with and insulated by any suitable means to the outer metallic sleeve.

What I claim is:

1. A self-baking electrode for electric furnaces comprising a metallic outer sleeve containing an electrode mixture, structural members within said sleeve, and insulating means secured to the inner side of said sleeve and to said structural members for electrically insulating said members from said sleeve.

2. The electrode of claim **1** in which the internal structural members are affixed along their whole length to the outer metallic sleeve.

3. The electrode of claim **2** in which the internal structural members are formed of metallic strips, said strips being disposed inside said sleeve, said insulating means comprises strips of an insulating material and in which said metallic strips are affixed to the outer sleeve by means of said strips of an electrically insulating material.

4. The electrode of claim **3** in which the outer metallic sleeve is a cylinder or prismatic tube carrying said metallic strips, said metallic strips being disposed radially and having affixed thereto said strips of electrically insulating material.

UNITED STATES PATENT OFFICE
CERTIFICATE OF CORRECTION

Patent No. 3,595,977 Dated July 27, 1971

Inventor(s) Bruno Orlando

It is certified that error appears in the above-identified patent and that said Letters Patent are hereby corrected as shown below:

Column 2, line 55 - "50,000 a.," should be --50,000 Amps,--
Column 2, line 59 - "if the were" should be --if they were--.
Column 3, line 12 - "form" should be --from--.
Column 4, line 9 - "welding the extend" should be --welding and extend--.
Column 4, line 27 - "of the profile" should be --of a profile--.
Column 4, line 30 - "of s strips" should be --of strips--.
Column 4, line 52 - Claim 4 - "cylinder" should be --cylindrical--.

Signed and sealed this 7th day of March 1972.

(SEAL)
Attest:

EDWARD M.FLETCHER,JR.
Attesting Officer

ROBERT GOTTSCHALK
Commissioner of Patents

United States Patent

[11] **3,622,141**

[72] Inventor **Ugo Brusa**
via Borgnia 9, Domodossola, Italy
[21] Appl. No. **768,099**
[22] Filed **Oct. 16, 1968**
[45] Patented **Nov. 23, 1971**
[32] Priority **Nov. 3, 1967**
[33] **Italy**
[31] **53593 A/67**

[54] **CONTINUOUS METAL MELTING METHOD AND FURNACE THEREFOR**
3 Claims, 3 Drawing Figs.

[52] **U.S. Cl.** .... **266/33 S,** 13/9
[51] **Int. Cl.** **C21b 11/10**
[50] **Field of Search** .... 13/9, 14; 266/33 S, 33; 264/10

[56] **References Cited**

UNITED STATES PATENTS

1,747,756	2/1930	Curtis	13/9
1,934,634	11/1933	Wiles	13/9
1,946,252	2/1934	Wiles	13/9 X
2,106,022	1/1938	Seil	13/14 X
2,624,565	1/1953	Kompart	266/33

Primary Examiner—Donald R. Schran
Attorney—Clario Ceccon

ABSTRACT: The arc melting process uses no electrode for the melting operation and continuously melts bulks of scrap metal which have been previously preheated, compressed and fed into a furnace by opposing ends simultaneously.

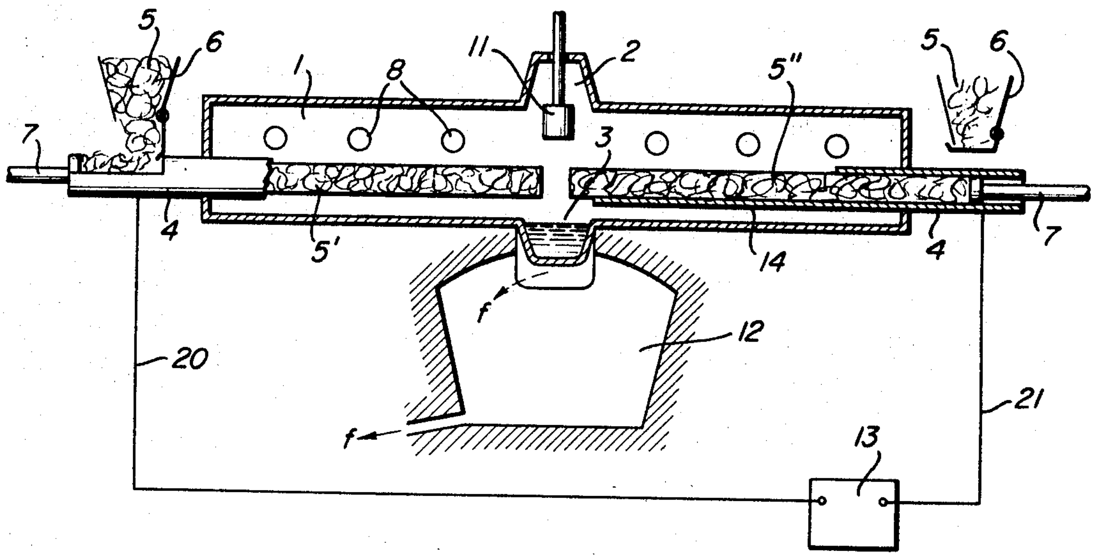

FIG. 1

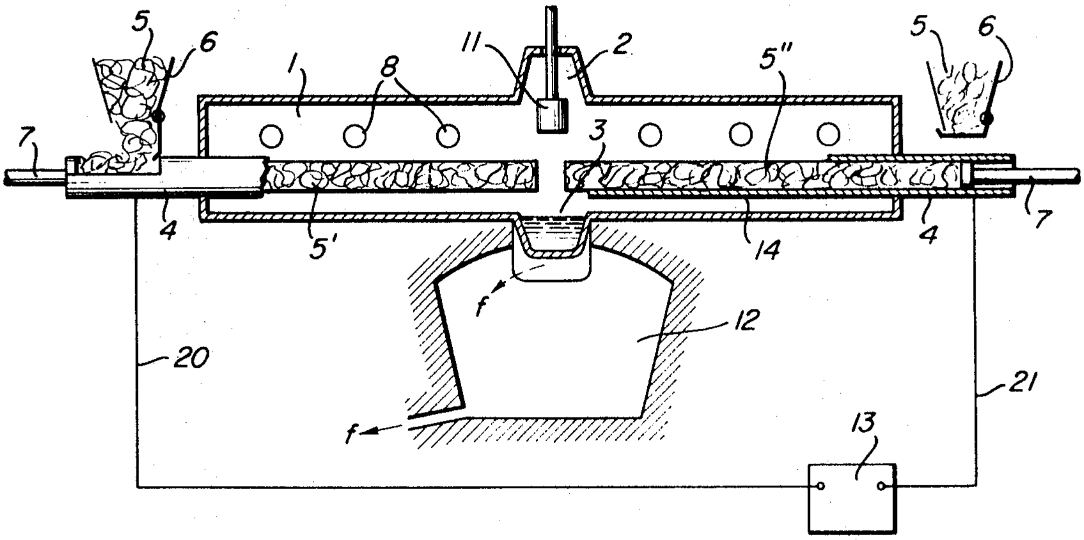

FIG. 2

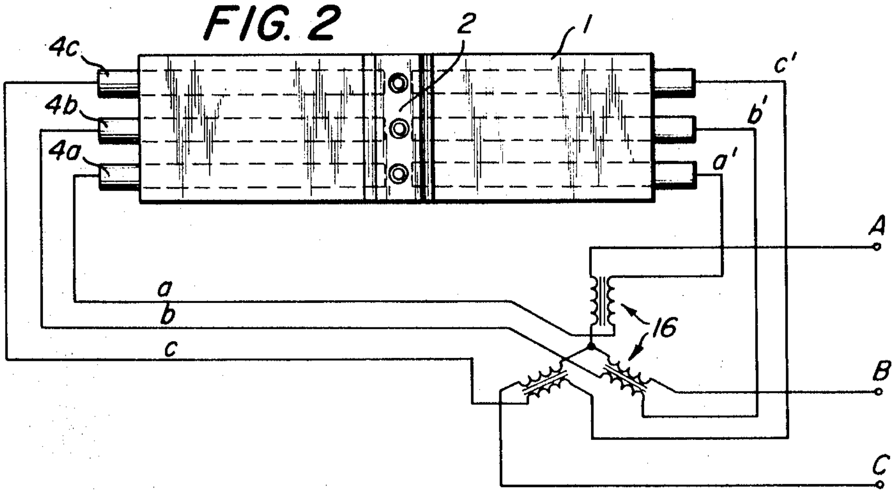

FIG. 3

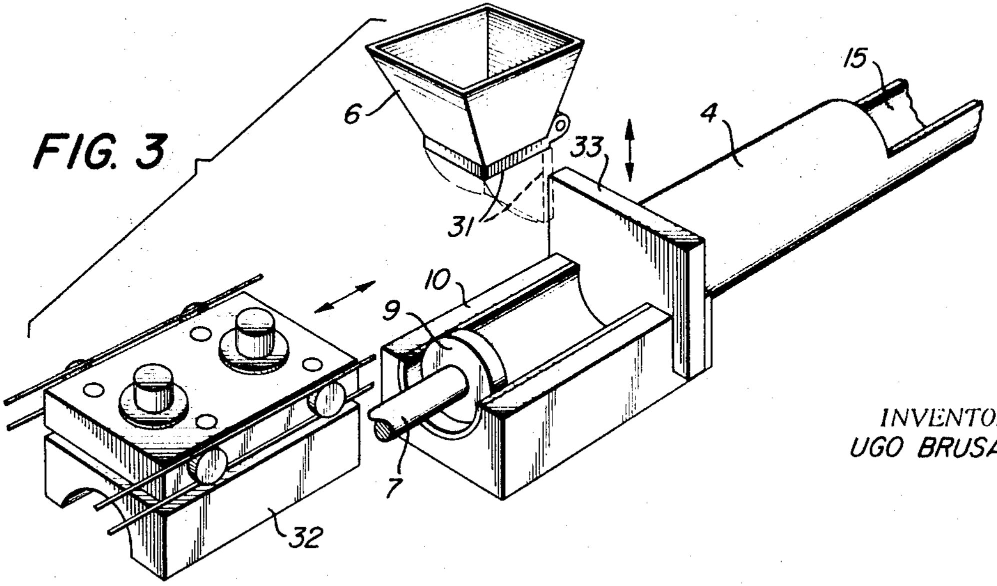

INVENTOR.
UGO BRUSA

CONTINUOUS METAL MELTING METHOD AND FURNACE THEREFOR

This invention relates to a metallurgical method for steel melting and to an electrical furnace which utilizes said method.

According to known metallurgical techniques, the steel is produced in electric arc furnaces wherein unheated scrap iron is intermittently and subsequently heated up to its melting temperature by an electric arc which is struck and maintained between special electrodes made of carbonaceous material.

This method, widely employed, has the disadvantage of being considerably expensive due to the substantial use of electric current for melting the scrap iron, the considerable thermic losses through the large apertures where the furnace is open to the atmosphere and, finally the consumption and wear of electrodes, all of which factors affect considerably the production cost.

Furthermore, the known furnaces are usually of complex and expensive construction construction mainly because they require tilting means.

The consumption of electrical energy may be reduced by the provision of a nonelectric preheating of the scrap, such as for instance by using fuel oil of gas burners but, heretofore, no practical remarkable result has been obtained in this way due to the fact that, in order to obtain tangible savings, said preheating must reach at least several hundred degrees Centigrade. Serious problems arise in the handling of the scrap, with ensuing thermic losses during the operation of charging the scrap to the electric furnace.

The present invention obviates the above disadvantages by using a melting method for scrap steel which permits the elimination of the carbonaceous electrodes, the continuous charging of the scrap to the electric furnace after a preheating thereof with burners to more than 1,000° C., and the drawing off continuously of the molten metal without moving the furnace.

Briefly stated, the method according to the invention comprises the compression of the scrap steel to form at least two packs having an elongated shape and a substantially constant cross section, the feeding of said two packs toward one another with a continuous movement, the preheating thereof with gas or oil burners to about 1,000°–1,200° C., the striking and maintaining of an electric arc between the facing extremities of said packs to obtain their fusion and the collection and conveyance by gravity into a special container of the molten metal so obtained.

The invention is also concerned with an electric arc furnace without electrodes, suitable to carry out the method briefly described above.

In a first embodiment of the invention the furnace comprises an elongate chamber, having a substantially circular cross section, hermetically sealed and thermally insulated, The chamber has at its two extremities two cylindrical throats extending within the chamber to form a pair of saddles or semicylindrical guides intended for the guided compression of the scrap, and two reciprocating compressing pistons movable within the throats for the compaction of the scrap. The central section of the chamber is provided at its bottom with a collector channel for the molten metal and, at its upper part, with a carbon electrode which may be displaced vertically.

In a second embodiment, the chamber is provided with three cylindrical throats, similar to those described above. At the ends of each throat there occurs the compression of the scrap, the introduction thereof into the furnace, the feeding of the compressed scrap packs being effected independently for each of the three throats of the same chamber end.

For a better understanding of the invention reference is made to the accompanying drawings in which:

FIG. 1 is a schematic elevation view with partial section of an electrical furnace using a single-phase electrical feeding;

FIG. 2 is a schematic plan view of a three-phase furnace and the feeding electrical circuit;

FIG. 3 is an exploded perspective view of a detail of FIGS. 1 and 2.

Referring to FIG. 1, the electric furnace according to the invention is substantially formed by an elongated chamber 1 having a substantially circular cross section, which is stationary, hermetically sealed and thermally insulated; chamber 1 has at its ends two cylindrical steel throats or tubes 4, which extend outwardly from the chamber for a considerable length and extend inwardly within the chamber as saddles or semicylindrical guides 14. Said cylindrical throats 4 within which may slide a piston 7, are open on the upper part at their ends and are in communication with hoppers 6 which are provided with a mobile bottom 31 to discharge the scrap metal 5.

The central section of chamber 1 presents an upper bell-shaped part 2 wherein an electrode 11 may move vertically, and a bottom transversal sloping recess or channel 3 to collect and convey the molten metal. A number of burners 8 is represented along chamber 1.

An electrical source 13 is electrically connected by means of conductors 20 and 21 to cylindrical throats 4. Furthermore, a vat or collecting chamber 12 for the molten metal and a pair of cylindrical, compressed scrap metal packs 5' and 5'' complete the device illustrated.

The operation of the described electric arc furnace is as follows:

Scrap material 5 is charged in bulk to a hopper 6 and, when the bottom door 31 of the hopper is opened, the scrap falls unto the cylindrical throat end 4 which is provided with an upper semicylindrical overturning cover 32. Then, the cover is closed and piston 7, hydraulically actuated, compresses the scrap within tube 4 against a retaining means such as a metal diaphragm 33. When piston 7 has achieved the compression of the scrap, the diaphragm is removed and the piston pushes toward the center of the furnace the compressed scrap 5' upon guides 14 and then moves back; the upper cover 32 of the throat is again opened and another amount of scrap is allowed to fall in bulk within tube 4.

The same occurs in the cylindrical throat located at the opposite extremity of chamber 1. Two cylindrical packs 5' and 5'' of compressed scrap are thus obtained which are pushed towards the central section of chamber 1, sliding on saddle guides 14 formed by the extension of the cylindrical throats 4. While traveling towards the central section of chamber 1, the compressed bulks 5' and 5'' are heated by the burners 8. When the ends of the two packs 5' and 5'' are almost in contact with one another, the electric arc furnace is ready to initiate the melting operation. The electrode 11 is lowered and voltage is applied to the two scrap packs by means of electrical connections 20, 21 and tubes 4. When the arc is struck, the electrode 11 is again raised and the arc is maintained, by the surrounding ionized air, between the ends of the packs 5' and 5''. Due to the heat of the arc, the scrap which was already heated to more than 1,000° C., is further heated and melts, and drops in channel 3 whence it passes by gravity into the collecting vat 12 where it may be drawn off by known means. The molten metal path is shown by the arrows f, f'. The cylindrical packs 5' and 5'' are continuously consumed but the distance between their opposite facing ends remains substantially constant due to compressing of material at the inlet ends and by the continuous feeding of new scrap packs.

In this way, a practically continuous charging of scrap is obtained and molten metal may be drawn off from the collecting vat 12. Input tube 4 may extend for a considerable length within chamber 1 in order to reduce the surface oxidation of the material protecting it against a too direct action of burners 8.

Current is carried by shells 4, 14 against which the material is pressed and this presents a further advantage in that it avoids local welding effects between the scrap and slide guides 14. The carbon electrode 11 is used only sparingly for striking the arc, and hence its consumption is reduced considerably.

In a modification of the furnace described hereabove, electrode 11 is not necessary, and arc striking between the ends of the two scrap packs may be obtained for instance by introducing ionized air in that central region. The furnace described may operate either with direct current or alternate single-phase current.

For considerably large installations, a three-phase electrical feeding, as shown in FIG. 2, may advantageously be used. In that case, the furnace is provided, within a single chamber **1**, with three distinct pairs of compression and guide elements for the scrap, shown respectively at **4***a*, **4***b* and **4***c*. Each pair is fed through electrical leads *aa'*, *bb'*, *cc'*, by three separate secondary windings of a transformer **16** having a three-phase primary winding ABC.

In FIG. **3** there is shown in greater detail one of cylindrical throats or tubes **4** to compress and advance the scrap. A piston **7** is shown which is slidably fitted within the tube and comprises a compressing disk or head **9**. Numeral **10** indicates the mobile cover of the extremity wherein the scrap is charged in bulk and **15** is the saddle guide which extends within chamber **1**. Tube **4** has been represented as having a circular cross section but its cross section may be trapezoidal or rectangular or the like depending on the convenience of construction.

In another modification, channels **14** have their axes inclined downwardly to facilitate the gravity feeding of scrap along them.

The invention has been described with reference to several particular embodiments, all of which show the following inventive features:

The scrap is introduced into the furnace after a preheating at a temperature of about 1,000° C.;

The scrap is compressed in alignment with the furnace throat and then pushed into the feed channel, provided with heating means;

The scrap is fed into the furnace in a substantially continuous manner; and

The scrap is melted by means of an electric arch which is obtained between two scrap bulks, without the need of an electrode.

What I claim is:

1. Electric arc furnace for melting of scrap metal which comprises an elongated chamber having substantially a cylindrical shape, hermetically sealed and electrically insulated, having at each of its two ends at least one cylindrical throat with a semicylindrical guide portion made of steel and extending within said chamber as a saddle, a diaphragm positioned transversely in said throat, a compressing reciprocating piston mounted within each of said throats for compacting the scrap against said diaphragm and feeding said scrap towards said chamber, preheating means for said scrap metal internally of said chamber and externally of said throat, said preheating means being located axially along said chamber, means for initiating an arc and a collection vessel for the molten metal.

2. Electric furnace, according to claim **1**, wherein said cylindrical throats extend considerably within said chamber to protect the compressed scrap from the direct action of said preheating means.

3. Electric furnace, according to claim **1**, wherein the outer ends of said cylindrical throats are provided with overturnable lids which when in open position allow the charging of said scrap metal into the throats and, when in closed position allow the compression of said scrap by said reciprocating pistons.

* * * * *

United States Patent [19]
Persson

[11] **3,715,439**
[45] **Feb. 6, 1973**

[54] ELECTRIC SMELTING FURNACE ELECTRODE HAVING A WOODEN CORE

[75] Inventor: **John A. Persson**, Gibsonia, Pa.
[73] Assignee: **Pennsylvania Engineering Corporation**
[22] Filed: **Aug. 27, 1971**
[21] Appl. No.: **175,496**

[52] **U.S. Cl.** 13/18
[51] **Int. Cl.** H05b 7/06
[58] **Field of Search** .....13/18, 185 OD

[56] **References Cited**

UNITED STATES PATENTS

1,150,021	8/1915	Favier	13/18
2,603,669	7/1952	Chappell	13/18

Primary Examiner—Roy N. Envall, Jr.
Attorney—Wiviott & Hohenfeldt

[57] **ABSTRACT**

One or more wooden logs are introduced into the central region of smelting furnace electrodes as they are being formed of paste to produce an electrode that has a non-conductive center and an outer conducting sheath of baked and hardened carbonaceous material.

7 Claims, 5 Drawing Figures

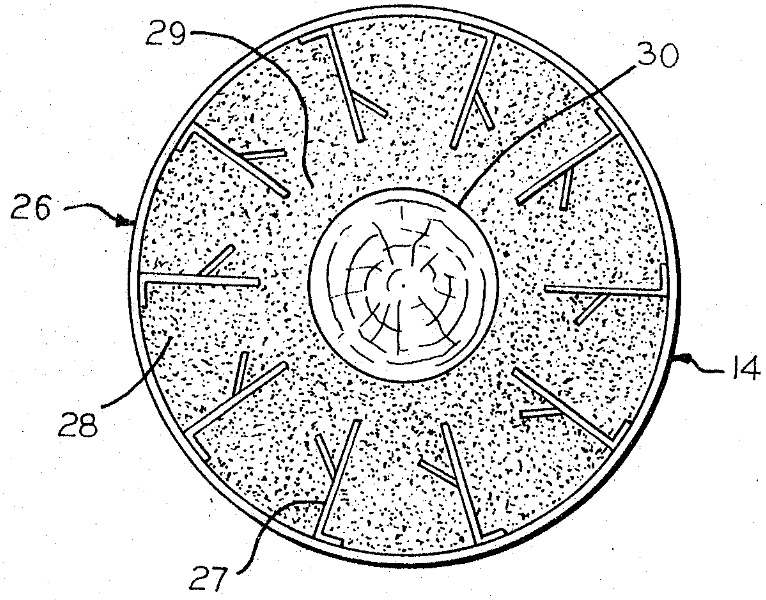

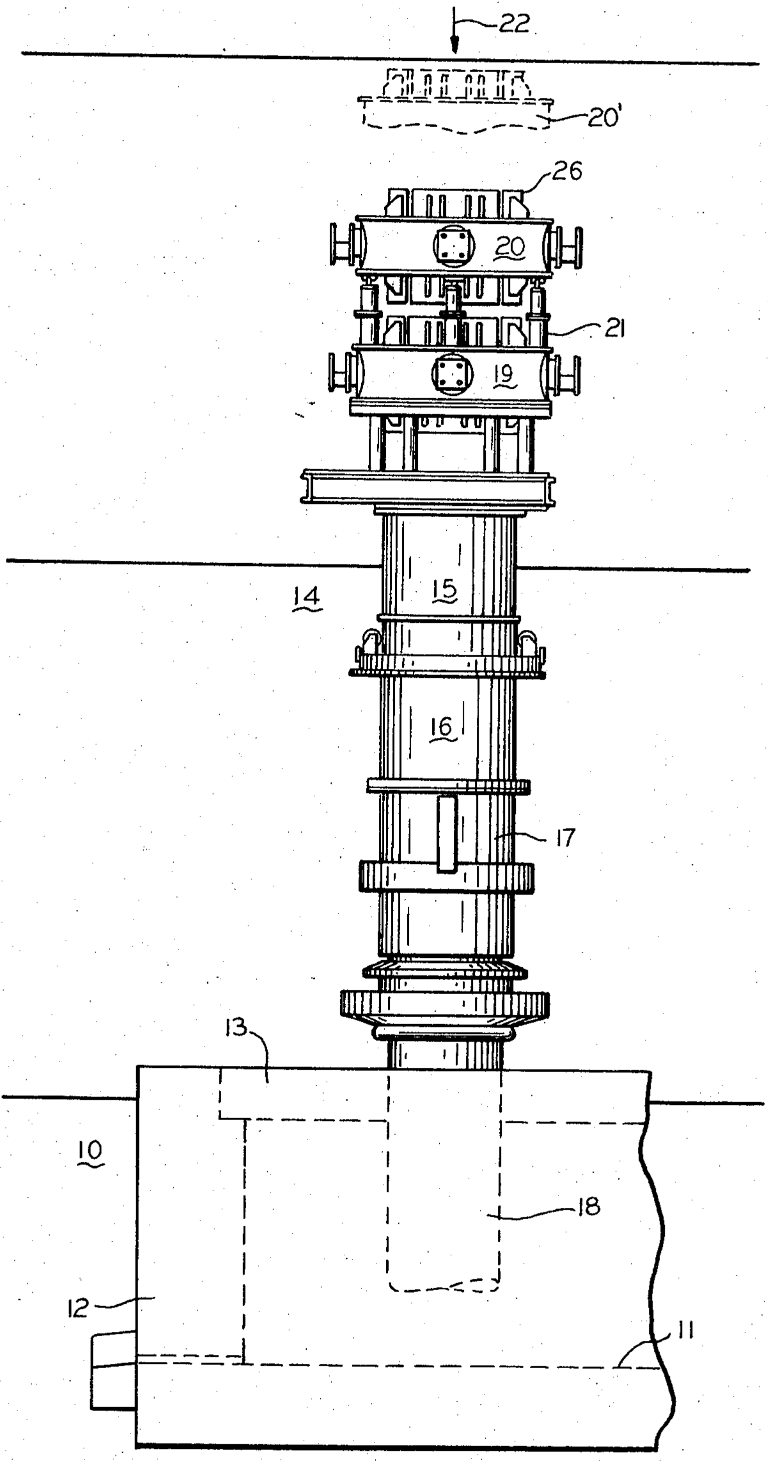

FIG.1

INVENTOR
JOHN A. PERSSON

BY

ATTORNEYS

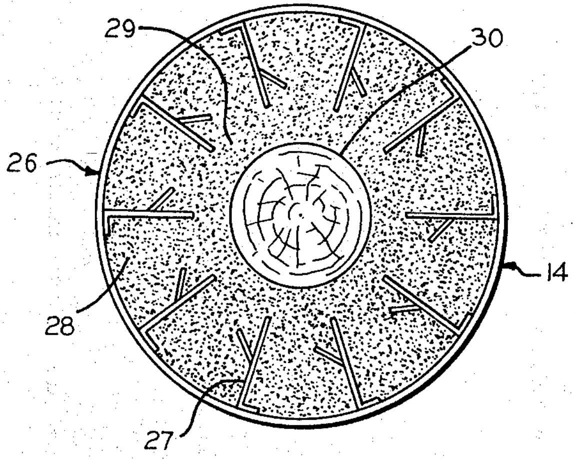

FIG. 2

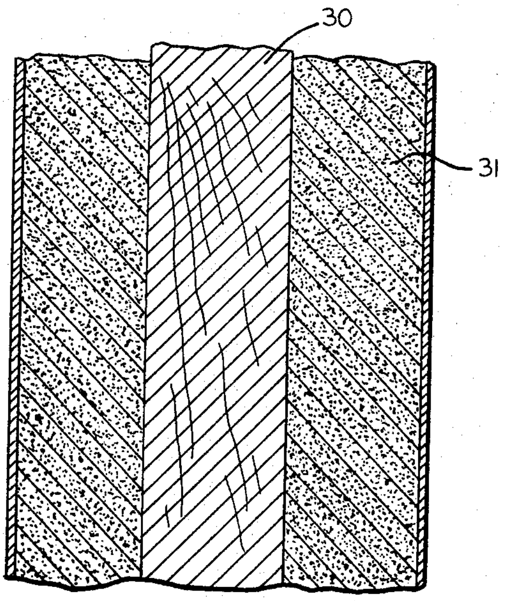

FIG. 3

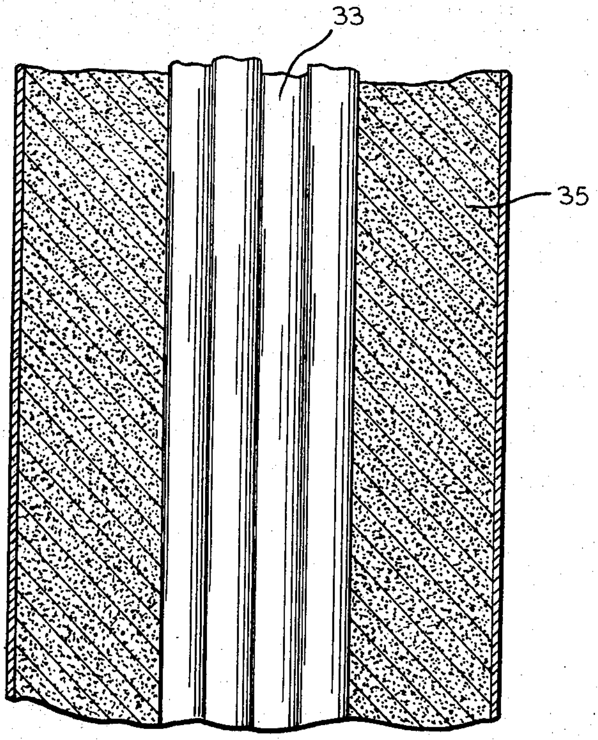

FIG. 4

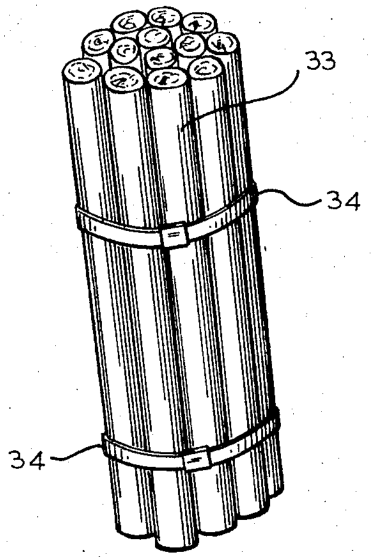

FIG. 5

INVENTOR
JOHN A. PERSSON

BY

Wiviott & Hohenfeldt
ATTORNEYS

ELECTRIC SMELTING FURNACE ELECTRODE HAVING A WOODEN CORE

BACKGROUND OF THE INVENTION

One of the major disadvantages of large diameter self-baking electrodes which carry heavy alternating currents is that most of the current is conducted in the peripheral layer owing to the so-called skin effect which is inherent in alternating current conductors. The central region or core of an electrode conducts little current, if any. Nevertheless, it had been the custom to make the central region of both prebaked and self-baking electrodes of the same quality paste as that used in the outer more conductive peripheral layer. This is an obviously inefficient use of the costly electrode forming paste.

The amount of electrode material consumed in an electric furnace represents a significant portion of the cost of making a ton of steel. A skilled furnace designer will design a furnace system to minimize electrode consumption or, at least, to minimize the total cost of the electrodes consumed. The least expensive electrode forming paste is that which has a high non-graphitic carbon content and, of course, the most expensive is that which has a high content of carbon which is in the more highly conductive and more thermally stable graphitic form. In any event, the least expensive grade of electrode material that will satisfy the operating conditions in the furnace reasonably well is usually chosen but in most cases it would be advantageous to use the material with high graphite content if it were not so expensive.

Presently, electrode pastes are made by calcining petroleum or asphalt cokes in either a fossil fuel fired kiln or an electric resistive heating furnace at below 1500° C. where graphitization transformation begins. This essentially ungraphitized comminuted calcined carbon is mixed with bonding materials such as pitch or tar in a heated state or is fed directly into the electrode columns. The least amount of bonding material is used so that the electrode has the highest carbon content possible consistent with strength.

In order to transform more of the carbon to graphite and thereby secure a higher quality paste, the calcining process must be carried out at temperatures well above 1500° C. for an extended period of time. Generally, high grade electrode pastes are made of electrically calcined anthracite which has been calcined in the temperature range where graphitization takes place. The large amount of electric energy used for obtaining graphitized carbon results in a costly paste but which has high electric conductivity and mechanical strength.

SUMMARY OF THE INVENTION

An object of the present invention is to reduce the cost of electrodes by filling their non-conductive center portions with rigid but non-conductive material such as wood logs.

Another object of this invention is to reduce the weight of electrodes without sacrificing strength or conductivity by substituting wood for higher cost paste in the center portion of the electrode.

How the foregoing and other more specific objects are achieved will appear from time to time throughout the course of a description of an illustrative embodiment of the invention which will be set forth hereinafter.

Briefly stated, the invention is most advantageously used in connection with self-baking electrodes. The electrode paste is fed into a casing which is supported above an electric furnace and is open at its upper end. The paste is usually in the form of solidified blocks which melt and eventually bake and solidify into a cylindrical form as the paste advances toward the hot furnace. In accordance with the invention, one or more cylindrical wooden logs are inserted axially into the open end of the casing so that the paste will fuse around the logs and form an outer conductive sheath. The wood chars as it nears the furnace and reduces the overall weight of the electrode because the density of the wood after it has become charred is less than that of the baked paste. Thermal cracking of the hydrocarbons provides additional carbon in the interstices of the already baked electrodes resulting in greater electric conductivity and compressive strength.

An embodiment of the invention will now be described in reference to the drawings.

DESCRIPTION OF THE DRAWINGS

FIG. 1 shows an elevation view of a self-baking electrode forming casing associated with a schematically represented fragment of an electric furnace;

FIG. 2 is a top view of the electrode forming casing shown in FIG. 1;

FIG. 3 is a vertical cross section of an electrode having a central region comprised of a single wooden log; and

FIG. 4 is a vertical cross section of an electrode having a central region comprised of several wooden logs;

FIG. 5 is a perspective view of a bundle of logs adapted for insertion in the electrode.

DESCRIPTION OF A PREFERRED EMBODIMENT

In FIG. 1 the schematically represented electric furnace is generally designated by the reference numeral **10**. The interior furnace bottom **11**, the side walls **12** and the top **13** were made out of the customary refractory materials.

One electrode forming device, generally designated by the numeral **14**, is shown associated with the furnace for the sake of illustrating the invention. This electrode forming device has been widely used and is sufficiently well known to obviate describing it in detail. However, the forming device has several coaxial cylindrical sections **15**, **16** and **17** in which the paste that is introduced at the top of the device becomes progressively hotter as it approaches the furnace and bakes out or solidifies. A solid cylindrical electrode **18** so formed extends into the furnace in a well known manner as shown.

At the top end of electrode forming device **14** are a pair of holding bands **19** and **20** which are coaxially arranged and interconnected with several hydraulic cylinders **21**. The clamps enable lowering of the electrode as it is consumed in the furnace. Clamp **20**, for example, opens and moves upwardly to its dotted line position **20'** while the electrode is held by its main clamp **19**. When clamp **20** has reached its uppermost position it closes and clamp **19** opens. Then the electrode is lowered by the hydraulic cylinder **21** and the holding clamp **19** closes after the slipping band has reached its original position. For present purposes, it is sufficient to observe that uncured blocks of paste are introduced into the top end of electrode forming device **14** and that a solidified baked electrode **18** emerges from the bottom. The hoist which handles the paste material at the upper end of forming device **14** is not shown because it is conventional. The same hoist may be used to handle and insert the wooden cores into the center of the electrode in accordance with the invention.

FIG. **2** shows a top view of the electrode forming device **14**. It comprises a hollow casing **26** from which a plurality of fins **27** project radially inwardly. By way of example, the radial dimension of these fins may be about 10 inches and their axial length may be about 6½ feet in a device that is adapted for forming electrodes having nominal 45 inch outside diameter. There may be 10 such fins equiangularly spaced which means that they would be about 36° apart. The blocks of uncured electrode paste are dropped into casing **26** in the interspaces **28** between successive fins **27**. As the paste material absorbs heat it melts and fills the existing cavities. Of course, as the paste progresses downwardly, it absorbs heat in which case the paste in annular region **29** and the fin interspaces **28** merge into a homogeneous viscous mass. In accordance with one aspect of the invention, a wooden log such as **30** is introduced through the top of casing **26** and blocks of paste are deposited around the log. The molten paste in the casing and the melting blocks of paste eventually encase the log. Thus, cylindrical wooden log **30** constitutes a core which fills a space that would normally be occupied by electrode paste. As the paste descends in electrode forming device **14**, additional blocks of paste and cylindrical wooden logs **30** are inserted as required to produce an electrode that has a substantially continuous central core surrounded by a sheath of carbonaceous electrode material.

The vertical sectional view of an electrode made in accordance with the new method may be seen in FIG. **3** which illustrates how the central wooden core **30** is surrounded by a homogeneous annular sheath of conductive paste which is marked **31**.

For a small size self-baking electrode, such as is shown in FIG. **3**, it is feasible to use single cylindrical wooden logs **30** because logs of adequate size are commercially available. For instance, in an electrode having an outside diameter of about 50 inches a central wooden core **30** of about twenty inches in diameter is satisfactory because that will leave a cylindrical sheath of conductive electrode material **31** about fifteen inches thick surrounding the wooden core **30**. A sheath of this thickness is adequate for carrying the electric current which ordinarily prevails in electrodes of this size regardless of the skin effect. Thus, in FIG. **3**, the finished electrode has a single wooden core **30** surrounded by an electrode sheath **31** whose thickness is about equal to the diameter of wooden core **30**.

For larger self-baking electrodes such as those having outside diameters of up to 75 inches a central wooden core having a diameter of about 40 inches may be used. This leaves a conductive paste annulus of about 17 inches in radial thickness which is adequate to conduct the maximum current in an electrode of this size. However, wooden logs having a diameter of about 40 inches are not readily available and, if they were, would be extremely expensive. Consequently, for large size electrodes, the use of a plurality of smaller diameter wooden logs is recommended. Thus, relatively low cost logs of smaller diameter, such as about 6 inches may be bundled or grouped as in FIG. **5** to produce a composite core which may be easily handled and inserted in the central region of the electrode. The short logs may also be introduced individually to form a group at the same level within the electrode forming device. FIG. **5** shows a bundle of logs **33**, which may or may not be of equal diameter, bound together with metal straps **34**. The lengths of the various logs need not be exactly the same. Bundles such as this are deposited endwise into the upper open end of electrode forming device **14** and consecutively to form a wooden core that is continuous over the length of the electrode. A fragmentary section of an electrode core formed with bundles of logs **33** is shown in FIG. **4** where one may also see that the logs are surrounded by a conductive sheath of electrode material **35**.

For the small size self-baking electrodes which are commonly used, that is, for electrodes which have an outside diameter of about four feet, the use of central wooden cores permits a saving of 15 percent or more of electrode forming paste. In large size electrodes, such as those having outside diameters of about 75 inches, a saving of electrode paste on the order of 30 percent can be obtained. The cost of the logs is very small compared with the cost of the electrode forming paste even if the largest size logs are used. However, considerable economy can be effected by using bundles of smaller logs or bundles of rectangular or square or otherwise cross sectionally shaped long wooden pieces in place of logs. The basic concept of the invention is fulfilled by using elongated wooden pieces singly or in bundles or groups as a core for an electrode made of carbonaceous paste which cases the core and bonds with it.

Those skilled in the art will appreciate that the principles of the invention may be applied to making prebaked electrodes as well as to self-baking electrodes and that in connection with making prebaked electrodes the wooden members may be inserted in the mole form concurrently with the introduction of melted electrode paste after which the pliable paste cylinder may be removed from the mold in the customary fashion and baked.

Although embodiments of the invention have been described in considerable detail, such description is to be considered illustrative rather than limiting, for the invention may be variously embodied and is to be limited only by interpretation of the claims which follow.

I claim:

1. In apparatus of the class wherein an electrode is formed in a casing having upper and lower end openings and which extends toward an electric arc furnace so that electrode paste introduced into the upper opening melts in a region intermediate the openings and bakes and cures to form hardened electrode material near the lower opening due to heat conducted from that portion of the electrode which emerges from said casing into said furnace, the combination with said electrode of a wooden core extending substantially centrally of said casing through said paste in the regions where said paste is introduced and where it is molten

and where it emerges from said casing and enters said furnace.

2. The invention set forth in claim 1 wherein:
   a. said wooden core is comprised of a series of single elongated wooden elements disposed axially of each other.

3. The invention set forth in claim 1 wherein:
   a. said wooden core is comprised of groups of wooden elements which groups are disposed axially of each other.

4. A method of forming a self-baking arc furnace electrode comprising:
   a. introducing unbaked electrode forming paste into the interior peripheral region of the upper end of an electrode forming device from whose lower end an electrode extends into a furnace, and
   b. inserting wooden elements axially of each other into the central region of the said upper end so that when the paste melts due to heat derived from the furnace said paste flows around each wooden element and encases it.

5. The method set forth in claim 4 wherein:
   a. said electrode is continuously advanced toward said furnace to absorb sufficient heat for charring said wooden elements consecutively before they enter the furnace.

6. The method set forth in claim 4 wherein:
   a. the wooden elements are substantially the same length and are inserted to form groups which are disposed in end-to-end fashion in the central region of the electrode.

7. The invention set forth in claim 4 wherein:
   a. the electrode forming paste is in the form of solid blocks when being introduced into the upper end of the electrode forming device.

* * * * *

117
226

United States Patent [19]

Fridman et al.

[11] **3,751,294**

[45] **Aug. 7, 1973**

[54] **BRUSHES FOR ELECTRICAL APPARATUS AND METHODS FOR THEIR MANUFACTURE**

[76] Inventors: **Georgy Nikolaevich Fridman,** Leninsky prospekt, 67, kv. 40; **Abram Samuilovich Fialkov,** Kutuzovsky prospekt, 17, kv. 95; **Yakov Gilievich Davidovich,** prospekt Mira, 190a, korp. 9, kv. 46; **Irina Dmitrievna Ivanova,** Polyarnaya ul., 6a, kv. 10, all of Moscow; **Ljudmila Petrovna Sysoeva,** Sadovy per., 3kv. 17, Elektrougli; **Abram Yakovlevich Gluskin,** ul. Scherbakovskaya, 58, kv. 18, Moscow; **Rimm Zigangirovich Galiskarov,** Rostokinsky proezd, 2/26, kv. 4, Moscow; **Esfir Lvovna Liberman,** Volgogradsky prosp., 10, kv. 17, Moscow; **Vera Stepanovna Pomortseva,** Svobodny prosp., 4, kv. 25, Moscow, all of U.S.S.R.

[22] Filed: **June 9, 1971**

[21] Appl. No.: **151,432**

Related U.S. Application Data

[63] Continuation-in-part of Ser. No. 749,390, Aug. 1, 1968, abandoned.

[52] U.S. Cl. **117/226,** 117/228, 117/168, 252/502, 252/511, 310/228, 310/251, 310/253

[51] **Int. Cl.** **B44d 1/02**

[58] **Field of Search** 117/228, 168, 226; 252/503, 506, 511; 310/228, 251, 253

[56] **References Cited**

UNITED STATES PATENTS

2,859,139	11/1958	Ramadanoff	117/228
2,783,405	2/1957	Atkins et al.	310/228
2,445,003	7/1948	Ramadanoff	252/503
2,881,100	4/1959	Hardman	117/228
2,559,077	7/1951	Johnson et al.	252/511 X

Primary Examiner—Edward G. Whitby
Attorney—Eric H. Waters, John G. Schwartz et al.

[57] **ABSTRACT**

This invention relates to brushes for electrical apparatus and to methods for manufacturing same.

Carbon and electrographitized brushes for electrical apparatus include, according to the invention, finely divided abrasive additions uniformly distributed throughout the whole volume of the brushes, mainly, in the form of silicon dioxide, and film-forming organic polymers, such as cobalt linoleate or polyimide resins, in a polymerized state.

The method for manufacturing said brushes consists in that brush blanks are subjected to combination treatment, for which purpose into the blanks are introduced uniformly throughout the whole volume thereof finely divided abrasive additions, mainly, in the form of silicon dioxide, whereupon the brush blanks are impregnated with solutions of film-forming organic polymers with subsequent thermal treatment until full polymerization of the impregnating composition.

4 Claims, 1 Drawing Figure

United States Patent [19]

Fridman et al.

[11] **3,751,294**

[45] **Aug. 7, 1973**

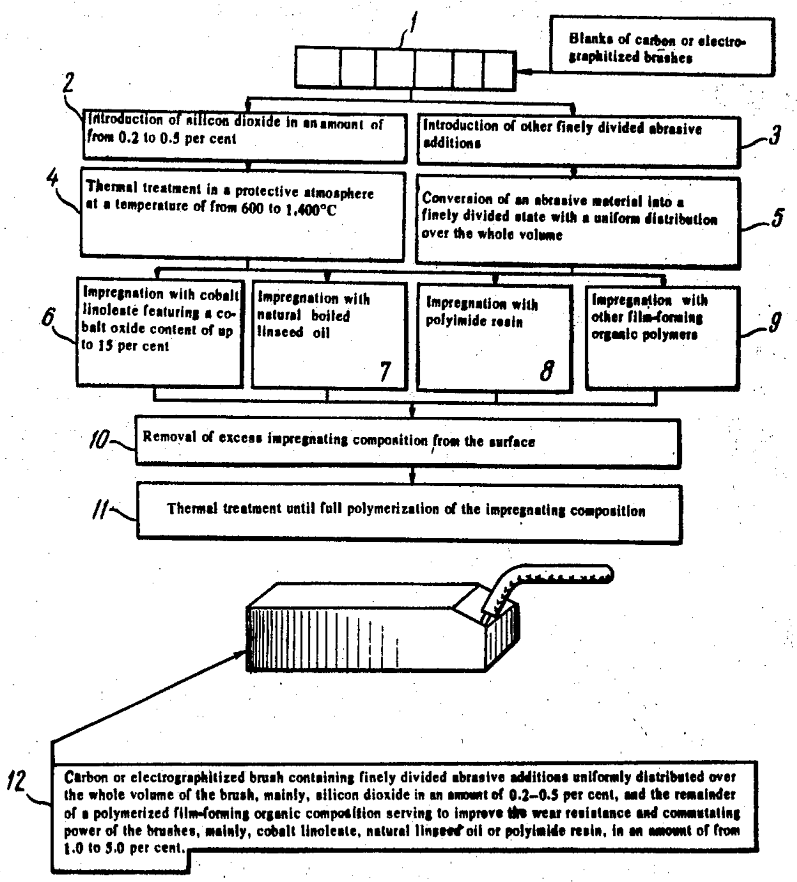

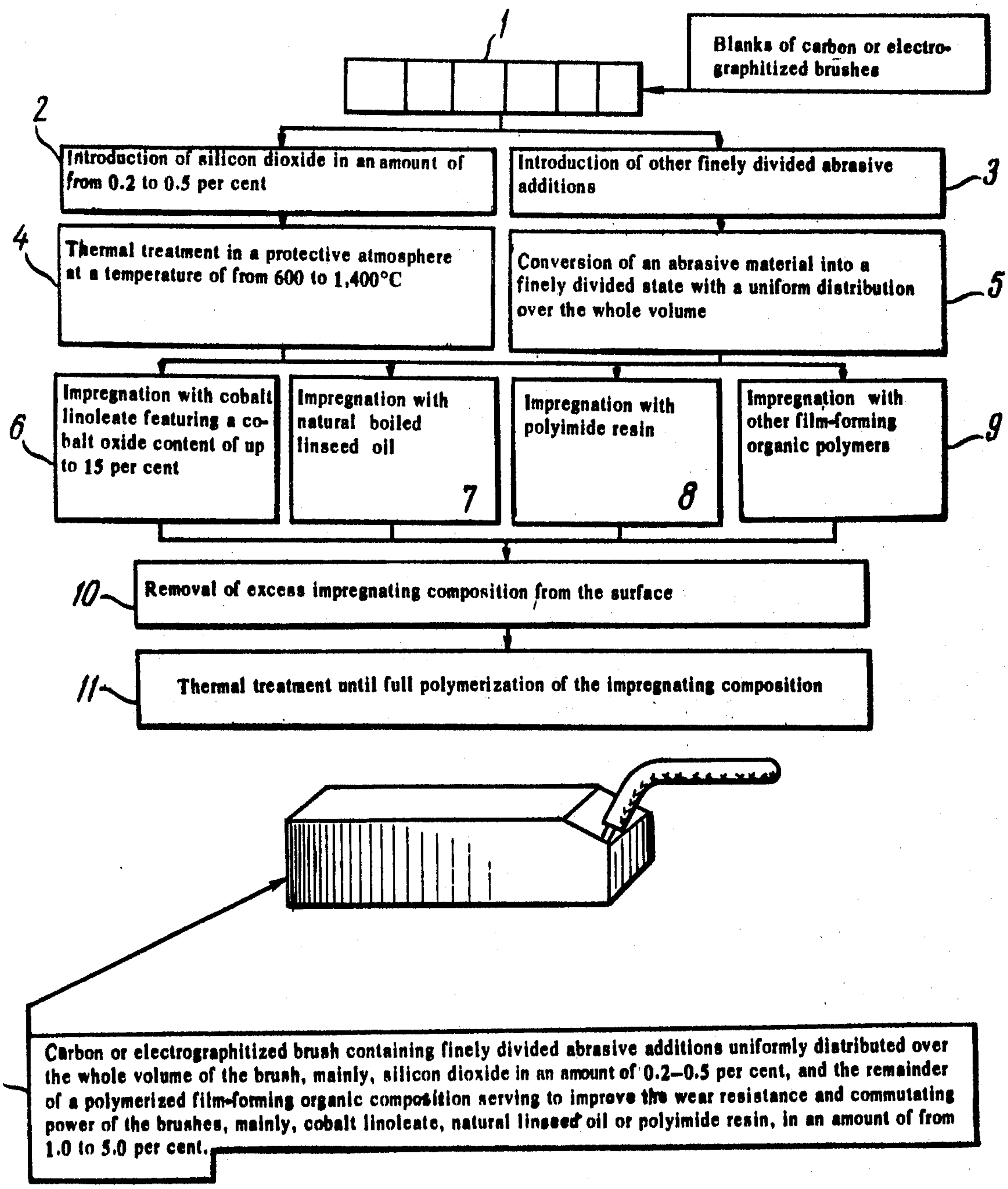
1
Blanks of carbon or electrographitized brushes
2
Introduction of silicon dioxide in an amount of from 0.2 to 0.5 per cent
Introduction of other finely divided abrasive additions
3
4
Thermal treatment in a protective atmosphere at a temperature of from 600 to 1,400°C
Conversion of an abrasive material into a finely divided state with a uniform distribution over the whole volume
5
6
Impregnation with cobalt linoleate featuring a cobalt oxide content of up to 15 per cent
Impregnation with natural boiled linseed oil
7
Impregnation with polyimide resin
8
Impregnation with other film-forming organic polymers
9
10
Removal of excess impregnating composition from the surface
11
Thermal treatment until full polymerization of the impregnating composition
Carbon or electrographitized brush containing finely divided abrasive additions uniformly distributed over the whole volume of the brush, mainly, silicon dioxide in an amount of 0.2–0.5 per cent, and the remainder of a polymerized film-forming organic composition serving to improve the wear resistance and commutating power of the brushes, mainly, cobalt linoleate, natural linseed oil or polyimide resin, in an amount of from 1.0 to 5.0 per cent.

BRUSHES FOR ELECTRICAL APPARATUS AND METHODS FOR THEIR MANUFACTURE

REFERENCES

This application is a continuation-in-part of U.S. Pat. application Ser. No. 749,390, filed on Aug. 1, 1968, now abandoned.

INTRODUCTION

The present invention relates to heavy-current electrical engineering and, more particularly, it relates to carbon and electrographitized brushes featuring high wear resistance and commutating power and designed for use in electrical machines operating under stressed commutating conditions, capable of operation both in a normal atmosphere and in an atomsphere containing volatile organosilicon compounds, as well as to a method of manufacturing said brushes.

STATE OF ART

Attempts at increasing the reliability and prolonging the service life of the electrical apparatus under heavy operating conditions, with a simultaneous reduction of their weight, have brought about the development and use in electromechanical engineering of heat-resistant insulation comprising organosilicon polymers (silicones).

However, as shown by the practice of manufacturing such apparatus, the organosilicon insulation featuring a number of valuable properties, when heated in the course of operation, evolves volatile compounds which affet adversely the sliding contact, this resulting in the disruption of the commutation and a marked increase in the wear of the brushes, especially so in closed electrical apparatus.

The development of special types of electrical brushes presented one of the solutions to this problem. In particular, it has been found that copper-containing brushes do not react to the presence of silicon vapors in the atmosphere.

However, such brushes feature a considerably decreased contact resistance and, therefore, are only suitable for use in apparatus with more favorable commutating conditions.

For use under stressed commutating conditions, it has been proposed to use carbon and electrographitized brushes without additions of copper and other metals, however, containing up to 1 percent silicon dioxide.

However, the introduction of silicon dioxide into brushes, whose protective action is based on the principle of fine polishing of the collector contact surfaces, hampers the formation thereon of a high-quality polish, which brings about a deterioration of the mechanical and electrical characteristics of the sliding contact.

Thus, while the silicon dioxide content in the brushes increases, their wear resistance likewise increases and reaches the maximum when the weight of the silicon dioxide addition is about 0.8 percent.

However, as the silicon dioxide content in the brush increases, in the course of the required high-temperature treatment, especially in the temperature range of from 1,400° to 1,600°C, there occurs a reaction of the formation in the brush of silicon carbides which have an adverse effect on the contact surface of the collector in the course of the brush operation.

In order to avoid the formation of silicon carbides, the thermal treatment of the brushes is carried out in a protective atmosphere and the maximum temperature is brought down to 1,400°C; nevertheless, even in case said conditions are observed, the presence in the brush of more than 0.5 percent silicon dioxide, although making for a longer service life of the brushes, causes at the same time an increased wear of the collector plates.

For example, in the materials submitted to the 3 rd Scientific U.S. Conference on Electric Insulation, held in Chicago in 1960, W.H.Fifer of the U.S. Bureau of Ship Building pointed out that, despite the progress made, in electrical apparatus featuring organosilicon insulation the reduction of the number of cases of insulation damages was counterbalanced by a certain increase in the brush wear. In units in which high resistance of major insulation should be maintained without inspection for a prolonged period of time no slight increase of the brush wear could be tolerated and, therefore, the use of any organo-silicon materials should be avoided.

There are known a number of impregnating compositions based on diverse organic materials and designed to improve the brush operation.

However, while increasing under normal conditions the wear resistance of the sliding contact, said compositions do not provide an adequately reliable operation of the brushes in an atmosphere containing silicon vapors.

For instance, one of the novel impregnating compounds based on diallyl phthalate and on allyl and diallyl alcohols, tested under normal conditions, made for the brush operation with a wear of no more than 0.3 mm per 100 hours, whereas in an atmosphere contaminated with silicon compounds the brushes tested on the same stands featured a wear of up to 0.5 mm per 100 hours, which means an increase of the wear by 1.67 times.

It is an object of the present invention to develop compositions and methods for manufacturing carbon and electrographitized brushes, that would make for an equally good operation of the brushes both in an atmosphere containing silicon vapors and under normal conditions, would cause no increased wear of the collectors and provide for a higher surface resistance of insulation of the electrical apparatus windings.

In the accomplishment of said object of the invention, in carbon and electrographitized brushes for electrical apparatus, according to the present invention, the material of the brushes contains finely divided abrasive conditions uniformly distributed throughout the whole volume thereof, mainly, in the form of silicon dioxide, and film-forming organic polymers, such as cobalt linoleate and polyimide resins, in a polymerized state, while the method of manufacturing the carbon and electrographitized brushes consists in that brush blanks are subjected to combination treatment, for which purpose there are introduced uniformly throughout the whole volume of the blanks finely divided abrasive additions, mainly, in the form of silicon dioxide, whereupon the brush blanks are impregnated with solutions of film-forming organic polymers with a subsequent thermal treatment until complete polymerization of the impregnating composition takes place.

The treatment of brushes provided by the present invention with said organic polymers incompatible with organosilicon polymers makes for imparting the following properties to the brushes.

1. Improvement of the sliding conditions of the brushes owing to the reduction of the friction coefficient and acceleration of the formation of a stable layer of polish on the collector.

2. Increased cementing of the brush material in the course of polymerization of the impregnating composition.

3. Reduction of the brush dust adhesion to the insulating surfaces inside the electrical apparatus.

4. Adequate thermal stability required to insure the preservation of properties imparted to the brush as a result of the combination treatment throughout the whole service life of the brush at the maximum permissible working temperatures.

The requirements set can be best met at prolonged temperatures of up to 150°C by organic film-forming compositions based on drying vegetable oils with the addition of metal oxides, that are capable of assuming current-conducting properties under the effect of electric current.

In the paint-and-varnish manufacture it has been well known to use vegetable oils with the addition of diverse siccatives such as metal oxides for a more rapid and complete drying.

For example, it has been known to use a combination siccative in the form of cobalt and lead naphthenates for the protection of carbon electrodes from destruction, which is well justified for the object set.

However, in accordance with the present invention, much better results are attained through the use of linoleates featuring an increased metal content, in particular, up to 15 percent cobalt oxide, as against the use of naphthenates.

Following the impregnation and thermal treatment, the remaining linoleate in the brush contains up to 30 percent oxygen, which has a favorable effect upon the formation on the collector of a stable layer of polish.

Of particular significance to the accomplishment of favorable resflts are both the choice of the impregnating composition and of correct concentration thereof for in the opposite case totally different properties may be attained. Thus, with an increase in the brush body after the polymerization of the amount of the impregnating composition left the commutating power of the brush features an initial marked increase whereupon it goes down rather rapidly and sparking occurs.

Prior to the beginning of sparking, the wear resistance increases monotonously.

Therefore, depending upon the operating conditions of the brushes, for each specific impregnating composition there exists a certain optimum value of its concentration in the brush, said optimum value being in the range of approximately 1.0 to 5.0 percent by weight of the brushes.

Also an essential distinguishing feature of the present invention is the impregnation with polyimide resins of the brushes designed for operation at temperatures of from 150° to 300°C.

The impregnation with these resins, in combination with abrasive additions, imparts valuable properties to the brushes analogous to those imparted as a result of impregnation with cobalt linoleate, however, unlike the latter, it also imparts to the brushes a high thermal stability owing to which the brushes can withstand prolonged working temperatures of up to 300°C and short-duration working temperatures of up to 400°–500°C.

For a better understanding of the present invention, several examples are presented hereinbelow with due reference to the accompanying drawing which illustrates diagrammatically the method of manufacturing brushes according to the invention, said examples being presented for the purpose of illustration and not by way of limitation.

EXAMPLE 1

Brushes for electrical apparatus with stressed commutating conditions, designed for operation in a normal atmosphere and in the presence of silicon vapors at a prolonged working temperature of the brushes up to 150°C.

Blanks of carbon and electrographitized brushes, in accordance with the appended drawing, are subjected to the following combination treatment.

The blanks are first dried at a temperature of 110°–120°C for 1.5-2 hours until a complete removal of moisture, whereupon they are cooled down to a temperature of 60°–70°C, at which temperature they are immersed, without the use of pressure or vacuum, in a bath containing polymethyl siloxane resin in a solution of toluene or ethyl Cellosolve.

The viscosity of the impregnating composition is selected depending upon the porosity of the brush blanks so that the increase in weight after the high-temperature treatment will be within the range of from 0.2 to 0.5 percent by weight of the blanks after moisture has been removed from the latter.

Thermal treatment is carried out in an argon or hydrogen atmosphere with a two- or three-stage temperature increase from 600° to 1,400°C, in the course of which finely divided silicon dioxide (SiO_2) is deposited uniformly throughout the whole volume of the blanks.

Secondary impregnation of the brush blanks, in accordance with the drawing, is carried out analogously with the initial one, but using cobalt linoleate obtained from linseed oil by the dry, fusion or deposition techniques, with the cobalt oxide content in the prepared linoleate of up to 15 percent by weight of the latter.

The impregnating composition is brought to working viscosity with the aid of wood turpentine preliminarily kept in the light in the open air for 1–2 days, with a view to obtaining after the subsequent secondary thermal treatment a gain in the weight of the brush blanks in the range of from two to five percent by weight after the primary thermal treatment.

The secondary thermal treatment, following the removal from the impregnated blanks of excess impregnating compound, is carried out in an atmosphere of air with a stepwise temperature increase of from 120° to 180°C until full polymerization of the impregnating composition.

The optimum content in the brushes of silicon dioxide and cobalt linoleate is determined for each new type of brushes from stand testings, in application to specific electrical apparatus.

EXAMPLE 2

Brushes for electrical apparatus with moderate commutating conditions, designed for operation in a normal atmosphere and in the presence of silicon vapors in said atmosphere, at a prolonged working temperature of the brushes up to 150°C.

The introduction into the brush blanks of abrasive additions does not differ from that described in Example 1.

The secondary impregnation in accordance with the drawing is effected analogously but with natural drying oil (boiled linseed oil) using a cobalt or some other siccative, dissolved to a working viscosity in wood turpentine, with a subseuqent thermal treatment as described in Example 1.

EXAMPLE 3

Brushes for electrical apparatus featuring prolonged working temperatures of from 150° to 300°C, designed for operation in a normal atmosphere and in the presence of silicon vapors in said atmosphere.

The primary impregnation and thermal treatment do not differ from those described in Examples 1 and 2.

The secondary impregnation, in accordance with the drawing, is effected with a solution of polyimide resin in dimethyl formamide, with a subsequent thermal treatment of the blanks at a smooth temperature increase of from 100° to 250°C, until complete polymerization of the impregnating composition.

As distinct from the preceding Examples, the impregnation with polyimide resin can be carried out in an autoclave, using vacuum and excessive pressure.

All variants of the brushes have been tested under laboratory conditions and in closed electrical apparatus with an output of from 1.0 to 9.000 kw, featuring organic and organosilicon insulation. The apparatus were tested on a stand under the hardest possible working conditions.

Presented hereinbelow by way of illustration are some characteristic data obtained from testing the most extensively used electrographitized types of brushes.

Table 1 contains the data on comparative tests of d.c. electrical apparatus with a collector peripheral speed of 20 m per sec., at an average current density in the brush of 10 amp. per sq.cm.

TABLE 1

Comparative testings of brushes in apparatus at a stand

No.	Type of brush	Quality of the brush operation Type of apparatus insulation			
		organosilicon		organic	
		wear, mm/ 1000 hr	commutation, conv. valve	wear, mm/ 1000 hr	commutation, conv. valve
1.	Electrographitized brushes, no additional treatment	15.5	4.0	3.0	10.0
2.	Variant 1, with the introduction of 0.8 per cent silicon dioxide	2.0	8.0	2.0	8.0
3.	Variant 1, impregnated with cobalt linoleate (4 per cent gain in weight)	4.5	7.0	2.0	10.0
4.	Variant 1, with the introduction of 0.5 per cent silicon dioxide and 4 per cent cobalt linoleate	1.0	10.0	1.0	10.0
5.	Variant 1, with the introduction of 0.5 per cent silicon dioxide and 4.0 per cent boiled linseed oil	1.3	8.0	1.3	8.0
6.	Variant 1, with the introduction of 0.5 per cent silicon dioxide and 2.0 per cent polyimide resin	1.4	9.0	1.4	9.0

Note: The conventional value of commutation was found from the width of the zone of sparkless operation in per cent from the rated current of load, in accordance with the method of Prof. V.T.Kasyanov, by magnetization of additional poles.

Table 2 presents the results of comparative testings of the main variants according to Table 4 (Variants 1, 2 and 4) under actual working conditions, the brushes being used in closed high-speed electrical apparatus with stressed commutating conditions, with the collector peripheral speed of 50 m per sec., average current density under the brushes of 10 amp. per.sq.cm, specific pressure of the springs of 30 gram-force per sq.cm, and the collector working temperature of 120°C.

TABLE 2

Testing the brushes in operation in closed electrical apparatus with organosilicon insulation

No. from Table 1	Type of brush	Average service life, in mm/1,000 hr	Total resistance of current-conducting parts of the apparatus, in megohms		
			initial	after 1,000 hr	after 2,000 hr
1.	Electrographitized brushes, without additional treatment	30.0	50.0	0.1	0.05
2.	Same, containing silicon dioxide	4.0	50.0	5.0	4.0
3.	Containing 0.5 per cent silicon dioxide and 4.0 per cent cobalt linoleate	2.5	50.0	25.0	20.0

Note: After cleaning the windings, the resistance of the apparatus insulation was restored to a value close to the initial one.

Laboratory investigations have also shown that the coefficient of friction of the brushes subjected to combination treatment is 1.4–1.6 times lower than that of the brushes containing only silicon dioxide, which makes for the reduction of mecanical friction losses during the sliding of the brushes on the collector and for an increase of the service life of the collector plates.

It is clear from the above-listed testing results that neither untreated brushes nor any of the afore-described ingredients introduced to the brush separately can fully solve the problem of normalizing the operation of the brush contact in an atomsphere containing silicon vapors.

The herein proposed treatment based on the effect of cumulative treatment with silicon dioxide and film-forming organic polymers helps fully eliminate the harmful effect of silicon vapors upon the sliding contact and makes for a rapid formation on the collector of a stable layer of polish acquiring a characteristic gloss. The brush dust from such brushes features reduced adhesion and adheres to the windings in a considerably lesser degree, which helps maintain the insulation resistance at a higher level in the course of operation, thus obviating the necessity of making regular stops for the purpose of cleaning the apparatus, even the high-voltage apparatus.

The wear resistance and commutating power of the brushes according to the present invention are in fact identical both in operation under normal atmospheric conditions and in the presence of silicon vapors in the atmosphere. Characteristics of the novel brushes proposed herein are superior to those of the brushes containing only silicon dioxide.

What is claimed is:

1. A method for manufacturing carbon and electrographitized brushes for electrical apparatus which com-

prises first impregnating a brush blank with a solution of an organosilicon resin in such an amount that after thermal treatment at 600° to 1400°C. the brush blank will contain, uniformly distributed over the entire volume thereof, finely divided silicon dioxide in an amount of 0.2 to 0.5 percent by weight of the blank, heating said impregnated blank at a temperature of 600° to 1400°C. until the blank contains said 0.2 to 0.5 percent be weight of finely divided silicon dioxide, secondly impregnating the blank with a solution of cobalt linoleate containing up to 15 percent by weight of cobalt oxide based on the weight of linoleate, in such an amount that after thermal treatment at 120° to 180°C. the secondly impregnated blank will contain 2.0 to 5.0 percent by weight of said second impregnating composition based on the weight of the blank, and heating said secondly impregnated blank to a temperature of 120° and 180°C. until complete polymerization of the second impregnating composition occurs.

2. A method for manufacturing carbon and electrographitized brushes for electrical apparatus which comprises distributing finely divided silicon dioxide throughout the entire volume of a brush blank, subsequently impregnating said blank with a solution of a film-forming organic polymer and subjecting said impregnated brush blank to thermal treatment until complete polymerization of the polymer is effected.

3. A method according to claim **2** wherein the thermal treatment takes place at 120° to 180°C. and the film forming polymer is natural boiled linseed oil in such an amount that after thermal treatment the blank will contain 2.0 to 5.0 percent by weight of polymerized linseed oil based on the weight of the blank.

4. A method according to claim **2** wherein the thermal treatment takes place at 100° to 250°C. and the film forming polymer is a polyimide resin in such an amount that after thermal treatment the blank will contain 1.0 to 4.0 percent by weight of polyimide resin based on the weight of the blank.

* * * * *

United States Patent [19]

Persson

[11] **3,819,841**

[45] **June 25, 1974**

[54] **IRON-FREE SELF-BRAKING ELECTRODE**

[75] Inventor: **John A. Persson**, Gibsonia, Pa.

[73] Assignee: **Pennsylvania Engineering Corporation**, Pittsburgh, Pa.

[22] Filed: **Aug. 6, 1973**

[21] Appl. No.: **385,825**

[52] **U.S. Cl.** **13/18,** 29/25.17
[51] **Int. Cl.** **H05b 7/06**
[58] **Field of Search** 13/18; 29/25.17

[56] **References Cited**

UNITED STATES PATENTS

1,498,582	6/1924	Soderberg	13/18
1,691,505	11/1928	Walther	13/18
3,619,465	11/1971	Cavigli	13/18

Primary Examiner—Roy N. Envall, Jr.
Attorney, Agent, or Firm—Fred Wiviott; Ralph G. Hohenfeldt

[57] **ABSTRACT**

A self-baking electrode for an electric furnace comprises a permanent tubular casing which extends beneath the furnace hood toward the furnace charge. A ram located over the top end of the casing can be retracted for inserting electrode paste and can be advanced for compacting the paste and extruding the baked portion of the electrode from the lower end of the casing. The lower end is articulated in a region which is engaged by electrode contact plates that exert a pressure on the casing and the baked electrode to permit extrusion at a controlled rate. The casing is surrounded by a mantle which is insulated and defines an annular gap around the casing. Hot gas is forced axially through the gap of the casing to melt and precure the electrode paste prior to the paste passing through the region of exit and electrode contact. The usual apparatus for advancing and retracting the whole electrode forming apparatus and electrode with respect to the furnace charge is also provided.

29 Claims, 4 Drawing Figures

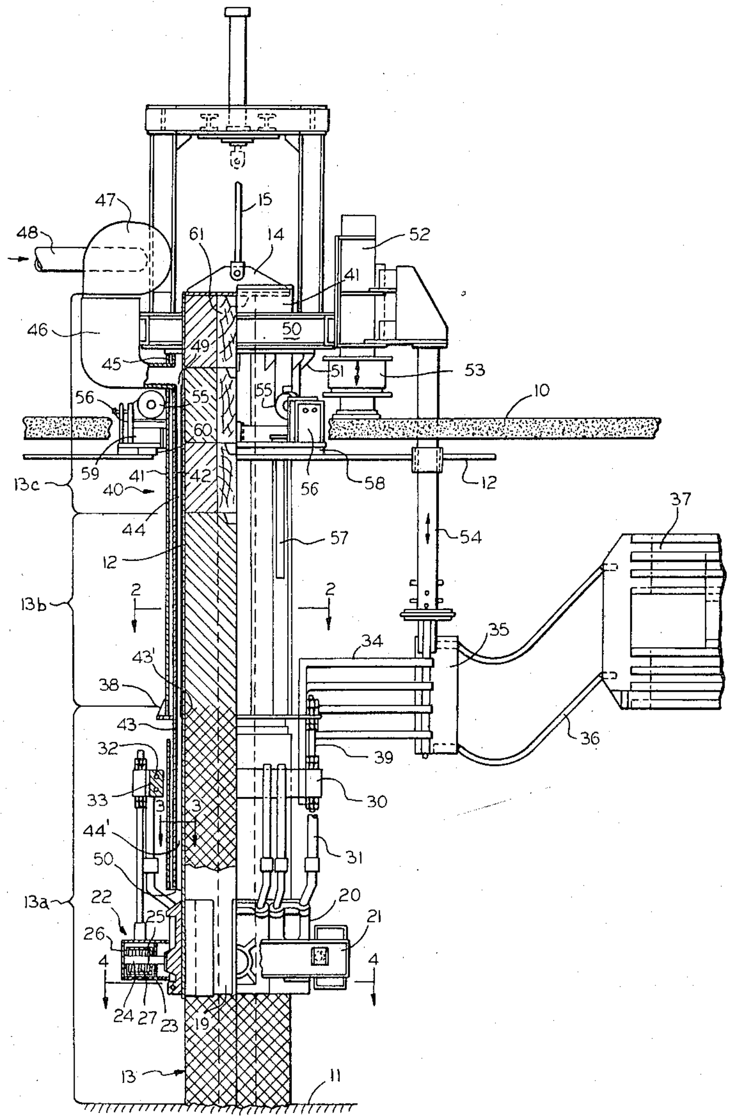

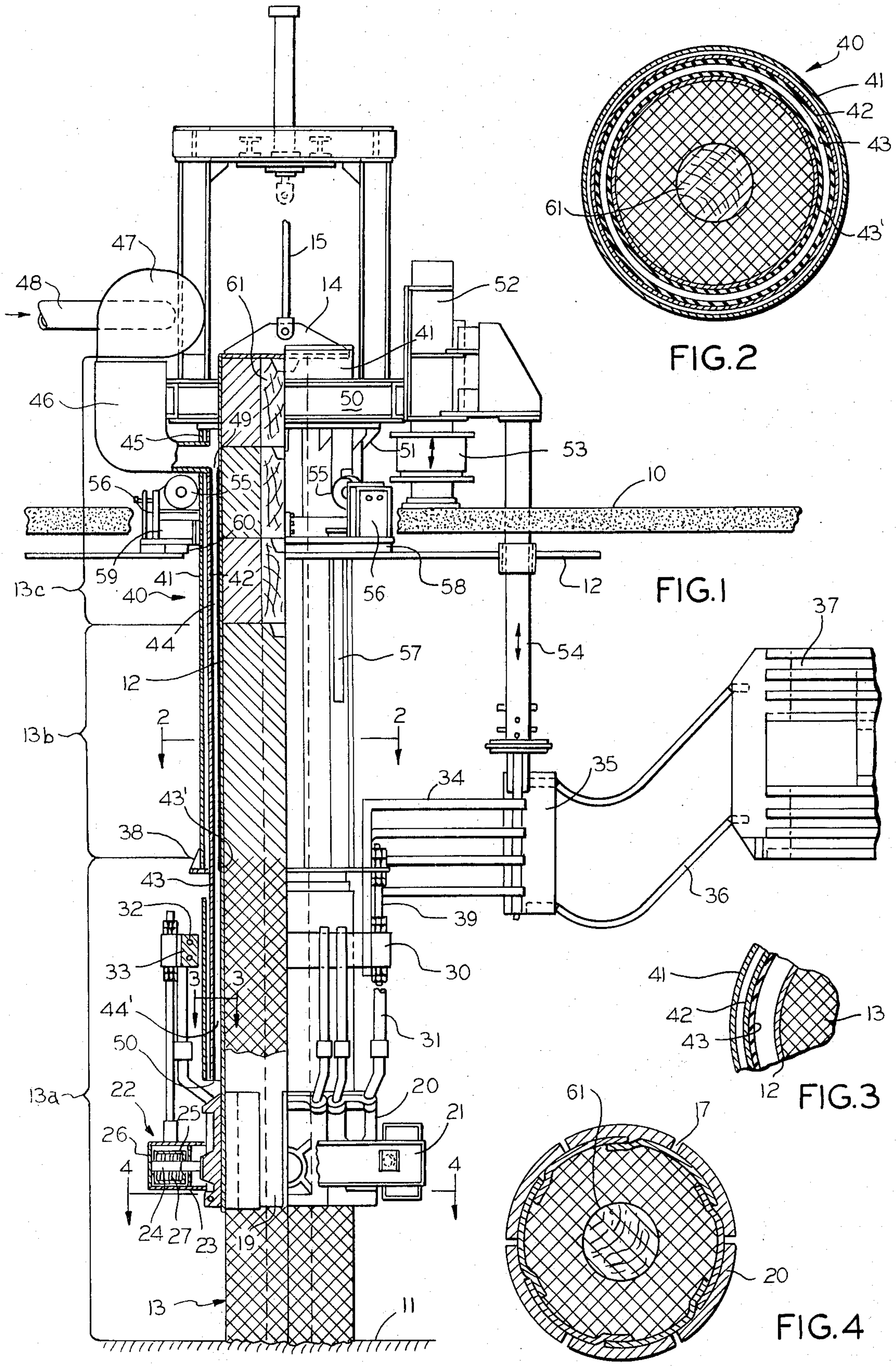

FIG.1

FIG.2

FIG.3

FIG.4

IRON-FREE SELF-BRAKING ELECTRODE

BACKGROUND OF THE INVENTION

This invention relates to a method and apparatus for making self-baking electrodes for use with electric furnaces.

Conventional self-baking electrode making apparatus comprises a vertically disposed cylindrical casing the lower end of which extends into the electric furnace. The upper end of the casing is open to permit workmen to insert chunks of carbonaceous paste which melts and ultimately cures to a solid state as a result of heat which is conducted upwardly from the cured portion of the electrode that emerges from bottom contact plates into the furnace. The cylindrical sections from which the casing is made have several inwardly directed fins to which the paste fuses near the input end. The fins provide for engagement between the casing and the uncured and cured portions of the electrode therein and the fins reinforce the electrode, conduct electric current from the contact clamps to the cured portions of the electrode and contribute toward conduction of heat from the cured portion to portions which are undergoing curing by heat.

Because the lower end of the casing from which the electrode emerges is normally in the hot environment of the furnace, the casing is consumed and new sections must be added at the top end. This is done by workmen on a floor above the furnace where they are protected. Conventionally, the electrode clamps are released to permit lowering of the self-baked electrode and the surrounding steel casing. Means are provided to adjust the distance of the casing and electrode with respect to the furnace to maintain a proper arc length with respect to the charge in the furnace.

Consumption of the casing and the fins therein result in iron being introduced into the melt within the furnace. Introduction of iron is undesirable when such products as high purity silicon and aluminum silicon are being refined in the furnace. To avoid introduction of iron into the melt, it has been customary to avoid use of self-baking electrodes and to use, instead, preformed or prebaked solid electrodes. The latter, of course, are much more expensive than self-baking electrodes and they require careful coupling of additional sections to make up for consumption of the electrode at the lower end.

One method of partially overcoming the introduction of ferrous metal into the furnace is to substitute for the usual radially inwardly directed reinforcing fins a lightweight metal framework which becomes embedded in the paste and rigidifies the electrode. The framework is free of the casing thus making it possible to advance the electrode at a somewhat higher rate than the casing is advanced in which case consumption of the casing is reduced. However, if the framework contains ferrous metal as usual, the melt in the furnace may still be somewhat contaminated, although to a lesser degree than with the method first discussed. One of the problems with this construction is that the framework must be as light as possible to minimize iron contamination in which case there may not be sufficient strength to reinforce the electrode adequately. A lightweight frame also conducts heat poorly so the paste may be cured at an unduly slow rate which results in loss of electrode strength where it emerges from the contact plates. The framework is also not in contact with the casing so that electric current is not conducted directly from the electrode contact clamps to the plastic portion of the electrode and to the cured portion. The reduced heating and curing effect of the electric current in the central portion of the electrodes compels electrodes of reduced diameter.

SUMMARY OF THE INVENTION

An object of the present invention is to provide electrode forming apparatus which minimizes introduction of metal out of which the apparatus is comprised into the molten charge within a furnace with which the electrode cooperates.

A further object of this invention is to provide apparatus which uses no fins, framework or other conductive or reinforcing members in the paste within the casing and yet provides for good thermal precuring and curing of the electrode paste before it emerges as a cured electrode from befow the contact plates.

A further object is to provide self-baking electrode forming apparatus in which the electrode may be formed without use of any fins, reinforcing framework or other structural element to conduct heat and electric current into the electrode, this object being achieved by providing electric contact members which engage the forming casing near its lower end in such manner as to have a circuit that is directed from the electrode contacts to the casing and to the solidified electrode.

A still further object is to provide for precuring of the electrode paste within the casing by surrounding it with a mantle that defines a concentric gap through which hot air or gas for curing may be circulated whereby conduction of heat from the furnace through the electrode itself need not be relied upon exclusively to cure the electrode.

Still another object of this invention is to provide for reinforcing the electrode with non-metallic members such as wooden cores which introduce no ferrous contaminant into the furnace but which are converted to charcoal and have their pores filled eventually with carbon derived from the paste and from the hydrocarbons resulting from the curing process so that the entire cross sectional diameter of the electrode is conductive.

In general terms, the invention is characterized by an electrode forming cylindrical casing which has a free bore. A paste compacting and electrode extruding ram is situated above the upper open end of the casing. Retraction of the ram permits workmen to insert electrode paste into the casing and downward advancement of the ram extrudes the cured electrode from the bottom end thereof. The bottom end of the casing is provided with longitudinally disposed overlapping joints to make it somewhat inwardly resilient. The slits created by the overlaps are in turn covered with additional material to prevent leakage of paste and minimize leakage of hydrocarbon gas. There are electric contact plates surrounding the jointed end of the casing. The contact plates are under sufficient pressure to support the casing and the electrode therein but the pressure is not so great as to prevent the electrode being advanced under the influence of the ram at the top end as it becomes necessary for the electrodes to be extended to make up for that which is consumed at its lower end.

The substantially stationary casing is surrounded in concentric spaced relation by a mantle. Hot air or gas is directed through this space in heat exchange relation with the casing to melt and prebake the electrode paste which is finally baked or cured by the more intense heat which is conducted from the arc in the furnace through the electrode.

How the above-mentioned objects and other more specific objects of the invention are achieved will appear in the ensuing more detailed description of a preferred embodiment of the new self-baking electrode apparatus which will be set forth in reference to the drawing shortly hereinafter.

DESCRIPTION OF THE DRAWING

FIG. 1 is a vertical elevation of the new self-baking electrode apparatus with parts in section and other parts in semi-section;

FIG. 2 is a transverse section taken on a line corresponding with 2—2 in FIG. 1;

FIG. 3 is a partial section taken on a line corresponding with 3—3 in FIG. 1; and

FIG. 4 is a transverse section taken on a line corresponding with 4—4 in FIG. 1.

DESCRIPTION OF A PREFERRED EMBODIMENT

Referring to FIG. 1, one may see that part of the electrode forming apparatus is above a floor **10** and another part is below the floor. A region far below floor **10** is occupied by an electric furnace which is not shown but the upper surface of the charge within the furnace is indicated by the reference numeral **11** near the bottom of FIG. 1. One of the hoods **12** of the furnace is shown fragmentarily and is seen to be positioned immediately beneath floor **10**.

The electrode forming apparatus in FIG. 1 comprises a cylindrical metal casing **12** in which carbonaceous paste may be introduced for being baked into solid electrode. The casing may be made up of a number of curved sections welded together. The interior of casing **12** is smooth and does not have the usual radially inwardly extending electrode supporting fins nor any other metallic reinforcement for the electrode that is formed therein. The formed, cured and solidified electrode portion **13** emerges from the bottom end of casing **12** under the influence of a ram head **14** at the top of the casing. Ram head **14** may be retracted from within the casing to permit workmen on floor **10** to introduce chunks of electrode paste into casing **12**. Ram head **14** is driven by the connecting rod **15** of a fluid operated cylinder **16**. Cylinder **16** can be pressurized to effectuate extrusion of electrode **13** from the bottom end of the casing. A mechanically operated ram could be substituted for the fluid operated ram if desired.

As shown in FIGS. 1 and 4, the lower end of electrode forming casing **12** is provided with circumferentially spaced axially extending overlapping joints **17** which make the end of the casing somewhat resilient and yielding to radially applied forces. The overlapping joints **17** prevent leakage of electrode paste, minimize loss of hydrocarbon gases and provide a large electric contact interface with exterior of casing **12**. Overlapping joints **17** and casing **12** constitute an articulated structure which permits application of a gripping force by the casing on the electrode **13**. Other resilient or articulated clamping mechanisms could be substituted for the one just described.

The lower end of the casing is surrounded by a plurality of electrode contact members **20**. Contact members **20** are carried on a pressure ring **21**. Each contact is associated with a device **22** for applying pressure to the contact **20**. The pressure applying devices **22** may comprise a housing **23** and a plunger **24** surrounded by a shouldered sleeve **25**. A spring **26** reacts against the shoulder and forces the plunger **24** against its associated electrode contact **20**. A threaded collar **27** permits adjustment of spring pressure. The total force of the various plungers against the contact **20** is adequate to bring about a clamping action by the segments **19** of casing **12** against the electrode **13**. The force is great enough to support the baked electrode **13** and the casing **12** and to prevent their inadvertent movement toward the furnace. The electrode **13** is actually restrained from inadvertent vertical movements by frictional force of the articulated casing bottom. When it is desired to feed more baked electrode into the furnace to make up for that which may be consumed in the electric arc, a force is applied to ram head **14** at the upper end of the casing and the frictional force at the lower end is overcome in which case the solid cured end **13** of the electrode is caused to extrude from the lower end of casing **12**.

For self-baked electrode having a diameter of about 35 inches, it has been found that a holding force of about 30 to 40 pounds per square inch on electrode contacts **20** is sufficient to prevent slippage of the electrode from the casing except when a predominating force is applied by means of ram **14**.

The electrode contacts **20** are connected to a power distribution bus ring **30** by means of a plurality of tubular conductive members **31**. Power distribution ring **30** may be provided with coolant fluid passages such as **32** and **33** which are in fluid communication with the interior of conductor tubes **31** to provide coolant to the hollowed out electrode contact elements **20** if desired. Power distribution ring **30** is connected by any suitable means to a plurality of conductor tubes **34** which are in turn in electrical continuity with a bus **35** to which a large number of paralleled flexible conductors **36** are connected. The flexible conductors **36** lead back to a bus terminal **37**, shown in part, which connects to a terminal of a power transformer, not shown. The electric circuitry intervening between the electrode contacts **20** and the power transformer is substantially conventional and need not be described in greater detail.

Casing **12** is, of course, not fed into the furnace during operation thereof nor during forming an electrode therein. The only time casing **12** moves is when it is advanced jointly with the electrode for the purpose of establishing the position of the electrode tip as will be described subsequently.

Casing **12** is surrounded by a cylindrical mantle **40** which is moved bodily with the casing to adjust the position of the tip of the baked electrode **13** within furnace charge **11**. Sections taken through the mantle **40** may be seen in FIGS. 2 and 3. Mantle **40** comprises an outer cylindrical shell **41** and an inner cylindrical shell **42** in concentric spaced relationship therewith. There are layers of thermal insulation **43** and **43'** on the inside surface of inner shell **42** and the outer surface of the upper casing **12** section. The two layers of thermal insulation are radially spaced so as to define a concentric gap **44** around the casing as can be seen in FIGS. 1–3. Insulating layers **43** and **43'** terminate near the lower casing **12** section and the mantle **42** and casing **12** then form an uninsulated gap **44'** which is continuous with gap **44.** Hot air or other hot gas is forced downwardly through gap or duct **44, 44'** from an encircling plenum **45** which is supplied with pressurized hot air through a duct **46** leading to a blower **47.** By means of a conduit **48,** the intake side of blower **47** is connected to a source of hot air, such source not being shown. The source may be an ordinary hot air furnace in which fuel is burned in a combustion chamber that is in heat exchange relation with air circulating over it. The hot air is drawn into the system by fan **47** and forced through duct **44** in heat exchange relationship with casing **12** at the lower end portion of the mantle **40** only so that the electrode paste within the casing in the lower end portion is subjected to heat for precuring. The temperature of the air is sufficient to bake the contained paste at about 450°C. The hot air enters duct **44** through annular gap **49** at the top thereof and the hot air exits from the duct at the lower end **50** inside of the furnace hood. Because the hot gases emerge under the furnace hood, it is also possible to use rather completely oxidized hot gases of combustion directly for heating the lower part of electrode casing **12** instead of heating air by passing it over a combustion chamber.

The mantle **40** is supported at its upper end by a ring **50** which connects to the outer shell **41** of the mantle by means of several gusset plates **51** which may be welded to shell **41** and ring **50.** Ring **50** is in turn carried by a frame **52** which is supported on an electrode elevating and lowering hydraulic cylinders **53,** one of which is visible in FIG. **1.** This cylinder may also be of the pneumatic type. In any event, by means which are not shown, the cylinder **53** may be actuated to raise or lower ring **50** and thereby raise and lower electrode casing **12,** the electrode **13** and surrounding mantle **40** jointly with casing **12.** These components are jointly raised or lowered in accordance with the need for adjusting current flow to the furnace charge by increasing or decreasing the length of the arc between the tip of the electrode **13** and charge **11** or by adjusting the distance in which the electrode projects into the charge or a slag layer thereon if the furnace is of the thermal conductive type rather than an arc furnace. The servo system for sensing voltage drop across the arc and actuating electrode positioning cylinder **52** accordingly is not shown since this system may be conventional and is well known to those skilled in the art.

When casing **12** and mantle **40** are raised or lowered together there is no slippage between electrode **13** and the clamping arrangement at the lower end of casing **12.** Under these circumstances the electrode contact elements **20** are also raised and lowered with the casing and mantle as are the conductors **34** and flexible conductors **36** by virtue of the latter being supported on a post **54** which is connected to frame **52** through floor **10.** A set of circumferentially spaced guide rollers **55** are journaled for rotation on associated stationary brackets **56.** Rollers **55** guide and maintain the alignment of mantle **40** when it is undergoing bidirectional vertical movements in response to signals that indicate the need for a change in the arc length. Rollers **55** ride on hardened bearing strips **57** which may be welded on the external surface of the outer mantle shell **41.** Brackets **56** are supported on a base **58** which is mounted on furnace hood **12** although it could be mounted on any stationary structural member of sufficient strength. Beneath rollers **55** is a duct **59** which is maintained at positive pressure and which has an air exit passageway **60** for the purpose of preventing gases from the furnace leaking to the space above floor **10.** This is merely exemplary since a furnace fume seal can take a variety of forms as is known to those skilled in the art.

Electrode casing **12** and the self-baked electrode **13** therein is indicated to be comprised of several regions which are in various states of curing. The regions are indicated by brackets. The region embraced by lowermost bracket **13*a*** is that in which the electrode is substantially fully cured and hardened throughout. In region **13*b***, the electrode paste is in a substantially unbaked state near the top and a substantially fluid state near the bottom. Electrode paste additions are made in region **13*c***.

Operation of the electrode forming apparatus is as follows. Assume that the furnace is operating and that electrode exists within casing **12** in various states of curing. Assume that so much of the lower tip of electrode **13** has been consumed as to make it desirable to extend the electrode further into the furnace. This is done by actuating cylinder **16** to cause ram head **14** to force the electrode downwardly for greater emergence from casing **12.** The downward force need only be sufficient in combination with the weight of the electrode to overcome the frictional holding force applied by the pressurized contact plates **20** acting on the articulated or slotted lower end of casing **12.** When the baked electrode extends sufficiently far from the casing **12,** ram head **14** is retracted so as to expose the cavity in the top part of casing **12** which has been created by extrusion of electrode from the bottom part. Workmen on floor **10** may then introduce more electrode paste into the top interior void in casing **12.** Although not previously discussed in detail, there are also provided wooden core sections **61** which are connected to each other by the workmen prior to introduction of additional paste into the top of casing **12.** Paste is introduced around the core. The cores may be connected by means of threaded projections on one being received in the opposite end of the next consecutive section or the wooden cores may be connected by providing them with tapered wooden plug extensions that register in a correspondingly tapered hole in an adjacent section. Any method of connection that does not use ferrous elements may be used. The paste in portion **13*c*** of the electrode subsequently melts due to the heat from the hot air in duct **44** defined by mantle **40** and the paste fuses around the wooden core to form a relatively baked mass in portion **13 *a*.** As the paste is extruded downwardly in casing **12,** it gets hotter and hotter as a result of heat exchange with the hot air in duct **44** and continues to solidify and at the same time the volatile hydrocarbons are liberated. The volatile hydrocarbons are sealed off against upward exit by the molten paste so they are forced downward into the pores of the electrode in a region below the contact plates where the electrode is more thoroughly cured and hardened but porous enough to accept the hydrocarbon gases. Eventually, these gases become sufficiently heated by conduction from the furnace up the electrode to fractionate and produce carbon with deposits in the pores of the more completely cured portions of the electrode. This improves electric conductivity of the exited solidified and cured electrode portion below the contact plates which electrode may attain a temperature of about 1,100°C which is sufficient to crack the gases and deposit carbon. Even before the electrode material reaches this temperature, the wooden plugs **61** become carbonized and porous and capable of receiving gases which fractionate and deposit carbon in their pores. This further contributes to the electrical conductivity of the electrodes.

Continuous adjustment of the electrode tip position in response to current and voltage sensitive sensors, not shown, is obtained, as discussed generally above, by moving mantle **40**, the casing **12**, the electric contact elements **20**, the fan **47**, its associated duct work and the supporting frame **50** bodily in one vertical direction or another by actuation of fluid operated cylinder **53**. These movements are rather small amplitude and do not result in moving casing **12** substantially closer to the intensely heated part of the furnace where melting thereof might occur so as to introduce ferrous contaminants into the melt.

Good electrical contact is maintained between the casing and electrode at all times including those times when electrode is being forced out of casing **12** in opposition to the frictional holding force which exists between the bottom articulated part of the casing and the electrode.

Although a preferred embodiment of the invention has been described in considerable detail, such description is to be considered illustrative rather than limiting, for the invention may be variously embodied and is to be limited only by interpretation of the claims which follow.

I claim:

1. Self-baking electrode apparatus for use with an electric furnace, said apparatus comprising:

a. a metal casing having an opening in one end for electrode exit and an opening remote therefrom for introduction of electrode forming material into said casing which material first becomes plastic and is then successively baked to a hardened state in which it emerges from said one end,

b. means for supporting said casing relative to said furnace,

c. means for restraining said electrode against substantial emergence from said casing, and

d. means for applying a force on said electrode forming material within said casing to thereby overcome said restraint of said electrode and cause it to emerge from said casing.

2. The apparatus set forth in claim **1** wherein:

a. said casing has a substantially uniform cross sectional shape and a substantially smooth and clear interior over its entire length.

3. The invention set forth in claim **1** including:

a. electric contact means engaged with said casing,

b. said restraining means including articulated means surrounding and engaged with a substantially solidified portion of said electrode, said articulated means being interposed between said contact means and said electrode and said articulated means being adapted to yield toward the center of said electrode under the influence of force applied through the agency of said contact means.

4. The invention set forth in claim **1** wherein:

a. there are a plurality of perimetrally disposed axially extending overlapping jointed segment means in said one end region of said casing, said segment means being yieldable toward the electrode in said casing.

5. The invention set forth in claim **1** including:

a. means defining a duct for conducting hot gas in heat exchange relationship with said casing, said duct surrounding at least the lower end portion of said casing, said hot gas effecting prebaking of said electrode material.

6. The invention set forth in claim **5** wherein:

a. said casing is vertical and said casing supporting means also supports said duct means, said supporting means being constructed and arranged for executing bidirectional vertical movements to thereby jointly move said duct, casing and electrode in relation to a furnace, and

b. means for moving said supporting means.

7. The invention set forth in claim **6** including:

a. blower means for forcing heated gas generally downwardly along said casing means.

8. The invention set forth in claim **1** including:

a. means defining a duct surrounding said casing over a substantial part of its length,

b. thermal insulation interposed between said duct and said casing in the upper portion thereof, the lower portion of said casing being uninsulated so that hot gas conducted by said duct will precure the electrode in the lower portion of said casing.

9. The invention set forth in claim **1** including:

a. a mantle surrounding said casing in spaced relationship to define a passage for heated gas, said mantle extending a substantial distance over the length of said casing,

b. said mantle having an inlet for admitting heated gas to one end of said passage and an exit remote therefrom, and

c. means for coupling a source of hot gas to said inlet.

10. The invention set forth in claim **9** including:

a. thermal insulation in said passage next to said casing and disposed to substantially limit heating of the paste in said casing adjacent to the one end portion thereof.

11. The invention set forth in claim **9** wherein:

a. said mantle is supported jointly with said casing by said supporting means, said supporting means being constructed and arranged for moving bidirectionally vertically to thereby enable joint movement of said mantle, casing and electrode in respect to a furnace, and

b. means for moving said supporting means.

12. The invention set forth in claim **11** including:

a. blower means supported for moving jointly with said mantle for blowing said hot gas downwardly along said casing.

13. The invention set forth in claim **1** wherein:

a. said means for applying force on said electrode forming material comprises ram means adapted to register in said remote opening of said casing, and

b. means operatively coupled with said ram means for forcing said ram means against said electrode material to expel said electrode from said casing and to retract said ram means to allow introduction of electrode forming material in said casing.

14. The invention set forth in claim **13** wherein:

a. said last named coupled means is a pressure operated cylinder.

15. Self-baking electrode apparatus for use with an electric furnace, said apparatus comprising:

a. a vertically disposed metal casing having a lower open end and an opening in its upper end for introduction of electrode forming material which becomes plastic and is successively baked to a hardened state in which it emerges from said lower end,

b. support means for supporting said casing with its lower end positioned for cooperation with said furnace,

c. clamp means constructed and arranged to bear against said electrode in its region of emergence where it is in a substantially hardened state,

d. first means for applying a force on said clamp means to clamp said electrode against descending from said casing under the influence of gravity, and

e. second means for applying sufficient force to said electrode through said upper opening in said casing to overcome the clamping force on said clamp means so as to cause said electrode to emerge further from said casing.

16. The invention set forth in claim **15** wherein:

a. said clamp means include a plurality of perimetrally disposed axially extending segments near the lower end of said casing, said segments being yieldable toward said electrode for frictional engagement therewith.

17. The invention set forth in claim **15** including:

a. means defining with said casing a passage extending along said casing over a substantial portion of its length, said passage being for conducting heated gas along the outside of said casing to prebake said electrode material therein, a portion of said passage being in intimate heat exchange relation with a lower end portion of said casing, and

b. means for admitting heated gas to said passage.

18. The invention set forth in claim **17** wherein:

a. said passage defining means has an opening near the lower end of said casing for permitting gas to exit from said passage.

19. The invention set forth in claim **17** including:

a. means for moving said support means in opposite vertical directions,

b. said passage defining means being supported by said support means and said casing being supported from said passage defining means whereby said electrode may be adjusted vertically with respect to said furnace to alter the distance between said electrode and contents of said furnace while said electrode remains clamped to said casing.

20. The invention set forth in claim **15** including:

a. a plurality of overlapping, axially extending segments firming the lower end of said casing, plate means disposed over the joints between the segments of said casing,

b. electric contact means pressed against said plate means,

c. said first force applying means acting on said contact means.

21. The invention set forth in claim **20** including:

a. means connected with said contact means for connecting said contact means to a source of electricity.

22. Self-baking electrode apparatus for use with an electric furnace, said apparatus comprising:

a. a vertically disposed tubular metal casing supported with its lower end in cooperative position relative to said furnace,

b. the upper end of said casing providing access for introducing electrode forming material into said casing, said material being characterized by being in a plastic state when in a certain temperature range and by being cured to a hardened state when in a certain relatively higher temperature state, said electrode extending from said lower end of said casing in a substantially hardened state,

c. means for frictionally engaging a portion of said electrode in a region where it is hardened substantially near the lower end of said casing whereby to restrain said electrode selectively stationarily in said casing in opposition to the force of gravity on said electrode, and

d. means for applying sufficient force to said electrode forming material at the upper end of said casing to overcome said frictional force and extend said electrode further from said casing.

23. The invention set forth in claim **22** wherein:

a. said casing includes means defining at least one overlapping joint at the lower end thereof to enable said casing to yield toward said electrode for said frictional engagement,

b. means conforming substantially to the contour of said casing and disposed over said joint means,

c. electric contact means in electric current exchange relation with said conforming means,

d. means for applying a force on said contact means which is transmitted by the same to said plate means for causing said casing means to yield and effect said frictional engagement.

24. The invention set forth in claim **23** wherein:

a. said last named force applying means includes rigid ring means surrounding said contact means,

b. plunger means supported on said ring means and projecting against said electric contact means, and

c. spring means biasing said plunger means toward said contact means.

25. The invention set forth in claim **22** including:

a. a mantle extending a substantial distance over said casing and being in spaced relation therewith to define a gas flow passage,

b. means for forcing heated gas through said passage longitudinally of said casing to thereby supply additional heat to said electrode material for prebaking the same.

26. A method of making and using a self-baking electrode in association with an electric furnace, comprising:

a. introducing unbaked carbonaceous material into the upper end of a vertically disposed tubular casing whose lower end cooperates with a furnace and from which lower end a baked and hardened portion of said electrode extends,

b. directing heated gas over the exterior surface of said casing to prebake and cure said material near said lower end portion while at the same time heating said lower hardened portion by conducting current therethrough and by radiation and conduction of heat resulting from electric activity in said furnace,

c. applying sufficient compressive force to a portion of said casing at the lower end thereof where said electrode is in a substantially hardened state to frictionally restrain said electrode against emergence from said casing under the influence of gravity, and

d. periodically applying a vertically directed force on the material at the upper end of said casing to overcome said frictional restraint and cause said lower hardened electrode portion to extend further from said casing.

27. The method set forth in claim **26** including:

a. inserting wood core sections in sequence substantially centrally of said casing at the upper end thereof to provide a wooden spine through said electrode for strengthening the same, said unbaked carbonaceous material being inserted at the upper casing end around said core.

28. The method set forth in claim **26** wherein:

a. said heated gas has an initial temperature in excess of 450°C.

29. The method set forth in claim **26** wherein:

a. said electrode is baked at such rate that the hydrocarbon gases evolved from said carbonaceous material in the stages of baking near said lower end are prevented from escaping to said upper end by a vertically upward portion of said material being in a plastic state, whereby said gases are forced downwardly into the pores of the increasingly baked electrode portion.

* * * * *

United States Patent [19] [11] **4,003,615**

Suga [45] **Jan. 18, 1977**

[54] **COATED CARBON ELECTRODE HAVING AN INNER COATING OF LOW RESISTANCE MATERIAL**

[76] Inventor: **Shigeru Suga,** Yoyogi 5-20-2,
Shibuya, Tokyo, Japan

[22] Filed: **Jan. 12, 1976**

[21] Appl. No.: **648,162**

[30] **Foreign Application Priority Data**

Feb. 3, 1975 Japan 50-14693

[52] **U.S. Cl.** **314/60**
[51] **Int. Cl.²** **H05B 31/10**
[58] **Field of Search** 13/18; 314/60; 219/146; 313/355, 354

[56] **References Cited**

UNITED STATES PATENTS

3,461,339	8/1969	Robiette et al.	13/18
3,476,586	11/1969	Valtchev et al.	13/18 X
3,867,667	2/1975	Suga	13/18 X

Primary Examiner—R. N. Envall, Jr.
Attorney, Agent, or Firm—Wenderoth, Lind & Ponack

[57] **ABSTRACT**

A carbon electrode for use in an arc lamp used for determining light fastness which has a central core of light emitting material combined with stabilizers and graphite surrounded by a first coating of low resistance electrically conductive material, preferably copper or aluminum. The thus-coated core is further coated with a second coating of graphite and adhesive and inserted into a cylindrical carbon tube. The tube, except for the top and bottom portions is coated around the outside with a third protective coating, and the base and bottom portions of the tube are coated with a metallic coating electrically connected to the first coating of low resistance material spaced from the third coating. The third and fourth coatings may be joined together, provided that the resistance of these two coatings is greater than the resistance of the first coating.

10 Claims, 8 Drawing Figures

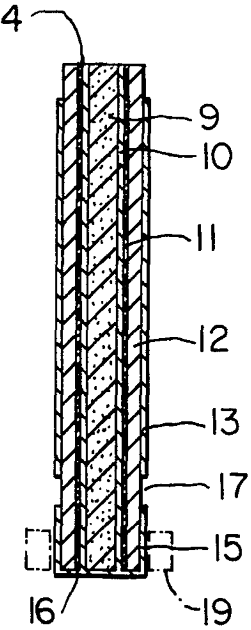

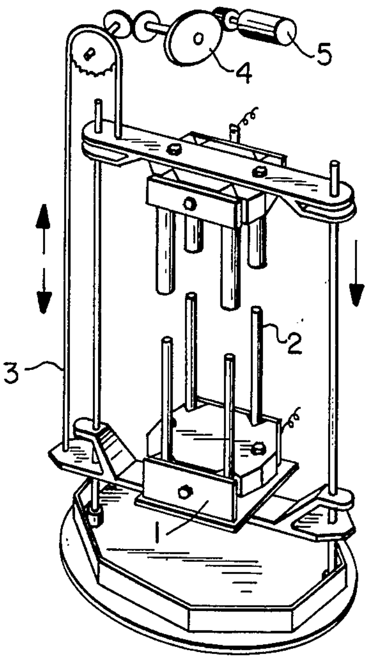

FIG. 1

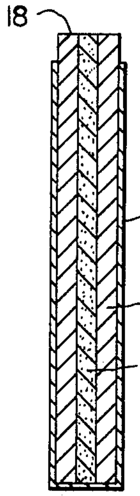

PRIOR ART
FIG. 2

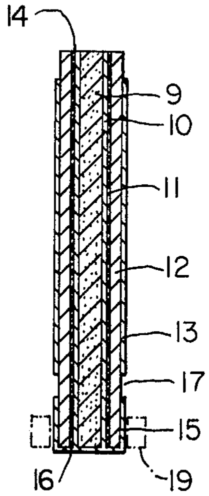

FIG. 3

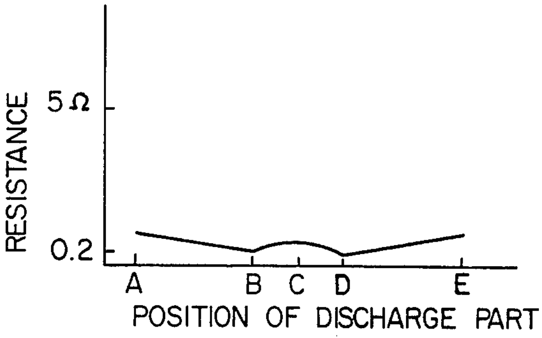

FIG. 7

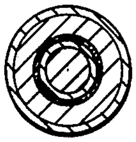

FIG. 4

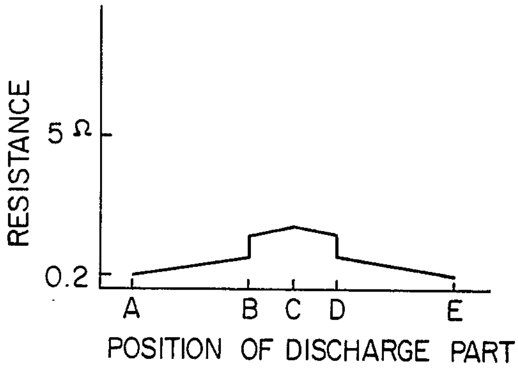

PRIOR ART
FIG. 8

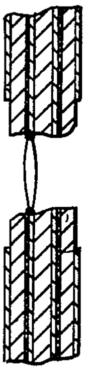

FIG. 5

PRIOR ART
FIG. 6

COATED CARBON ELECTRODE HAVING AN INNER COATING OF LOW RESISTANCE MATERIAL

The device of the present application is related to the construction of a carbon electrode that is to be used in a carbon arc lamp used in light fastness testers. In this new device, a metal coating is provided between the central core and a surrounding carbon layer so that the light discharge will be very stable in comparison to conventional carbon electrodes.

BACKGROUND OF THE INVENTION

At the present time, conventional arc lamps are providing the light source for light fastness testers are constructed as shown in FIG. **1.** The lower electrode holding part **1** has four carbon electrodes mounted thereon, and an upper electrode holding part likewise has four carbon electrodes mounted thereon directed downward toward the carbon electrodes mounted on the lower holding part **1.** Light discharge between the upper and lower electrodes occurs when the distance between the two holding parts is automatically adjusted by means of a servo motor **5,** a chain **3** and a gear **4.** A specimen to be tested for light fastness is placed in the vicinity of the lamp.

Conventional carbon electrodes used in the above described arc lamp generally have a light emitting material or a central core which is surrounded by carbon material. The carbon material is, itself, coated with a copper coating around the sides and across the bottom. The tip of the conventional electrode is not copper-coated.

The problem with these conventional carbon electrodes is that they have a relatively short burning life, and more importantly, they do not have suitably stable light emitting qualities. As the carbon tube material of these conventional electrodes is consumed during discharge between the electrodes, the discharge emitting the light moves from the outer carbon toward the central core, thus changing the location of the bright spot of the emitted light. As the bright spot moves, the properties of the emitted light differs spectrally.

SUMMARY OF THE INVENTION

It is the object of the present invention to provide a carbon electrode in which the light emitting core and the carbon theresurrounding burn uniformly to produce a stable, unvarying light, and which has a greatly extended burning time in comparison to conventional carbon electrodes.

To meet this objective, the carbon electrode of the present invention is provided with a round, bar-shaped central core of light emitting material, a first coating of low electrical resistance metal covering this central core, a tubular carbon cylinder into which the central core and the first coating are inserted, and finally, an additional coating of metal or resin covering the sides of the carbon cylinder and in electrical contact with the first metal coating within the carbon cylinder. The tip, however, is left uncoated by this additional coating. Since the first coating has the lowest electrical resistance, the bright spot of the arc between two of these electrodes will form thereinbetween and remain there, thus consuming the electrode uniformly and producing a stable light.

BRIEF DESCRIPTION OF THE DRAWINGS

Further objects and features of the present invention will be apparent from the following description taken with the accompanying drawing, wherein:

FIG. **1** shows a conventional carbon arc lamp for light fastness testers.

FIG. **2** shows a cross-sectional view of a conventional carbon electrode used in light fastness testers.

FIG. **3** is a cross-sectional view of a carbon electrode according to the present invention.

FIG. **4** is a plan view of the carbon electrode according to the present invention.

FIG. **5** is a diagram showing the discharging state of the carbon electrode of the present invention.

FIG. **6** is a diagram showing the discharging state of the conventional carbon electrode.

FIG. **7** is a diagram showing resistances in the direction of the diameter of the carbon electrode of the present invention.

FIG. **8** is a diagram of resistances in the direction of the diameter of a conventional carbon electrode.

DETAILED DESCRIPTION OF THE PRESENT INVENTION

The conventional carbon electrode is shown in FIG. **2.** In that electrode, a core **8** of light emitting material is surrounded by carbon material **7.** Around both the sides and the bottom of this carbon material **7** and core **8** is a copper coating **6.** The coating **6** does not, however, extend to cover the electrode tip **20.**

In comparison to the conventional electrode of FIG. **2** is the carbon electrode of the present invention disclosed in FIG. **3.** The central core portion **9** of the present invention is a round bar formed from a mixture of suitable light emitting material, such as cerium fluoride, with a stabilizer material, such as potassium sulfate, and graphite. This mixture is calcined at a temperature of 500° – 1000° C. Covering the sides of the central core portion **9** is a first coating **10** of low electrical resistance electrically conductive material, such as copper or aluminum. This first coating **10** is provided by suitable coating methods such as electroplating or evaporation coating. A second coating **11** containing an electrically conductive adhesive, such as a phenol resin, mixed with graphite covers the first coating **10** of electrically conductive material. A cylindrical tube **12** is formed and calcined from carbon material, such as carbon black. The previously formed central core **9** coated with the first and second coatings **10** and **11** is forceably inserted into the cylindrical tube **12** and, then, is dried and adhered thereto. A third coating of metal, such as copper, aluminum or any other metal, or resin **13** covers the sides of the electrode surrounding the cylindrical tube **12.** The resinous coating **13** may be of resins such as phenol resins. The tip **14** is not coated with a third coating **13** to allow for easy discharging. Finally, a fourth coating **15** of conductive metallic material, such as copper or aluminum, covers the lower portion of electrode which will be held within an electric holder **13.** This fourth coating **15** is also electrically connected to the first coating **10** of the core portion at the bottom **16,** in a manner such as electroplating.

The fourth coating **15** is electrically separated from the third coating **13** by a suitable distance **17** if the central core **9** and the cylindrical tube **12** are made of the same material, and when the third and fourth coatings are of the same metallic material (copper or aluminum) the space is also necessary.

However, when the third and fourth coatings **13, 15** are of different metallic materials (the third coating **13** being anything but copper or aluminum) the space inbetween is unnecessary, but, an adjustment in the thickness of the third coating **13** may be necessary, because the resistance of the third coating **13** must be greater than that of the first coating **10.** If the third coating is not a metallic material, but is a heat resistive resin, the spacing between the third and fourth coatings is also unnecessary.

By constructing the electrode according to this arrangement and with these materials, the resistance and hence the electrical flow through the electrode is altered from the electrical flow found in the conventional electrodes. Even when graphite having good electrical conductivity is used to form the central core portion **9,** the mixing of the light emitting material, such as cerium fluoride, therewith greatly increases the electrical resistance in the central core portion **9.** In fact, a central core portion **9** of approximately 30 centimeters will have the resistance of several ohms. At the same time, the cylindrical tube **12** of carbon black will have a relatively small resistance, probably less than 0.5 ohm. Most significant, however, is the effect to the resistance of the electrode by employing the first coating **10.** The resistance between the first coating **10** and the central core portion **9** and the resistance between the carbon tube **12** and the first coating **10** are both generally less than 0.2 ohm.

The relationships of the resistances across the length of the electrode of the present invention are shown in FIG. **7.** The symbol "A" represents the outside of the carbon tube **12,** "B" represents the first coating **10** on the boundary between the central core portion **9** and the carbon tube **12,** "C" is at the central part of the central core portion **9,** "D" is at the boundary symmetrical with "B" and "E" is at the outer part symmetrical to "A". As is apparent from the diagram, the resistance is smallest at the boundary parts B and D, the first coating **10.**

With reference to the relationship of the resistances of the conventional carbon electrodes, reference is made to FIG. **8.** The conventional carbon electrodes which do not have the first coating **10** of copper or aluminum around the central core portion therein have a greater contact resistance between the central core portion **8** and the central tube **7,** and the resistance of the central core portion itself aids to increase the resistance at the core parts B, C and D as shown in FIG. **8.**

When actually discharged, the carbon electrode of the present device assumes the state as shown in FIG. **5.** That is, since the first coating **10** surrounding the central core portion **9** has the smallest electrical resistance, the bright point of the arc inevitably developes at this boundary point, and the discharge is sustained at the boundary part. Therefore, the light emitting material of the central core portion and the cylindrical tube **12** burn uniformly, produce a very stable light, and extend the burning time of the electrode as compared to the conventional electrode counterparts.

The discharging state of the conventional carbon electrodes is shown in FIG. **7.** Since the lowest resistance through the conventional electrode is through the carbon tube **7,** the carbon tube is worn down in use due to large quantities of discharge between the carbon tubes. During the burning process, discharge moves from the outside toward the central core **8,** thereby relocating the bright point of the art considerably. Furthermore, the properties of light differ spectrally depending upon the location of the bright point in relation to the central core part **8** and the carbon tube **7.**

However, as mentioned above, by using an electrode of the present type having an area of reduced electrical resistance between the core portion and the surrounding carbon portion, the bright point of the arc remains stationary and the light emitted is very stable. In fact, it is possible to obtain a definite quantity of light within an accuracy of 1% at a discharge of 50 volts, 60 amps as specified by the Japanese Industrial Standards. When the carbon electrode of the present invention is used in an arc lamp for a color fastness tester, it is possible to quite accurately determine the color fastness of objects placed in the vicinity thereof.

It will be apparent that various modifications may be made to the above specifically described structural arrangements without departing from the scope of this invention.

What is claimed is:

1. A carbon electrode for use in an arc lamp used for determining light fastness, said carbon electrode comprising:

a round central core portion comprised of a mixture of:
  light emitting materials,
  stabilizer material, and
  graphite;
a first coating of low resistance electrically conductive material covering the outside, but not the ends, of said central core portion;
a second coating of adhesive and graphite surrounding said first coating;
a cylindrical carbon tube with said first and second coated central portion inserted, dried, and adhered thereinto;
a third protective coating surrounding the outside of said cylindrical carbon cylinder above the bottom of said carbon cylinder and beneath the top end of said carbon cylinder; and
a fourth metallic coating covering the bottom end of said first and second coated central core and said carbon tube and surrounding the outside base of said cylindrical carbon tube, spaced from said third coating, electrically connected to said first coating and having a higher electrical resistance than said first coating.

2. A carbon electrode as claimed in claim **1,** wherein:
said light emitting material is cerium fluoride;
said stabilizer is potassium sulfate; and
said mixture of light emitting material, stabilizer and graphite is calcined at a temperature of 500° to 1000° C.

3. A carbon electrode as claimed in claim **1,** wherein said first coating is selected from the group consisting of copper and aluminum.

4. A carbon electrode as claimed in claim **1** wherein said cylindrical carbon tube is comprised of carbon black.

5. A carbon electrode as claimed in claim **1** wherein said third coating is comprised of a resin.

6. A carbon electrode as claimed in claim **1** wherein said third coating is comprised of a metal.

7. A carbon electrode as claimed in claim **6,** wherein said third coating is selected from the group of metals consisting of copper and aluminum.

8. A carbon electrode as claimed in claim **1** wherein said fourth coating is selected from the group consisting of aluminum and copper.

9. A carbon electrode as claimed in claim **1** wherein said third and fourth coatings are comprised of different metal material, are joined together to form one continuous coating electrically connected to said first coating, said combined third and fourth coatings having an electrical resistance greater than the resistance of said first coating.

10. A carbon electrode as claimed in claim **1** wherein said third coating is a resin; said fourth coating is a metal; and said third and fourth coatings are joined together, whereby a continuous coating electrically connected to said first coating is formed.

* * * * *

United States Patent [19] [11] **4,005,325**

Suga [45] **Jan. 25, 1977**

[54] CARBON ELECTRODE FOR EMITTING LIGHT SIMILAR TO SUNSHINE FOR LIGHT-FASTNESS TESTING

[76] Inventor: **Shigeru Suga,** Yoyogi 5-20:2, Shibuya, Tokyo, Japan

[22] Filed: **July 22, 1975**

[21] Appl. No.: **598,076**

[52] **U.S. Cl.** **313/352;** 13/18; 314/60; 313/311; 313/354; 313/355

[51] **Int. Cl.^{2}** **H01J 1/02;** H01J 1/14; H01J 1/38; H01J 1/48

[58] **Field of Search** 313/352, 354, 357, 353, 313/355, 356, 311; 314/15, 16, 18; 13/15, 16, 18

[56] **References Cited**

UNITED STATES PATENTS

2,185,679	1/1940	Parisot	313/354 X
3,262,005	7/1966	Riek	313/352 X
3,297,903	1/1967	Riek	313/357 X
3,313,976	4/1967	Lauzau et al.	313/357 X
3,399,322	8/1968	Ambe	313/352 X

FOREIGN PATENTS OR APPLICATIONS

622,748	5/1946	United Kingdom	313/357

Primary Examiner—Saxfield Chatmon, Jr.
Attorney, Agent, or Firm—Wenderoth, Lind & Ponack

[57] **ABSTRACT**

A carbon electrode for a carbon arc lamp for emitting light similar to sunshine for use as a light source in light-fastness and weathering tests. The carbon electrode is composed of carbon which is homogeneously mixed with an amount of an incandescent material in a proportion of 6 to 12 weight percent of the total weight of the carbon and incandescent material together, and then molded into the shape of the electrode. The surface of the carbon electrode, exclusive of the top thereof, is provided with a copper or other metal coating.

3 Claims, 16 Drawing Figures

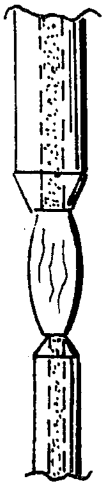

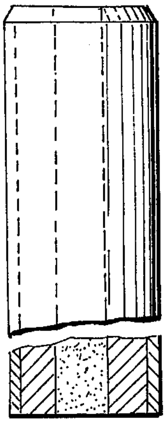
FIG.1

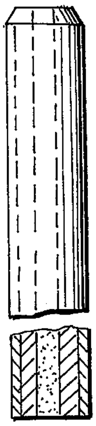
FIG.3

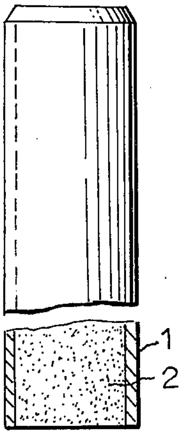

FIG.5

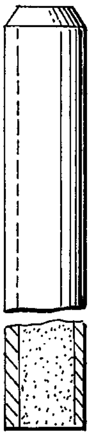
FIG.7

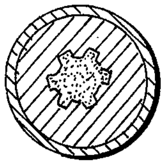
FIG.2


FIG.4

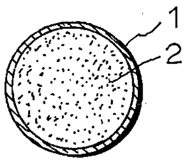

FIG.6

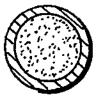
FIG.8


FIG.9


FIG.10


FIG.11


FIG.12

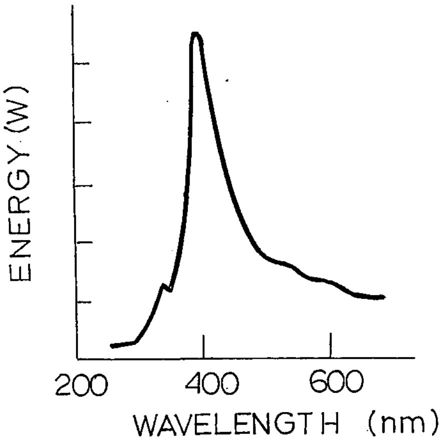
ENERGY (W)
200
400
600
WAVELENGTH (nm)

FIG. 13

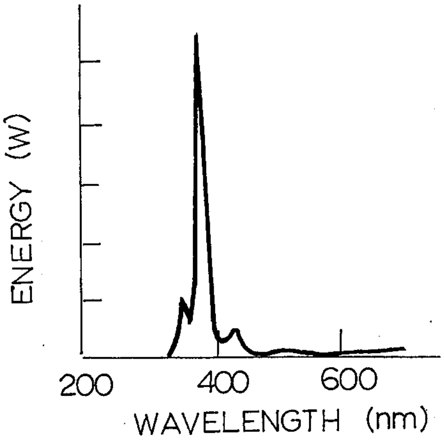
ENERGY (W)
200
400
600
WAVELENGTH (nm)

FIG. 14

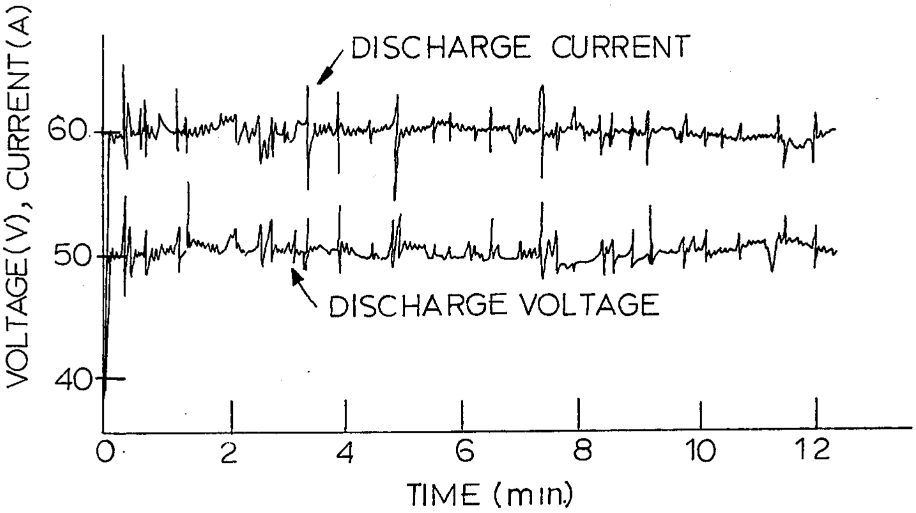
DISCHARGE CURRENT
DISCHARGE VOLTAGE
VOLTAGE (V), CURRENT (A)
60
50
40
0
2
4
6
8
10
12
TIME (min.)

FIG.15

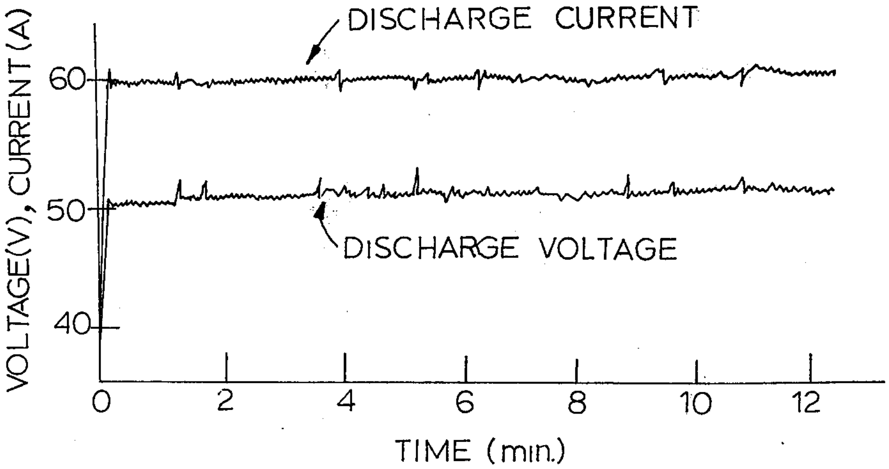
DISCHARGE CURRENT
DISCHARGE VOLTAGE
VOLTAGE(V), CURRENT (A)
60
50
40
0
2
4
6
8
10
12
TIME (min.)

FIG.16

CARBON ELECTRODE FOR EMITTING LIGHT SIMILAR TO SUNSHINE FOR LIGHT-FASTNESS TESTING

This invention relates to electrodes for carbon arc lamps, and more particularly to electrodes for such lamps which can be used in light-fastness and weathering test apparatus and which emit light similar to sunlight.

BACKGROUND OF THE INVENTION AND PRIOR ART

A carbon arc lamp is often used as a light source in weathering and light-fastness tests. Both upper and lower conventional carbon electrodes, for example, those used in tests according to Japanese Industrial Standards (JIS) or the International Organization for Standardization (ISO) (in TC 61: Plastic) have had a core structure. The upper carbon electrode has had a large diameter, for example 23mm and the lower electrode has had a small diameter, 13mm for example. Both carbon electrodes are held in suitable holders and are automatically ignited by a system having a stabilized power source, a detector circuit for detecting the discharge current, and a servo mechanism for automatically adjusting the electrodes to compensate for loss of electrode material, so that light is continuously emitted.

FIGS. 1 and 2 show the structure of a conventional upper carbon electrode described above and FIGS. 3 and 4 show the structure of alower carbon electrode. Both the upper and lower electrodes have a lower structures except for the diameters. A core is provided in the electrodes and has a cross section in a shape similar to a gear, and is an incandescent material. The material around the core is mainly carbon for combustion during discharge of the lamp and contains no incandescent material. The outer surface of the electrode is covered with a copper metal coating, exclusive of the top of the electrode. When current is discharged between two of these electrodes an arc occurs as shown in FIGS. 9 and 10. In FIG. 9 the discharge is shown as taking place between the cores of the incandescent material and in FIG. 10 the discharge is shown as taking place between the portion of the electrodes containing no incandescent material, i.e. the portions radially outwardly of the core. When a continuous discharge takes place, if the discharge is started from core to core, as seen in FIG. 9, the incandescent material contained in the core is consumed gradually as combustion occurs, and a depression is formed in the ends of the electrodes. Then the arc moves and occurs between the carbon portions surrounding the cores and further moves to the outer sides of the electrodes, as seen in FIG. 10. As the outer carbon portions are then consumed, the discharge again returns to the core-to-core discharge position. Such moving of the discharge position is irregular and the discharge voltage and current vary with this moving. Accordingly, the intensity of light changes as the wattage equal to the voltage times the current changes. FIG. 15 shows an example of such a variation of the voltage and current over the course of time.

If the light emitted by this arc is measured using a spectrophotometer for obtaining a spectral composition, continuous curves containing the photoemission spectra of the two types of discharge, are obtained as seen in FIGS. 13 and 14. The spectra of the incandescent material, such as a cerium compound, for example, is as shown in FIG. 13 for the core-to-core discharge. This light contains a large amount of visible light components. In contrast to this, the spectrum of the light from discharge between the outer portions, as shown in FIG. 14, contains only a small amount of visible light components, mainly a cyan band spectrum due to photoemission of the carbon and the nitrogen gas in the atmosphere.

Because light-fastness and weathering test apparatus is used for artificially causing deterioration of material with irradiation which is similar to sunshine in a natural environment, the spectral composition of the light used for this irradiation must be the same as or similar to sunshine, having ultraviolet and visible light components. It is therefore desirable that the light emitted from the carbon electrodes have a spectral composition approximating the sunshine, as shown in FIG. 13, and further that a stable light intensity be provided.

OBJECTS AND BRIEF SUMMARY OF THE INVENTION

An object of this invention is to provide a carbon electrode for emitting light with a spectrum similar to sunshine and which produces an extremely stable discharge with respect to both the spectral composition and intensity of the light emitted from the discharge arc.

These objects are achieved according to the invention by a carbon electrode in which carbon is homogeneously mixed with an amount of an incandescent material in a proportion of 6 to 12 weight percent of the total weight of both said carbon and said incandescent material, and the mixture is molded into the desired electrode shape. A copper metal coating is provided over the electrode, exclusive of the top of the electrode. No core is present in the electrode. Thus, light can be obtained which is extremely stable in both its spectral composition and its intensity during continuous discharge by the photoemission from the incandescent material which is present throughout the electrode despite any variation in the position of the discharge arc between the electrodes of the present invention.

BRIEF DESCRIPTION OF THE DRAWINGS

The invention will now be described in connection with the accompanying drawings, in which:

FIG. 1 is a sectional elevation view of a prior art carbon electrode for producing light simulating sunshine used in the upper section of a conventional arc lamp;

FIG. 2 is a transverse sectional view of the carbon electrode of FIG. 1;

FIG. 3 is a sectional elevation view of a prior art carbon electrode similar to that of FIG. 1, used in the lower section of a conventional arc lamp;

FIG. 4 is a transverse sectional view of the carbon electrode of FIG. 3;

FIG. 5 is a sectional elevation view of a carbon electrode similar to that of FIG. 1 but according to this invention;

FIG. 6 is a transverse sectional view of the carbon electrode of FIG. 5;

FIG. 7 is a sectional elevation view of a carbon electrode similar to that of FIG. 3 but according to this invention;

FIG. 8 is a transverse sectional view of the carbon electrode of FIG. 5;

FIG. **9** is an elevation view showing the arc between the cores of conventional carbon electrodes of FIGS. **1–4;**

FIG. **10** is an elevation view showing the arc between the outer sections of the conventional carbon electrodes of FIGS. **1–4;**

FIG. **11** is an elevation view showing the arc between the outer portions of the carbon electrodes according to this invention;

FIG. **12** is an elevation view showing the arc between the tips of the carbon electrodes according to this invention;

FIG. **13** is a graph of the light spectrum of a luminescent material used in conventional carbon electrodes;

FIG. **14** is a graph of the light spectrum of the arc between the outer sections of the conventional carbon electrodes;

FIG. **15** is a graph of current-voltage variation during discharge of an arc between the conventional carbon electrodes; and

FIG. **16** is a graph of current-voltage variation during discharge of an arc between carbon electrodes according to this invention.

DETAILED DESCRIPTION OF THE INVENTION

Referring to FIGS. **5** through **8,** these show the structure of carbon electrodes according to this invention, FIGS. **5** and **6** showing an upper carbon electrode and FIGS. **7** and **8** showing a lower carbon electrode. The structure of the upper and lower carbons is identical, except for their diameters. A copper or other metal coating **1** is provided on the outside of a carbon material **2** which is composed of carbon for combustion and an incandescent material. The carbon is homogeneously mixed with said incandescent material and molded to the desired shape. The incandescent material is present in a proportion of 6 to 12 weight percent of the total weight of both said carbon and said incandescent material. In these figures, the dotted portions show the mixture including the incandescent material. The carbon for combustion can be carbon black, graphite, or amorphous carbon, for example, and the incandescent material can be cerium fluoride, for example. Furthermore, a trace of stabilizer can be included, if necessary.

If a carbon electrode made as described above is ignited and the spectral composition is observed, the light is always found to include light from the incandescent material, even if the arc moves to any point on the electrodes, as shown in FIGS. **11** and **12,** and light with an extremely stable spectral composition is obtained. The variation in intensity of this light is also extremely small, as shown in FIG. **16,** being less than half that of the prior art carbon electrodes of FIG. **1–4.**

Because a stable light is obtained, a reduction of 10% in the amount of carbon consumed is achieved in comparison with the prior art electrodes.

What is claimed is:

1. A carbon electrode assembly for a carbon arc lamp used for simulating sunlight in light-fastness and weathering testors, said assembly comprising:

a first elongated upper electrode element fitted at one end into said arc lamp;

an elongated second lower electrode element fitted at one end into said arc lamp, the free end thereof being opposite the free end of said first electrode and spaced therefrom;

one of said first and second electrodes being smaller in diameter than the other electrode; and

said upper and lower electrodes each being comprised of a homogeneous mixture of carbon and an incandescent material, said incandescent material being present in an amount from 6 to 12 percent by weight of the total weight of the carbon and incandescent material, and a copper metal coating surrounding the outside of said electrodes other than at the end thereof which is spaced from and opposite the other electrode.

2. A carbon electrode as claimed in claim **1** in which the carbon is taken from the group consisting of carbon black, graphite and amorphous carbon.

3. A carbon electrode as claimed in claim **1** in which the incandescent material is cerium fluoride.

* * * * *

United States Patent [19]

Suga

[11] **4,006,379**

[45] **Feb. 1, 1977**

[54] **CARBON ELECTRODES FOR AN ULTRAVIOLET ARC LAMP FOR USE IN A LIGHT-FASTNESS TESTER**

[76] Inventor: **Shigeru Suga,** Yoyogi 5-20-2,
Shibuya, Tokyo, Japan

[22] Filed: **Dec. 19, 1975**

[21] Appl. No.: **642,359**

[52] **U.S. Cl.** **313/352;** 13/18; 314/60; 313/311; 313/354; 313/355

[51] **Int. Cl.²** **H01J 1/02;** H01J 1/14; H01J 1/38; H01J 1/48

[58] **Field of Search** 313/352, 353, 354, 355, 313/356, 357, 311; 13/15, 16, 18; 314/51, 52, 60

[56] **References Cited**

UNITED STATES PATENTS

1,186,253	6/1916	Wilcox	313/354
2,185,679	1/1940	Parisot	313/354 X
2,229,227	1/1941	Simon et al.	313/354
2,282,533	5/1942	Simon et al.	313/354
3,313,976	4/1967	Lauzau et al.	313/357 X
3,461,339	8/1969	Robiette	313/354 X

Primary Examiner—Saxfield Chatmon, Jr.
Attorney, Agent, or Firm—Wenderoth, Lind & Ponack

[57] **ABSTRACT**

Upper and lower carbon electrodes for an ultraviolet arc lamp used for light-fastness testing. The upper electrode is in the shape of an elongated cylinder, the cross-section of which has an exterior annular portion consisting of a carbonaceous material and an interior core portion consisting of a mixture of a carbonaceous material and potassium sulfate. The upper electrode has dispersed therethrough potassium chloride as a stabilizing agent. The lower electrode is in the shape of an elongated cylindrical tube having a hollow interior and is of a carbonaceous material having a high electrical conductivity and has dispersed therethrough potassium chloride as a stabilizing agent. When the upper and lower electrodes are placed with their ends opposed to each other and an alternating current at 135V and 16A is discharged thereacross, a stable light is continuously produced.

2 Claims, 14 Drawing Figures

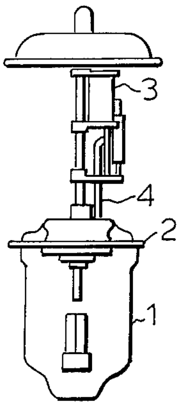

(PRIOR ART)

FIG.1

(PRIOR ART)

FIG.2

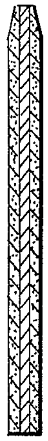

(PRIOR ART)

FIG.3

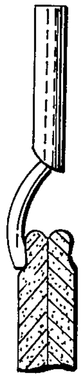

(PRIOR ART)

FIG.4

(PRIOR ART)

FIG.5

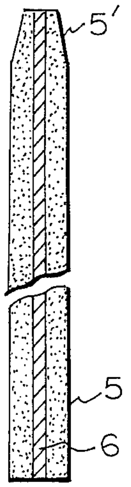

FIG.6a

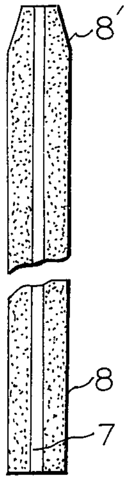

FIG.7a

FIG.8

FIG.9

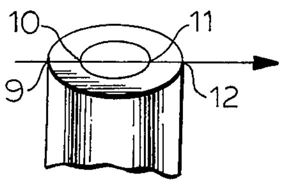

FIG.10

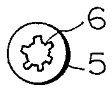

FIG.6b

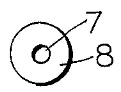

FIG.7b

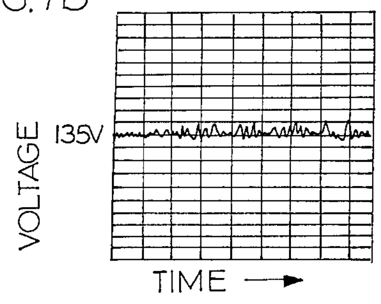

FIG.11

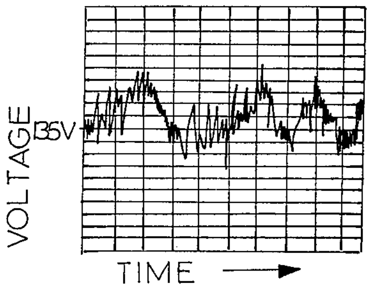

FIG.12

CARBON ELECTRODES FOR AN ULTRAVIOLET ARC LAMP FOR USE IN A LIGHT-FASTNESS TESTER

This invention relates to an improvement in carbon electrodes for an ultraviolet arc lamp for use in a light-fastness tester.

BACKGROUND OF THE INVENTION AND PRIOR ART

A typical structure of a conventional carbon arc lamp is illustrated in FIG. **1**. As shown, two carbon electrodes are secured to a lower electrode holder, and one carbon electrode is secured to an upper electrode holder movable in a vertical direction inside the air-tight lamp housing consisting of a light-transmitting glass glove **1** and a substrate board **2**. The upper electrode can be ignited and controlled by an iron core inside an electromagnetic coil **3** and a carbon suspension member **4** associated with said iron core.

Generally, the upper carbon electrode has a length of about 305mm and a diameter of about 13mm, and is either a core type or a coreless type. To make the lower carbon electrodes, a 305mm long carbon electrode, such as is used for the upper carbon electrode, has two lengths of 100mm cut therefrom, and the two thus formed electrodes are used as the lower carbon electrodes. The two electrodes are discharged alternately for a continuous combustion period of from about 20 to 22 hours.

As shown in the sectional views of FIGS. **2** and **3**, the conventional carbon electrode has been either a coreless type (FIG. **2**) or a core type (FIG. **3**). The coreless type electrode is made predominantly of an amorphous carbonaceous material, such as carbon black or the like, whereas the core type electrode uses the above-mentioned amorphous carbonaceous material for the exterior cylindrical section and a mixture of a stabilizing agent, such as potassium phosphate and the amorphous carbonaceous material for the interior core section.

A piece of material to be tested is mounted on a frame which rotates slowly around the arc lamp, and the piece of material is continuously irradiated by ultraviolet rays from the lamp over a period of several hundred hours to determine the light-fastness thereof.

Since the conventional carbon electrode has a life of only about 20–22 hours for continuous lighting, it would be desirable to extend this life to at least twice this time.

It is evident that if the length or the diameter of the carbon electrodes was increased, the combustion time could naturally be extended. An increase in the length of the carbon electrodes, however, is not economical because it also increases the overall dimension of the lamp apparatus. Although an increase in the diameter of the carbon electrodes does not cause any substantial change in the overall dimensions of the apparatus, stabilized light cannot be obtained if the diameter of the conventional carbon electrodes is increased unless the material is also changed. As shown in FIG. **4**, for example, carbon electrodes having such an enlarged diameter do not always discharge from the tip thereof, but instead may discharge from the peripheral portion spaced from the tip. Likewise, the wearing of the carbon electrodes is not always uniform.

In the light of the teachings of my copending U.S. patent application Ser. No. 598,076 filed July 22, 1975, one of ordinary skill in the art would perhaps attempt to replace the carbon electrodes of the conventional lamp with upper and lower carbon electrodes which incorporate a mixture of a carbonaceous material and an illuminating agent as the core. When such carbon electrodes are used in practice in an ultraviolet arc lamp, however, discharge is effected from points spaced from the tip of the upper electrode as shown in FIG. **5**. Thus, the discharge of this type of arc lamp has been found to be very unstable in practice.

Presumably this unstability results from the fact that because the carbon in said electrodes in said copending application is for use in an arc lamp for producing light similar to sunshine, and the carbon is burned in an atmosphere wherein oxygen is present, the carbon in the electrodes of the present invention is for use in an arc lamp for producing ultraviolet light, and hence, the combustion takes place in the absence or substantially complete absence of oxygen.

OBJECTS AND BRIEF SUMMARY OF THE INVENTION

The primary object of the present invention is to stabilize the discharge of carbon electrodes in a light-fastness tester and increase the combustion time of the electrodes to at least twice the life of conventional electrodes.

Another object of the present invention is to improve the life of the electrodes by adding a particular type of stabilizer and disposing a hollow core section at the central portion of the lower electrode such that evaporation of the stabilizer causes convection resulting in stabilization of the discharge of the electrode.

These objects achieved in accordance with the present invention by impregnating and dispersing a stabilizing agent in both the upper and lower carbon electrodes. The upper carbon electrode having the stabilizer impregnated and dispersed therein has a core section while the lower carbon electrode also having the stabilizer impregnated and dispersed therein has a hollow hole along the longitudinal axis thereof. The upper electrode having the core section and the lower electrode having the hole cause the stabilizer to exhibit its action most effectively and afford a stabilized discharge, and hence stabilized radiation for a longer period of time than with conventional electrodes.

BRIEF DESCRIPTION OF THE FIGURES

The invention will now be described in greater detail in connection with the accompanying drawings, in which:

FIG. **1** is a schematic elevation view of a conventional ultraviolet arc lamp for use in a light-fastness tester;

FIGS. **2** and **3** are sectional views of conventional prior art carbon electrodes;

FIG. **4** is a schematic view showing the discharge between conventional prior art carbon electrodes;

FIG. **5** is a schematic view showing the discharge between prior art carbon electrodes for producing radiation simulating sunshine;

FIG. **6***a* is a longitudinal sectional view of an upper carbon electrode in accordance with the present invention;

FIG. **6***b* is a transverse sectional view thereof;

FIG. 7*a* is a longitudinal sectional view of a lower carbon electrode in accordance with the present invention;

FIG. 7*b* is a transverse sectional view thereof;

FIGS. **8** and **9** are schematic views showing the discharge between the carbon electrodes of the present invention;

FIG. **10** is a schematic perspective view showing the end of the lower electrode of the present invention;

FIG. **11** is a graph showing discharge voltages of the carbon electrodes of the present invention; and

FIG. **12** is a graph showing discharge voltages of conventional carbon electrodes.

DETAILED DESCRIPTION OF THE INVENTION

FIGS. 6*a*, 6*b*, 7*a* and 7*b* illustrate the structure of the carbon electrodes in accordance with the present invention.

FIGS. 6*a* and 6*b* illustrate the upper electrode. The exterior carbonaceous cylindrical portion **5** is made of a carbonaceous material such as, for example, carbon black, and has a predetermined size, e.g. an outer diameter of 23mm, while the interior core portion **6** has a gear-like cross-sectional shape. After the exterior portion **5** of the upper electrode is shaped by baking so as to have a hollow core, a core material consisting of a mixture of the abovementioned carbonaceous material, e.g. carbon black, and potassium sulfate is poured into the hollow core, and the electrode is again baked to form the core portion **6** within the exterior portion **5.** Subsequently, a potassium chloride aqueous solution (having a concentration of 10 g/l is impregnated into the electrode to act as a stabilizing agent, and the electrode is then baked once again in order to disperse the stabilizer throughout the electrode. As a result of this process, a typical upper electrode according to the invention has about 61 gm. carbonaceous material and from 0.18 to 0.10 gm of potassium chloride, or about 0.32 to 0.06% by weight potassium chloride.

FIGS. 7*a* and 7*b* show the lower electrode which is formed by shaping a carbonaceous material having a good electric conductivity, such as graphite, into a cylindrical member **8** and then baking the same. Thereafter, the electrode is immersed in a potassium chloride aqueous solution (having a concentration of 15 g/l) as a stabilizing agent until the stabilizer disperses sufficiently inside the electrode. As a result of this process, a typical lower electrode according to the invention has about 42 gm carbonaceous material and from 0.13 to 0.07 gm. of potassium chloride, or about 0.32 to 0.06% by weight potassium chloride. The electrode has an outer diameter of about 18.5mm, and a hollow core **7** having a diameter of about 1–2mm. The tips **5'** and **8'** of the electrodes are tapered in order to facilitate the discharge at the initial stage, but the tip need not always be tapered.

One each of the abovementioned lower and upper electrodes are mounted in the lamp device shown in FIG. **1.** Since the diameter of the carbon electrodes and the number of electrodes used in the present invention are different from the conventional device, the holder section is modified in the present invention to accept the abovementioned upper and lower electrodes.

FIGS. **8** and **9** illustrate the discharge produced with the electrodes of the present device. In FIG. **8,** the discharge is shown as being produced between the core section of the upper electrode and the hollow core of the lower electrode to thereby produce a stabilized illumination which varies hardly at all. As the electrodes are consumed gradually, the upper electrode still keeps discharging from the core section, while the discharge from the lower electrode shifts from the center to the periphery, as shown in FIG. **9,** smoothly and producing a stabilized discharge in the same manner as when the discharge is at the center. Thereafter, the discharge from the lower electrode moves back to the central position from the periphery. This procedure is repeated continuously.

As shown in FIG. **10,** the lower electrode has exterior peripheral portions **9** and **12** and interior peripheral portions **10** and **11** aligned in the transverse direction thereof (indicated by the arrow). In comparison with the conventional solid lower electrode having only two peripheral portions, the lower electrode in accordance with the present invention has four peripheral portions, as described above. For this reason, wearing of the electrode at only one peripheral portion or abnormal wearing can be eliminated effectively by the present electrode.

The operation of the electrodes in accordance with the present invention was compared with conventional electrodes by effecting discharge at a predetermined current of **16A,** and the changes in the discharge voltage were measured. The results of the experiments are shown in FIGS. **11** and **12.** FIG. **11** shows the voltage change observed with the present electrodes. As can be seen, the electrodes of this invention produce a fluctuation in voltage of only about 1% at a reference voltage of 135V. In contrast therewith, the conventional electrodes produce a fluctuation of several percent.

The reason the discharge in the present device is extremely stable is not fully understood. However, the inventor believes that the stability can perhaps be explained by the fact that the stabilizer impregnated into and dispersed in the electrode evaporates and changes to a gas at a high temperature, and creates an atmosphere of the gas thus formed, in which the discharge is effected. Likewise, the flow of the stabilizer gas passing through the hollow core of the lower electrode acts favorably for the discharge.

Thus, with electrodes in accordance with the present invention, a well stabilized discharge illumination can be produced continuously over a period of 50 hours by the use of carbon electrodes which in terms of size have only an enlarged outer diameter compared with the outer diameter of conventional carbon electrodes in general.

What is claimed is:

1. Carbon electrodes for an ultraviolet arc lamp used for light-fastness testing, said electrodes comprising:

an upper electrode in the shape of an elongated cylinder about 23 mm. in diameter, the cross-section of which has an exterior annular portion consisting of a carbonaceous material and an interior core portion consisting of a mixture of a carbonaceous material and potassium sulfate, the upper electrode having dispersed therethrough potassium chloride as a stabilizing agent; and

a lower electrode in the shape of an elongated cylindrical tube about 18.5 mm. in diameter and having a hollow interior about 1–2 mm. in diameter and being of a carbonaceous material having a high electrical conductivity and having dispersed therethrough potassium chloride as a stabilizing agent;

whereby when the upper and lower electrodes are placed with their ends opposed to each other and an alternating current at 135V and 16A is discharged thereacross, the discharge can be maintained stably for more than 50 hours and a stable light is continuously produced.

2. Carbon electrodes as claimed in claim **1** in which potassium chloride is present in an amount of from 0.32 to 0.06% by weight of the carbonaceous material.

* * * * *

United States Patent [19]

Frolov

[11] **4,122,294**

[45] **Oct. 24, 1978**

[54] **METHOD OF AND DEVICE FOR FORMING SELF-BAKING ELECTRODE**

[76] Inventor: **Jury Fedorovich Frolov,** M. Muranouskaya ulitsa, 11, korpus 1, kv. 29, Moscow, U.S.S.R.

[21] Appl. No.: **755,041**

[22] Filed: **Dec. 28, 1976**

[51] **Int. Cl.^{2}** **H05B 7/09**

[52] **U.S. Cl.** .... **13/18 R**

[58] **Field of Search** 13/18; 313/327

[56] **References Cited**

U.S. PATENT DOCUMENTS

1,442,033	1/1923	Sem et al.	13/18
3,524,004	8/1970	Van Nostran et al.	13/18 X
3,619,465	11/1971	Cavigli	13/18
3,624,261	11/1971	Cavigli	13/18

Primary Examiner—R. N. Envall, Jr.

Attorney, Agent, or Firm—Lackenbach, Lilling & Siegel

[57] **ABSTRACT**

The method of forming a self-baking electrode consists of filling an electrode mass under pressure into a permanent current-carrying shell during melting in an electric furnace. The electrode mass is fed, according to the invention, in compliance with data obtained by continuous measuring of the temperature of the electrode being formed at several points along its height and in its cross-section, at a rate which is proportional to that of the electrode coking, shifting and burning-off.

The device for realizing said method, comprises a charge-loading passage which is made in the form of a pipe, a permanent current-carrying mould communicating with a mass-feeding passage having presses fitted over it, an electrode drive mechanism and thermoelements for measuring the temperature of an electrode being shaped. According to the invention, the mass-feeding passage is formed by pipes arranged around said charge-loading pipe and secured to said electrode drive mechanism, said mass-feeding pipes each accommodating an individual press.

8 Claims, 9 Drawing Figures

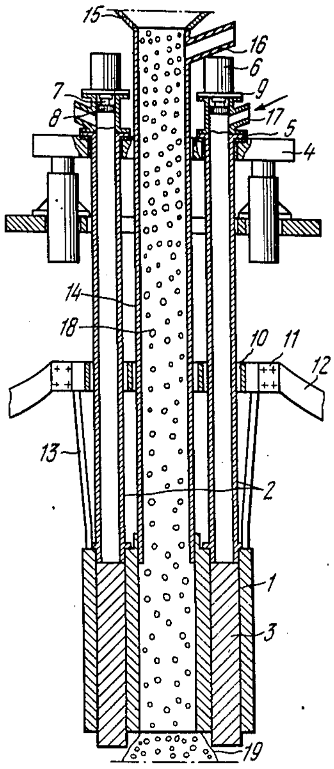

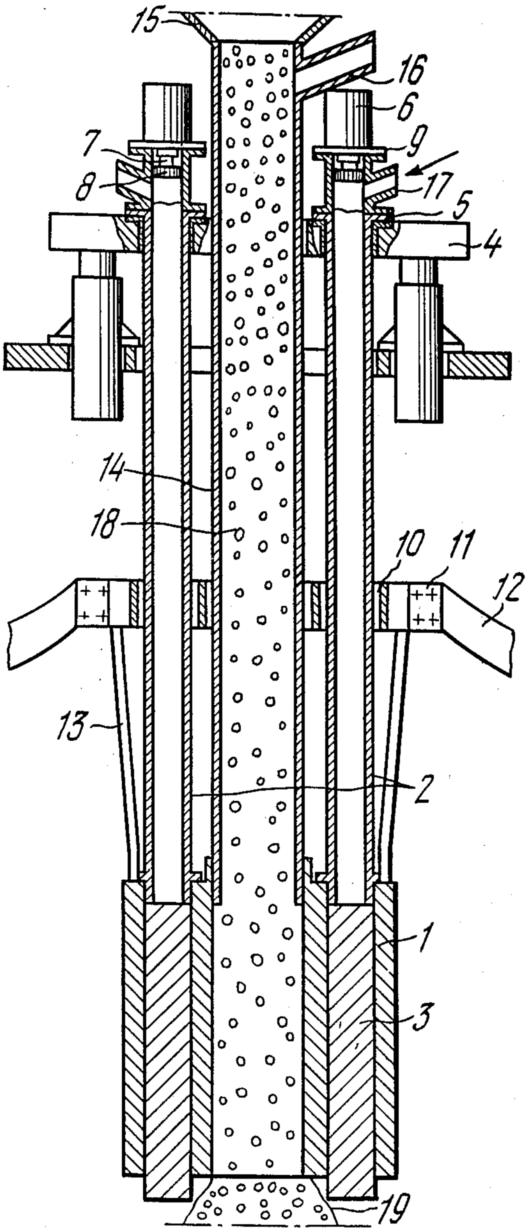

FIG. 1

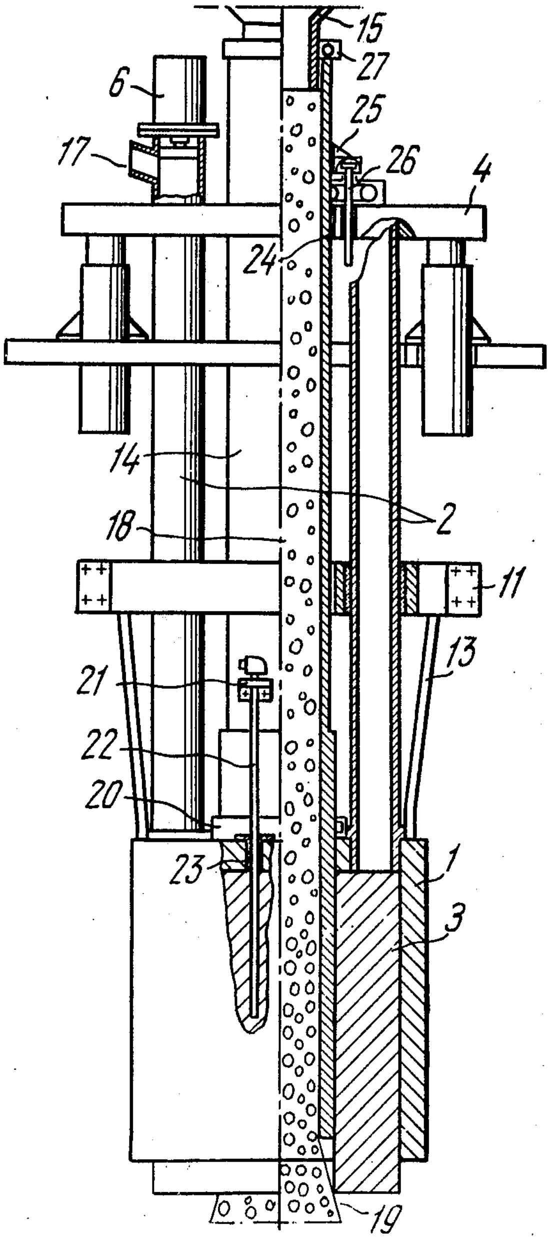

FIG. 2

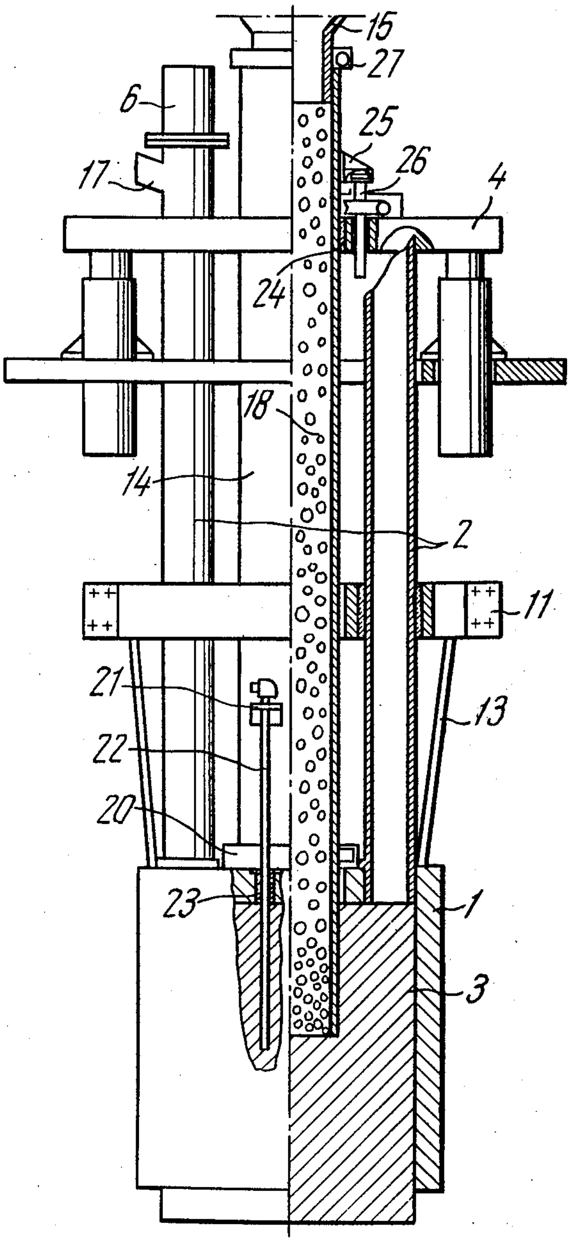

FIG. 3

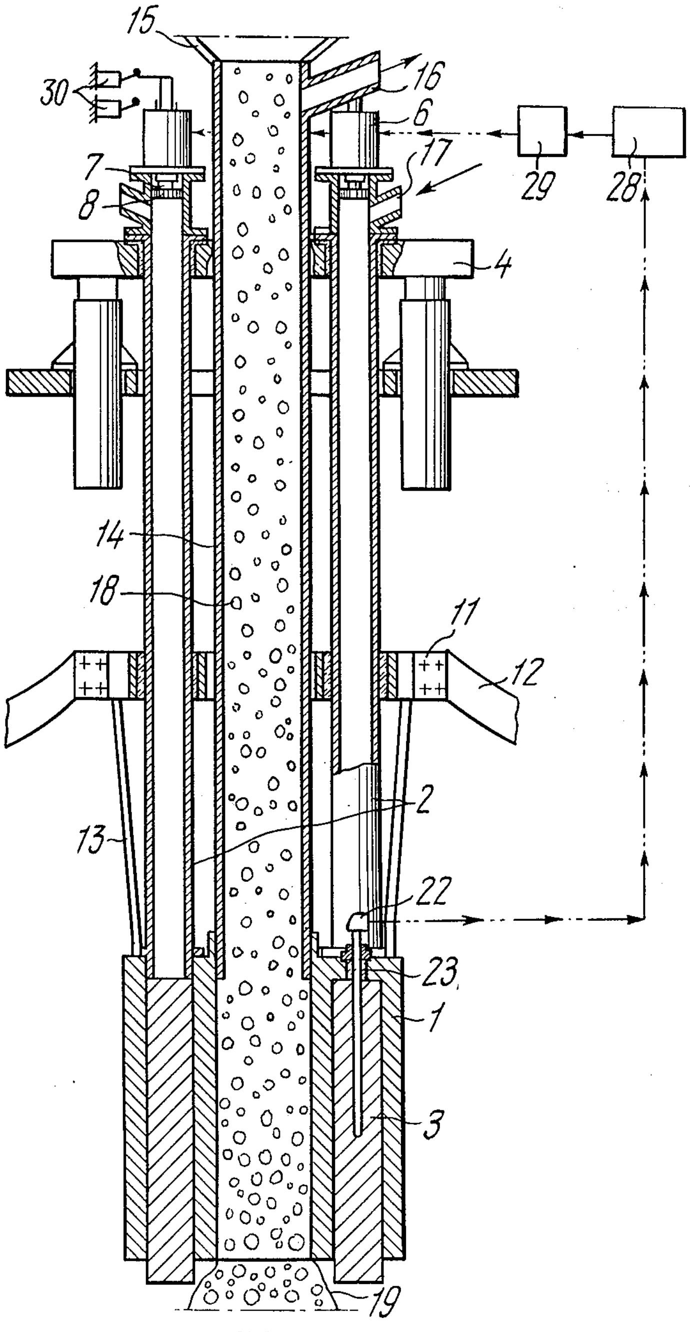

FIG. 4

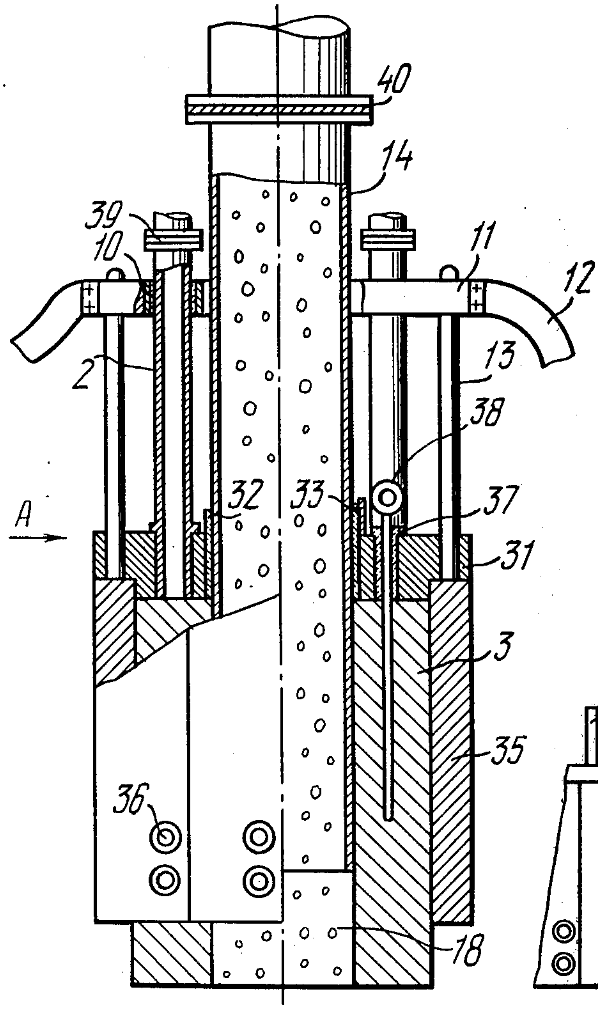

FIG.5

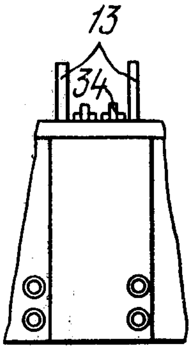

FIG.6

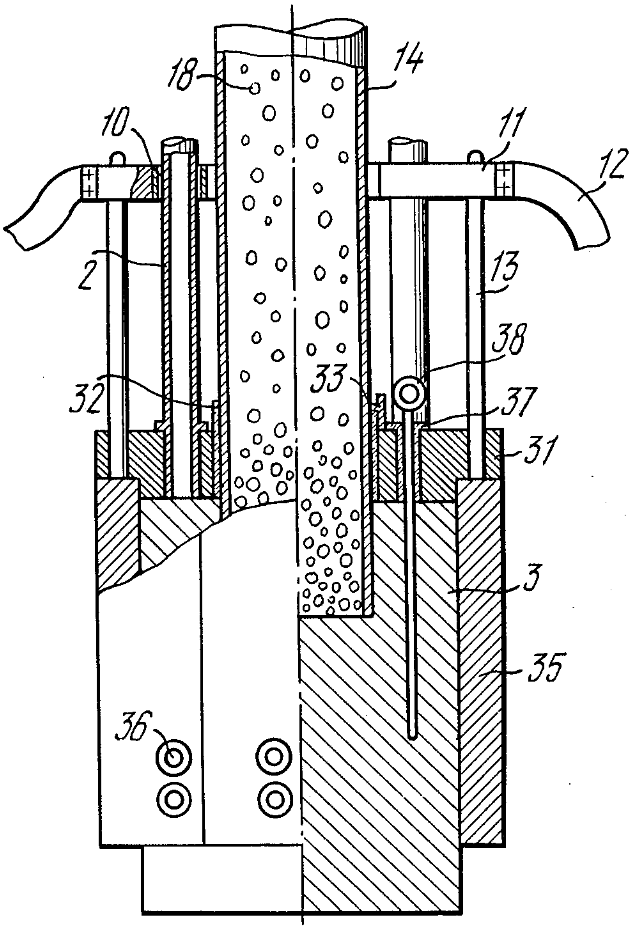

FIG. 7

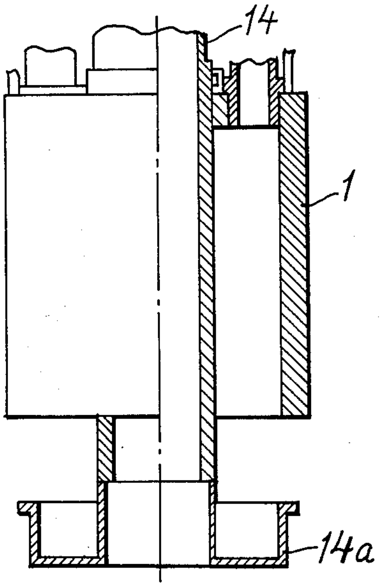

FIG. 8

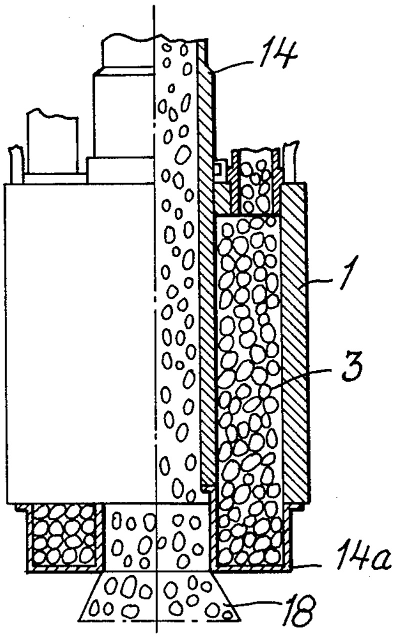

FIG. 9

METHOD OF AND DEVICE FOR FORMING SELF-BAKING ELECTRODE

FIELD OF THE INVENTION

The present invention relates to electrothermics and, more particularly, to a method of forming a self-baking electrode and a device for effecting same. It is most advantageous in ferrous and nonferrous metallurgy, chemistry and other industries using electric furnaces with self-baking electrodes.

Further progress of ore electrothermics is closely associated with the problem of developing advanced types of electric furnace equipment and simultaneously improved methods of operation thereof, which insure higher productivity, cut down the net cost and improve the occupational health conditions of service personnel.

DESCRIPTION OF THE PRIOR ART

Known in the prior art is a method of forming a continuous self-baking solid- or hollow Søderberg electrode, wherein an electrode mass is filled into a metallic casing where it undergoes a process of gradual transformation into four aggregate states as the electrode is being baked.

Thus, in the top part of the electrode the charged electrode mass (at a temperature of 0° to +70° C.) is present in the form of separate solid lumps or aggregates. In the underlying layer (at a temperature of from +70° C. to +360° C.) the electrode mass changes gradually into the next aggregate state and becomes pasty. Next at the entry of and in the electric-contact unit zone proper (at a temperature varying within +360°-+400° C.), the electrode mass changes from a liquid state into a non-plastic state (a coking zone). Further on, in the lower part of the electric-contact unit (at a temperature of from +400° to +500° C.), the mass reaches its baking stage and changes into a solid and forms a solid electrode structure. Characteristic of the sintered electrode mass is a sharp reduction in electrical resistance along with an abrupt increase in its electric conductivity. With the roasting process of the self-baking Søderberg electrode proceeding normally, mass feeding, required for continuous forming of an electrode to compensate for its burning-off, is effected together with the metallic casing by means of special devices holding and shifting the casing with the mass (i.e. the electrode as a whole). These three processes — consuming (burning-off), roasting and shifting of the electrode to make up for its burning-off — are carried out independently. In the ideal case with the Søderberg electrode all the three processes must proceed at the same time and be stable.

However, owing to a number of causes pertaining to variations (disturbances) in the course of the production process and caused, for example, by changes in the composition of raw materials, by charge proportioning etc., by electrical characteristics of the furnace owing, e.g., to fluctuations in bath resistance, variations in the quality of an electrode mass and its nonuniform structure (i.e., nonuniform distribution of its constituents), imperfect design of an electric-contact unit and devices for mechanical shifting of the electrode, as well as those caused by the skin and "proximity" effects, when using the now-existing method of forming a self-baking electrode, these processes are not accomplished simultaneously and lack stability. Various attempts at improving the above-outlined method result, at best, in two of the three processes being effected at the same time, e.g., that of burning-off the electrode and its lowering to compensate for its burning-off, the roasting process not being, however, accomplished simultaneously with the above processes.

The asynchronous and unstable nature of these processes leads to the following serious disadvantages peculiar to the now-existing method of forming a continuous self-baking Søderberg electrode.

If the burning-off process precedes the roasting process and is in step with the shifting of the electrode to compensate for its burning-off, the electrode coking zone drops down below the level of the electric-contact unit jaws and an electric current flows only through the metallic casing (the liquid electrode mass being actually non-conductive) with a quite real risk of "wet" breakage of the electrode and of the electrode mass flowing out thereof.

If, on the other hand, the burning-off of the electrode proceeds at a lower rate than roasting, the process of shifting the electrode to make up for its burning-off, carried out in step with the first process, fails to prevent the electrode coking zone from rising above its optimum level or above the top edge of the electric-contact unit jaws. As a result, an over coked part of the electrode will crumble and a "dry" breakage will follow.

With the present-art method of forming an electrode a certain quite possible combination of the above processes may lead to a situation where electrode burning-off and its roasting are effected sufficiently simultaneously, the process of shifting the electrode (its lowering to offset burning-off) however, is not accomplished in step.

The above phenomenon is encountered rather frequently, even now, both when using Wisdom's brakes and now in use mechanisms adapted for holding and shifting the electrode and comprising two brake rings, and with the slipping of electrodes which takes place in practice regardless of the design of said shifting mechanism.

On any of the above-outlined occasions the breakage of an electrode causes a higher consumption of an electrode mass and electric energy, increases furnace downtime and lowers furnace efficiency.

Known as well in the art is a number of devices for forming a solid- or hollow self-baking electrode.

Thus, a prior-art device for forming a self-baking electrode comprises a charge-loading pipe, a permanent current-carrying mould of a hollow self-baking electrode, communicating with a mass-feeding passage fitted over with presses, and an electrode drive mechanism.

The permanent current-carrying mould is a double-wall die with an opening facing the furnace interior, said die being secured together with a current lead to a supporting casing which is in extension of the electrode being formed and is coupled by its top part with the electrode drive unit. To enable continuous forming of an electrode and its discharge from the mould, the top part of the permanent current-carrying mould is fitted with openings for feeding a thin electrode mass and with a feedstock means in the form of an annular piston cylinder. To reduce the length of the current lead a current-distribution attached to the supporting casing is mounted above the permanent current-carrying mould.

However, characteristic of said device for forming a self-baking electrode is a highly sophisticated construction, a need for using only a thin mass which is introduced directly into current-carrying mould. Moreover, it fails to ensure an adequate pressure on the electrode mass through which an electrode structure has a lower density during its baking.

The disadvantage of the above device revealed in forming a hollow self-baking electrode resides in that it does not afford the possibility of displacement of the charge-loading pipe which is adapted for defining a central opening in the electrode, a feature which, on the one hand, diminishes service life and reliability of said pipe and, on the other hand, may, in case of pipe burning with the ensuing disturbance of the production process and electrode coking conditions, deteriorate the integrity of a hollow self-baking electrode both along its height and in the cross-section, with the electrode mass flowing out thereof. This may adversely affect the quality of the electrode and lead to a sharp increase in its consumption or cause its breakage.

The above phenomena results in additional consumption of electric energy and electrode mass and in a lower electric furnace efficiency.

SUMMARY OF THE INVENTION

The main object of the present invention is the provision of simultaneous and stable processes of roasting, burning-off of an electrode and shifting the electrode to compensate for its burning-off.

Another object of the invention is to improve the quality of the electrode.

Still another object of the invention is to reduce the electrode mass and the electric power consumption.

Yet another object of the present invention is to provide a higher efficiency of the electrode forming process.

A further object of the invention is to preclude irregular roasting and shifting of the electrode to compensate for its burning-off and its nonuniform burning-off both along height and in the cross-section, for instance, due to the skin and proximity effects.

These and other objects are achieved by a method of forming a self-baking electrode, according to the invention, consisting of filling an electrode mass into a current-carrying mould, in compliance with data obtained by continuous measuring of the temperature of the electrode being formed at several points along its height and in the cross-section thereof, at a rate which is proportional to that of electrode, coking, shifting and burning-off.

To preclude irregular roasting of the electrode mass, it is advisable that the mass be fed into the coking zone by alternating its operation mode.

It is also good practice that fluxing and/or alloy additives be introduced into the electrode mass while forming a self-baking electrode.

A device for realizing said method of forming a self-baking electrode, comprises a charge-loading means, e.g., a pipe, a permanent current-carrying mould for shaping a self-baking electrode, communicating with a mass-feeding passage having presses fitted over it, an electrode drive mechanism and thermoelements for measuring the temperature of the electrode being formed, according to the invention, the mass-feeding passage is defined by pipes arranged around said charge-loading pipe and fastened to he electrode drive mechanism, said pipes each accomodating a press.

For use as said thermoelements, it is preferable that temperature-sensitive elements embedded in the electrode mass should be employed.

For forming a hollow self-baking electrode it is preferable that the charge-loading pipe be furnished with an individual drive means associated with the temperature-sensitive elements mounted on said pipe.

For use as said individual drive means, use may be made of a screw jack provided with an electromechanical drive mechanism.

To improve the quality of the electrode being formed and to provide more stable furnace operating conditions, the herein-proposed device is preferably equipped with a programming control unit whose input must be coupled with said temperature-sensitive elements and whose output is coupled with the presses.

To enable dependable and trouble-free operation of the permanent current-carrying mould adapted for forming a self-baking electrode, it is preferable that a connecting ring be fastened to the mass-feeding pipes. The ring has connected to it by means of a lock joint, water-cooled electric contact elements made in the form of plates. The plates are also in a lock joint arrangement, said (plates) being detachably interconnected.

The bottom part of said charge-loading pipe can be cooled by fitting it with internal conduits for the passage of a water-air mixture and with a means for adjusting its flowrate.

It is of value if an insulating guide sleeve acting at the same time as a packing is mounted and secured in the passage for said charge-loading pipe.

The current-carrying mould can be furnished with feelers inserted periodically inside said mould in the electrode coking zone through insulating packings set up in the connecting ring at several points along the circumference and in the cross-section of the electrode.

As compared with the best achievements in this field, the herein-proposed method of and device for forming a self-baking electrode assure:

(a) up to a 70% reduction in electric energy consumption;

(b) at least a 30% reduction in electrode mass requirements;

(c) up to 20–25% of fine charge fractions, including those in a 10 mm range; and

(d) efficient waste-heat recovery of exhaust gases.

BRIEF DESCRIPTION OF THE DRAWINGS

The nature of the invention will be clear from the following detailed description of a method of and particular embodiments of a device for forming a self-baking electrode, to be had in conjunction with the accompanying drawings, in which:

FIG. 1 is a longitudinal, cross sectional view of a device for forming a self-baking electrode, according to the invention;

FIG. 2 is a longitudinal partly in section, view of another embodiment of a device for forming a self-baking hollow electrode, according to the invention;

FIG. 3 is a longitudinal, partly in section, view of another embodiment of a device for forming a self-baking solid electrode, according to the invention;

FIG. 4 is a longitudinal, cross sectional view of an embodiment of a device for forming a self-baking electrode, which is equipped with a programming follower, according to the invention;

FIG. 5 is a longitudinal, cross sectional view of a permanent current-carrying shell of a device for forming a self-baking hollow electrode, according to the invention;

FIG. 6 is a end view of the device shown in FIG. 5 taken in the direction of arrow A;

FIG. 7 is a longitudinal, crosssectional view of a permanent current-carrying mould of a device for forming a self-baking solid electrode, according to the invention; and

FIG. 8 is a longitudinal, partly in section, view of the embodiment shown in FIG. 2, with the charge loading pipe in its lowest position; and

FIG. 9 is a longitudinal, partly in section, view of the embodiment shown in FIG. 2, when the stopper is in contact with the bottom edge of the mold.

The herein-proposed method of forming a self-baking electrode consists of the following. An electrode mass is filled into a mass-feeding passage and is then squeezed into a permanent current-carrying mould, wherein the electrode mass undergoes coking and is transformed into a solid structure under the effect of an electric current (Joule heat) and the heat absorbed along the electrode, due to its heat conductivity, from a furnace hearth.

The mass pressure within said current-carrying mould is developed, firstly, owing to the relatively negligible weight of the mass columns in the mass-feeding passage and, secondly, due to a considerable positive pressure exerted on the electrode mass by pressing. According to a well-known law of physics, the same positive pressure is exerted on the electrode mass in a coking zone in all the directions within the permanent current-carrying mould which, on the one hand, promotes the production of a dense and quality electrode, and, on the other hand, is a major factor in ensuring the forcing (shifting) of said electrode out of the mould as it is being coked and burnt.

As to the feeding of the electrode mass into the current-carrying shell, it is carried, in accordance with data obtainable by continuous measurement of the temperature of the electrode being formed at several points along its height and in the cross-section thereof, at a rate which is proportional to that of electrode coking, shifting and burning-off.

For uniform baking of the mass both along the electrode height and over its cross-section at a certain instant, a command signal is delivered to simultaneously start all presses compacting the electrode paste.

In the event of irregular baking of the mass within the current-carrying mould along the electrode height and over its cross-section, e.g., in a three-phase three-electrode system, with the electrodes being located at the apexes of an equilateral triangle, due to the skin and proximity effects, a command signal is generated at a given moment for putting individual presses into operation in a selective mode.

With the above-outlined method, alloy and/or fluxing additives can be introduced through the central part of the electrode being formed. Thus, melt alloyage and its refining, as well as bringing the chemical composition of the resultant products to a preset value, can be effected simultaneously with the melting of material, thereby assuring a lower consumption of the alloying elements by reducing their losses by burning.

Industrial effectiveness of the proposed method is preconditioned by a need for introducing into industry electric furnaces furnished with devices for forming solid- and hollow-electrodes without casings, such as, calcium carbide or ferro-alloy electric furnaces, as well as those adapted for production processes where the iron casing of a conventional self-baking electrode will damage the quality of a final product, e.g., aluminium-silicon, silicon, metal manganese, etc.

According to the preferable embodiment of a device for carrying into effect the above-outlined method of forming a self-baking electrode, shown in FIG. 1, the device comprises a permanent current-carrying mould **1** communicating with a mass-feeding passage formed by pipes **2**. Depending on the size of the formed electrode **3** three, four or more pipes **2** may be used. In case three pipes **2** are employed, they are arranged at an angle of 120° with respect to each other (at the apexes of an equilateral triangle); if a four-pipe system is used, the pipes **2** are located at an angle of 90° (at the apexes of a square). Similarly, other multipipe systems have the pipes equally spaced. At their top the mass-feeding pipes **2** are coupled by means of electrical insulation **5** to a drive means **4** for shifting an electrode **3**. Fastened to the top part of each mass-feeding pipe **2** are presses **6**, each of which having a connecting rod **7** and a piston **8**. The presses are coupled with the mass-feeding pipes **2** by means of electrical insulation **9**. The current distribution ring **11** of a current lead **12** is coupled to the mass-feeding pipes **2** with electrical and heat insulation **10**, said ring **11** being connected by a water-cooled tubular busbar **13** to the current-carrying mould **1**. The device also comprises a charge-loading pipe **14** around which the mass-feeding pipes **2** are arranged and whose bottom part is in communication with the current-carrying mould **1**. At its top the pipe **14** is insulated electrically and secured to the drive means **4** for shifting the electrode **3**; it is also coupled with a hopper **15** and fitted with a gas offtake **16**.

To decrease electric losses in the metal structures, the sections of the mass-feeding pipes **2** and the charge-loading pipe **14** positioned near the current-carrying elements, namely the current distribution ring **11**, the current lead **12** and the water-cooled tubular busbar **13**, are made of materials with a low permeability, e.g., nonmagnetic steel.

The herein-proposed device operates in the following manner.

The electrode mass (in a solid or liquid state) is fed through branch pipes **17** of each press **6** in a known manner (e.g., through pipelines, vibration hoses, by screw conveyors, etc.) from a the hopper (not shown in the drawing) first into the mass-feeding pipes **2** and then to the permanent current-carrying mould **1**, where under the effect of an electric current and heat inflow from a furnace hearth (bath) the hollow electrode **3** is formed and baked. The electric current flows into the current-carrying mould **1** through the water-cooled tubular busbars **13** from the current distribution ring **11** of the current lead **12**, which is coupled with a furnace power supply (not shown in the drawing).

Under the effect of compressed air or pressurized liquid the presses **6**, acting simultaneously or individually after a certain period of time, compact the electrode mass, forcing it gradually out of the mass-feeding pipes **2** into the permanent current-carrying mould **1**. The presses are controlled by a manual or an automatic control system. The constant pressure of the electrode mass is sustained due to the height or amount of it in the mass-feeding pipes **2**. Under the pressure of the electrode mass the baked hollow electrode **3** is squeezed out of said current-carrying mould **1**. Charged particles **18** pass from the hopper **15** along the charge-loading pipe **14** into a furnace hearth **19** (bath) directly under electric arcs, that are arcing on the end face of said hollow electrode **3**. A hot gas travels up from the furnace hearth **19** along the charge-feed pipe **14**, transmits a considerable part of its heat to the charge **18**, and escapes through the gas offtake **16**.

The gas can flow in an opposite direction through the same charge-loading pipe **14**; if such is the case, use may be made of a gas being collected from the electric furnace (e.g., from the gas offtake in a furnace roof) or of some other gas (for instance, natural or inert ones).

The entire device with the hollow electrode **3** is transferred under the effect of an automatic power controller (not shown in FIG. **1**) by means of the drive means **4** for shifting an electrode **3**, said drive means being either of the hydraulic (as shown in the drawing) or, e.g., electromechanical — a screw or a rope winch — or of some other type. In forming the electrode **3** the temperature of the electrode mass within the current-carrying mould **1** is monitored by temperature-sensitive elements or feelers (not shown in FIG. **1**).

Another embodiment of the proposed device, presented in FIG. **2**, comprises a permanent current-carrying mould **1** for producing a hollow self-baking electrode **3**, mass-feeding pipes **2** having lower portions communicating with said current-carrying mould **1** and top portion interconnected with a drive means **4** for shifting an electrode **3**.

The top part of the mass-feeding pipes **2** has presses **6** secured to it.

A charge-loading pipe **14**, forming an inner wall of the current-carrying mold **1**, is inserted thereinto with an insulating packing **20** set up on said current-carrying mould **1**.

Secured to the charge-loading pipe **14** along its circumference are temperature-sensitive elements **22** set up on brackets **21** and inserted into the electrode coking zone within the current-carrying mould **1** with insulating packings **23** at several points along the height and in the cross-section of the self-baking electrode **3** being formed.

The top part of said charge-loading pipe **14** passes through an insulating guide sleeve **24** built in the drive means **4** for shifting an electrode **3** and is interconnected therewith by brackets **25** by means of screw jacks **26**.

Depending on the adopted production process, either the entire charge-loading pipe **14** is made of a high-temperature wear-resistant material, such as, steel, titanium, etc., or only its bottom portion introduced into the current-carrying mould **1** is fabricated of said materials.

In the latter case, the top portion of said charge-loading pipe **14** is manufactured of an acid-fast material, e.g., steel, etc. The bottom part of the charge-loading pipe **14** may be a detachable water-cooled casting body made, for example, of iron with a cast-in steel coil.

At its top the pipe **14** terminates with an electrically insulated packing **27** secured thereto and ensuring a sealed telescopic connection with the branch pipe of a loading hopper **15**.

The number of screw jacks **26** is dictated by the dimensions of the charge-loading pipe **14** or, to be more precise, by those of the hollow self-baking electrode **3**, but in any case at least two screw jacks **26** must be used. The screw jacks **26** can be operated either by hand or automatically with the aid of a controllable drive mechanism, e.g., by means of an electric motor or a motorized reducer.

As to the number of temperature-sensitive elements **22** and their arrangement, these are determined by the dimensions of the hollow self-baking electrode.

The above-outlined device functions in the following manner.

First, the charge-loading pipe **14** is brought by the screw jacks **26** into an extreme bottom position (see FIG. **1**) so as to provide free access for attaching thereto in a known manner, e.g., by welding, a temporary mushroom stopper or plug **14***a* made of a sheet material, e.g. steel. Next, the charge-loading pipe **14** is hoisted by the screw jacks **26** until the mushroom stopper **14***a* is in contact with the plane of the bottom edge of the current-carrying mould **1** (see FIG. **9**) thereby defining an annular cavity between the charge-loading pipe **14** and the current-carrying mould **1**, said cavity being closed from beneath by said stopper **14***a* and adapted for forming a hollow self-baking electrode **3**.

Next the drive means **4** for shifting the electrode **3** moves the device down so as to provide a 150–200 mm spacing between the mushroom stopper **14***a* (and hence between the end face of the current-carrying mould **1**) and the furnace hearth.

Following that, the first preset batch of charged particles **18** which are of a current-conducting carbonaceous material, e.g., coke, is fed from the loading hopper **15** along the charge-loading pipe **14** under the bottom end face of a future hollow self-baking electrode **3**, thereby closing the space between adjacent electrodes mounted inside the furnace and making a circuit for the subsequent passage of an electric current.

After that, an electrode mass is loaded into the mass-feeding pipes **2** by resorting to a known means, such as, screw feeders or vibration hoses, filling to capacity the entire volume intended therefore (the annular cavity of a future hollow self-baking electrode **3** and the mass-feeding pipes **2**). Next, the presses **6** are put into operation and the electrode mass undergoes precompression and is compacted (pressed). Further, when operating under steady-state conditions, the presses **6** are not only pressing the electrode mass in the electrode coking zone, but also force out the baked electrode **3**. A power supply is turned on in and an electric current starts flowing the tubular busbars **13**, the current-carrying mould **1**, the mushroom stopper **14***a* and the coke in the thus made circuit. As a result, the mishroom stopper **14***a*, the coke and the electrode mass are heated, which leads to the gradual creation of the temperature conditions required for forming a hollow self-baking electrode **3**.

Upon attaining an electrode coking temperature (350° - 400° C.), the electrode mass, beginning from the electrode end face and extending upwards across its section, undergoes transformation into a new aggregate state forming a solid electrically conductive structure. By that moment, the mushroom stopper **14***a* burns to ashes having performed its function, and the screw jacks **26** move the charge-loading pipe **14**, according to the readings of the temperature-sensitive elements **22** carried therewith, into a certain position inside the current-carrying mould **1**, thus assuring the manufacture of a high-quality hollow self-baking electrode **3**.

With a steady-state production process the electrode mass as well as the charge of a preset composition are fed continuously.

The gas liberated in the furnace hearth rises along the charge-loading pipe **14** giving up its heat to the charged particles **18** and being discharged through a gas offtake **16**.

In this embodiment gas supply in an opposite direction (downwards) through the charge-loading pipe **14** and charged particles **18** is also possible, which allows utilization of either collected waste furnace gases (e.g., drawn off through the gas offtake in a furnace roof) or some other gas.

With the production process as a whole and the coking operation proceeding under normal conditions and with the hollow self-baking electrode **3** being shifted to compensate for its burning-off, the charge-loading pipe **14** (for a given electrode mass brand featuring certain physicomechanical properties) maintains a constant optimum position within the current-carrying mould **1**.

In case of a variations in the course of technological process and disturbances of normal electrode-forming conditions, two versions can be employed for shifting the charge-loading pipe **14**. The selection of a version depends on the electrode size, the quality of the electrode mass, the type of furnace and the nature of the technological process.

According to the first version, the temperature in the coking zone of a hollow self-baking electrode **3** (ranging within 350° - 400° C.) is measured by temperature-sensitive elements **22** whose readings are transmitted to an indicating or recording instrument, e.g., a potentiometer (not shown in FIG. **2**). which is accompanied, for example, by a light or audio signal being sent to an operator actuating manually the screw jacks **26** to move the charge-loading pipe **14**.

According to the second version, the readings of said temperature-sensitive elements **22** are transmitted to a pre-adjusted instrument (e.g., of the potentiometer type) or an integrated-circuit programming unit (not shown on FIG. **2**) which transmits a command signal to the drives of said screw jacks **26** for automatic hoisting or lowering of the charge-loading pipe **14** to set it to the requisite position.

When, for example, a programming unit based on an integrated circuit is employed, it adds the readings of all the temperature-sensitive elements **26** with the command signal for cutting-in the drive mechanisms of said screw jacks **26** being produced only when the upper or lower limit of the temperature in the electrode coking zone deviates from its prescribed critical value. The latter works only for large-sized electrodes (e.g., at least 200 mm). A third version, which is a combination of the first two, is also possible.

Thus, the proposed device ensures reliable operation of the charge-loading pipe adapted for defining a central opening in a hollow self-baking electrode, creates the prerequisites for producing a quality electrode, cuts down electrode mass requirements by precluding flowing out and electrode breakage, contributes to a saving in electric power, and provides higher furnace efficiency.

Another embodiment of the device is shown in FIG. **3** is adapted for forming a solid self-baking electrode and comprises a permanent current-carrying mould **1** for manufacturing said solid self-baking electrode **3**, mass-feeding pipes **2** having bottom portions communicating with the current-carrying mould **1** and top portions interconnected with the drive means **4** for shifting the electrode **3**. The mass-feeding pipes **2** have presses **6** fixed thereon.

A charge-loading pipe **14** is inserted into the current-carrying mould **1** with an insulating packing **20** mounted thereon.

Fastened to the pipe **14** around its circumference are temperature-sensitive elements **22** set up on brackets **21** and inserted with insulating packings **23** inside the current-carrying mould **1** at several points along the height and in the cross-section of the formed solid self-baking electrode **3** in its coking zone.

The top part of the pipe **14** passes through an insulating guide sleeve **24** built in the drive means **4** for shifting an electrode **3** and is interconnected therewith by means of brackets **25** and screw jacks **26**.

In this case the pipe **14** is made of a low carbon alloy steel. As, while lowering the electrode, said pipe **14** acts as a pusher of both the electrode unit and its supporting fixtures, the bottom end of said pipe **14** can be made of high-temperature steel to enhance its reliability, since it is immersed into the electrode slightly below its coking zone in a 450° - 500° C. temperature range.

For providing reliable operation and safe servicing of the proposed device, the brackets **21** on which the temperature-sensitive elements **22** are fixed as well as the brackets **25** acting as an interlocking element between the screw jacks **26** are insulated from the pipe **14** with heat-resisting insulation.

The above-outlined device operates in a manner similar to that of the device shown in FIG. **2**.

The only difference consists in that the pipe **14** is employed for filling the central part of the solid self-baking electrode **3** with either an electrode mass, similar to that forced by presses **6** into the mass-feeding pipes **2**, or use is made of fluxing or alloy additives introduced into said pipe **14** and baked in the electrode mass encompassing said substances, which constituent the central part of a solid self-baking electrode and which, as the electrode is being burnt, take part in melting the charge and obtaining the product of a requisite composition and quality.

Hence, the present invention allows realization of additional technological potentialities and highly important advantages.

According to the embodiment shown in FIG. **4**, the device comprises a permanent current-carrying mould **1** secured to mass-feeding pipes **2** adapted for forming a hollow self-baking electrode **3**. At their top the mass-feeding pipes **2** are fastened to a drive means **4** for shifting the electrode **3**. Presses **6**, each of which having a connecting rod **7** and a piston **8**, are secured to the top part of said mass-feeding pipes **2**.

The current-distribution ring **11** of a current lead **12** coupled through water-cooled tubular busbars **13** with the current-carrying mould **1** is also fastened to said pipes **2**.

A charge-loading pipe **14** has a bottom portion communicating with the current-carrying mould **1** and a top portion secured to the drive means **4** for shifting the electrode **3**. The pipe **14** is also in communication with a hopper **15** and is fitted with a gas offtake **16**.

The above device embodiment is equipped with a programming or control system comprising a follow-up unit **28** and an actuating unit **29**. The input of the follow-up unit **28** is coupled with temperature-sensitive elements **22** which are set up and fixed with heat-resisting insulating packings **23** on the current-carrying mould **1** and its output is coupled through the actuating unit **29** with the presses **6**.

For switching the reciprocating rods **7** and pistons **8** of the presses **6**, limit switches **30** are mounted in the extreme top and bottom positions of said rods **7** and pistons **8**.

It should be added that since the presses **6** can be made as cylinders using either compressed air or a pressurized liquid or as screw presses with electromechanical drives, the actuating units **29** may constitute accordingly, e.g., a solenoid-operated valve or a slide valve or an appropriate electrical apparatus, such as a contactor.

As for the temperature-sensitive elements **22**, they are installed at several points along the circumference and in the cross-section of the hollow self-baking electrode **3** and may constitute, e.g., thermocouples or resistance thermometers.

The follow-up unit **28** can be built, for example, of thyristors, or it can be a standard instrument, e.g., a potentiometer. (see P. N. Manailov, "Heat Engineering Measurements and Automotion of Heat Engineering Processes", Moscow. "Energy" Publishers, 1976, pp. 32 — 32).

The herein-proposed device functions in the following manner.

A charged particle **18** passes from a hopper **15** along the charge-loading pipe **14** into a furnace hearth **19** (bath) directly under electric arcs that are arcing on the end face of said hollow self-baking electrode **3**. A hot gas rises from the furnace hearth **19** through the charge-loading pipe **14** and transmits a considerable part of its heat to the charged particle **18**, whereupon it is discharged through a gas offtake **16**.

Gas flow in an opposite direction (downwards) is also possible, the gas passing in that case through the charge-loading pipe **14** and charged particle **18** which allows utilization of a collected waste furnace gas (e.g., drawn from the gas offtake in a furnace roof) or some other gas, for instance, a natural or inert ones.

The electrode mass, in a solid or liquid state, is fed from a hopper (not shown in FIG. **4**) through branch pipes of each press **6**, as shown by an arrow in the drawing, by resorting to a known means (such as pipelines, vibration hoses, screw conveyors) first into the mass-feeding pipes **2** and then therealong into the permanent current-carrying mould **1** where a hollow electrode **3** is formed and baked under the effect of an electric current flowing therein through a current conductor **12**, current-distribution ring **11** and tubular busbars **13**, and by the heat of the furnace hearth (bath).

The temperature-sensitive elements **22** are continuously measuring the temperatures at several points of said hollow self-baking electrode **3** (including its coking zone) and delivering signals to the follow-up unit **28** which operates the presses **6** with the aid of the actuating unit **29**. Depending on the command signal of the follow-up unit **28**, the signal being in direct relation to the temperature values and to the readings of the temperature-sensitive elements **22** installed in certain locations (points or sections) of a hollow self-baking electrode **3**, the presses **6**, acting simultaneously or individually (selectively) after certain periods of time (prescribed by the program), compress the electrode mass with the aid of the rods **7** and pistons **8** thus forcing it gradually out of the pipes **2** into the current-carrying mould **1**. The baked hollow electrode **3** is squeezed under the pressure of said electrode mass out of said current-carrying mould **1**. As soon as the rods **7** of the presses **6** are pressed into their limit extreme positions, the limit switches **30** associated with the programming control system send a signal for rapid lifting of the pistons **8** to be followed by their lowering with a preset speed.

The rate of the entire process of baking an electrode and its squeezing out of the current-carrying mould to compensate for its burning-off, as well as the burning-off of said electrode, can be adjusted by means of the follow-up unit **28**, the actuating unit **29** and by subsequent operation of the presses **6** within program-prescribed limits thus ensuring automatically a continuous and simultaneous accomplishment of all the above operations, and, thereby providing the prerequisite for obtaining a hollow self-baking electrode **3** of adequate quality.

Another embodiment of the device, presented in FIG. **5**, comprises a current-distribution ring **11** fixed with electrical insulation **10** on mass-feeding pipes **2** secured to a connecting ring **31**.

The connecting ring **31** accommodates an insulating guide sleeve **32** acting simultaneously as a packing and aligned in position by index pins **33** arranged along its circumference and fixed on said ring **31**. A charge-loading pipe **14** passes through said guide sleeve **32**. Fixed over the circumference of the ring **31** by means of a rapidly-detachable lock joint **34** (FIG. **6**), such as, key or screw joints or a combination of said joints (e.g., dowels and keys, dowels and nuts, studs, screws etc.) are water-cooled electric contact plates **35** (FIG. **5**) closed on themselves, with all the adjacent plates being interconnected by a lock joint and the bottom parts of said plates **35** being additionally secured to each other by detachable joints, e.g., by screws **36** turned in their bodies. The electric contact plates **35** are made of copper and alloys thereof and are either castings with special ducts for the passage of cooling water or stampings with drilled ducts.

The connecting ring **31** accommodates insulating packings **37** that are mounted at several points along its circumference and through which feelers **38** are introduced into the coking zone of a hollow self-baking electrode **3**.

To enable their interlocking with the conjugated furnace elements, the top parts of the mass-feeding pipes **2** and charge-loading pipe **14** are fitted with flanges **39** and **40** accordingly. This assures reliable operation of the proposed device and eliminates electrical-shock fatalities in servicing furnace structural elements mating therewith.

A distinctive feature of the proposed device consists in that its design permits readjustment, modernization, of operations and adequate quality of electrodes **3** by changing their cross-section and by affecting the coking process and electrode transfer for offsetting its burning, — all these measures being a function of the technological process and electrical parameters of the furnace.

The charge-loading pipe **14** and the hole for its passage through the joint ring **31** are readily changeable, in other words, they may have varying (greater or smaller) diameters depending on the peculiarities of the technological process and its electrical characteristics, the other elements of the proposed device being in that case unchanged.

To make things clear, it should be pointed out that a need for readjustment or modernization of the proposed device can arise only if a new production process and electrical parameters of the furnace differ considerably from the preceding ones. In all other cases the device does not require any modifications, insofar as the quality of electrodes can be assured by simpler means envisaged by the inherent design of the device which will be clear from a description that follows.

To increase the effect of a charge-loading pipe **14** on the coking of a hollow electrode **3**, it is not made of heat-resistant steel — its usual material, but, instead, its bottom part is provided with a cooling system and is made, for instance, of commercial or heat-resistant iron with a cast-in steel coil along which water, compressed air or a combination (a water-air mixture) is fed, the flowrate of said coolant being adjusted by a conventional valve.

These details, that are evident from the above description, are not shown in FIG. **5**.

The quality of a hollow self-baking electrode **3** is monitored by the feelers **38** at regular intervals to adjust in a proper manner the degree of slipping of the electrode to compensate for its burning-off in order to preclude the squeezing of an unbaked electrode out of the mould, flowing out of the electrode mass or electrode breakage.

The herein-proposed device operates in the following manner.

Initially the annular gap between the electric contact plates **35** and the charge-loading pipe **14** is closed by a temporary sheet steel mushroom stopper (similar to that shown in FIGS. **8** and **9**, but not shown in FIG. **5**) which is welded to the bottom edge of the charge-loading pipe **14** to fit tightly from beneath to the end face planes of said electric contact plates **35**.

The electrode mass fed under pressure along the mass feeding pipes **2** fills up the entire section of the formed self-baking electrode **3**.

Next, the first batch of charged particle **18** of electrically conductive material, such as, coke, is delivered through the charge-loading pipe **14**. The coke fills up the bottom part of said charge-loading pipe **14**, closing a circuit for subsequent passage of an electric current which will flow either between the hollow electrode being formed and furnace hearth or between electrodes adjacent to that being formed. Following that, water and power supplys are turned on. Cooling water flows along the tubular busbars **13** of the current-distribution ring **11** into the electric contact plates **35**, and the electric current starts flowing from the said ring **11** through the tubular busbar **13**, the electric contact plates **35**, the mushroom stopper and the coke in the thus defined circuit.

The coke, the mushroom stopper and the electrode mass are heated as a result, which gradually creates the temperature conditions required for forming a self-baking hollow electrode **3**. As soon as a electrode coking point of at least 360° to 400° C. is attained, the electrode mass, beginning from the electrode end face and extending upwards over its cross-section, undergoes a transformation of its aggregate state, forming a solid electrically conductive structure. From that moment on, the forming of said electrode structure is monitored at regular intervals by means of the feelers **38** inserted at several points in the cross-section of the hollow electrode **3**.

The mushroom stopper burns gradually and completely having performed its functions.

With a steady-state production process, the electrode mass is continuously fed, coked and forces out a baked hollow electrode **3** offsetting its burning-off in the furnace hearth. The charge particles **18** of a prescribed composition are also supplied in a continuous mode.

The gas released in the furnace hearth rises along the charge-loading pipe **14** transmitting its heat to the charged particles **18**, and is exhausted thereafter. In this case a downward gas flow is also possible, the gas passing through the charge-loading pipe **14** and the charged particles **18**; this enables the use of either a furnace exit gas collected therefrom (e.g., drawn off through the gas offtake in the furnace roof) or of some other gas.

Industrial effectiveness of the proposed device is determined by the need for electric furnaces with devices for forming self-baking hollow electrodes without casings, which are required primarily for producing aluminium-silicon, silicon, metal manganese, calcium carbide, etc., where the iron of the electrode casing of a conventional self-baking electrode is a harmful admixture.

According to the embodiment shown in FIG. **7** the device for forming a solid self-baking electrode is similar to that presented in FIG. **5** and comprises a current-distribution ring **11** fixed with electric insulation **10** on mass-feeding pipes **2** secured to a connecting ring **31**.

The connecting ring **31** accommodates an insulating guide sleeve **32** acting as a packing and being aligned in position by index pins **33** set up along its circumference and fixed on said ring **31**.

A charge-loading pipe **14** passes through the guide sleeve **32**.

Fastened by means of a lock joint along the periphery of said ring **31** are electric contact plates **35**, each of which is interlocked with the adjacent one by the lock joint, the bottom part of said plates being additionally interconnected by means of detachable joints, such as screws **36** turned in their bodies.

The electric contact plates **35** are made of copper or alloys thereof and are either castings with conduits for cooling water or stampings with drilled conduits.

The connecting ring **31** incorporates insulating packings **37** set up at several points along its circumference with feelers **38** passing through said packings **37** into the coking zone of said solid self-baking electrode **3**.

The above-outlined device functions in a manner similar to that of the device shown in FIG. **5**, the only difference being in that the charge-loading pipe **14** is either employed for charging into the central part of the solid self-baking electrode **3** an electrode mass similar to that supplied along mass-feeding pipes **2** or for loading fluxing and alloy additives, which on being baked in the surrounding electrode mass form the central part — a core — of said solid self-baking electrode structure and are consumed together with the electrode during its burning-off, being melted together with the charged particles and contributing to the manufacture of a final product of the requisite composition and quality.

This assures additional vital technological potentialities and advantages.

What we claim is:

1. A method of forming a self-baking electrode, comprising the steps of: feeding an electrode mass into a mass-feeding passage during melting in an electric furnace; charging said electrode mass; forcing said electrode mass out of said mass-feeding passage and supplying it into a permanent current-carrying mold, in accordance with data obtained by continuous measuring of temperature of the electrode being formed at several points along its height and in its cross-section, at a rate which is proportional to that of coking, shifting and burning-off of said electrode; coking said electrode mass and transforming it into a solid structure; and squeezing the electrode out of said mold as it is being coked and burnt.

2. A method of claim **1**, further comprising the step of feeding said electrode mass into the coking zone by alternating its operation mode to prevent irregular roasting of the electrode.

3. A method of claim 1, further comprising the step of introducing fluxing alloy additives into the electrode mass while forming the self-baking electrode.

4. A device for forming a self-baking electrode, comprising; a permanent current-carrying mold for forming and baking said electrode;

a mass-feeding passage, for feeding electrode mass, communicating with said permanent current-carrying mold;

a drive means, for shifting the electrode being formed, coupled to a side surface of a top part of said mass feeding passages with electrical insulation;

presses coupled with electrical insulation to a top surface of the top part of said mass-feeding passages;

a current distribution ring coupled with heat and electrical insulation to said mass-feeding passages;

a current lead from a power supply coupled to said current distribution ring;

water-cooled tubular busbars through which said current distribution ring is coupled with said permanent current-carrying mold;

a charge-loading means having a top part secured to said drive means and a bottom part communicating with said permanent current-carrying mold and around which said mass-feeding pipes are arranged, said part of said charge-loading means being fitted with a gas offtake; and

thermoelements for measuring the temperature of said electrode being formed.

5. A device of claim 4 for forming a self-baking electrode, wherein;

temperature-sensitive elements are employed as said thermo-elements, embedded in the electrode mass and mounted on said charge-loading means; and

said charge-loading means is provided with a drive means associated with said temperature-sensitive elements.

6. A device of claim 5, further comprising a programming control unit, which consists of:

a follow-up unit having an input coupled to said temperature-sensitive elements; and

at least one actuating unit having an inlet connected to the output of said follow-up unit and an outlet coupled to said presses.

7. A device of claim 4, further comprising:

a connecting ring fastened to said mass-feeding passages;

water-cooled electric contact elements connected by a lock joint to said connecting ring, interconnected to each other by aid of lock joints and being detachable;

an insulating guide sleeve through which said charge-loading passage is introduced into said permanent current-carrying mold, said guide sleeve simultaneously acting as a packing; and

feelers employed as said thermoelements, introduced periodically into the electrode coking zone inside said current-carrying mold with insulating packings, and set up in said connecting ring at several points along the circumference and in the cross-section of said electrode being formed.

8. A device of claim 4, wherein said charge-loading passage is cooled, a bottom part of said passage being fitted with internal conduits for the passage of a cooling mixture and with a means for adjusting the flowrate of said cooling mixture.

* * * * *

United States Patent [19]

Suga

[11] **4,243,833**

[45] **Jan. 6, 1981**

[54] **CARBON ELECTRODE FOR ARC LAMP**

[76] Inventor: **Nagaichi Suga,** 2 Toyama-cho, Shinjuku-ku, Tokyo, Japan

[21] Appl. No.: **55,197**

[22] Filed: **Jul. 2, 1979**

[30] **Foreign Application Priority Data**

Apr. 13, 1979 [JP] Japan 54-044187

[51] **Int. Cl.**^{3} **H05B 31/08;** H05B 7/07

[52] **U.S. Cl.** .... **13/18 C;** 314/60

[58] **Field of Search** .... 13/18 C, 18 R; 314/60; 313/357

[56] **References Cited**

U.S. PATENT DOCUMENTS

3,072,558	1/1963	Myers et al.	13/18 C X
3,084,419	4/1963	Doetsch et al.	13/18 C X
3,187,089	6/1965	Cosby et al.	13/18 C X
3,921,023	11/1975	Valchev et al.	13/18 C X
4,002,942	1/1977	Gaboury	13/18 C X

Primary Examiner—Roy N. Envall, Jr.
Attorney, Agent, or Firm—Wenderoth, Lind and Ponack

[57] **ABSTRACT**

A carbon electrode for an arc lamp comprising a plurality of carbon rods joined together in desired length by use of an adhesive comprising metal or carbon powder or mixture thereof and method for preparation of said electrode.

8 Claims, 8 Drawing Figures

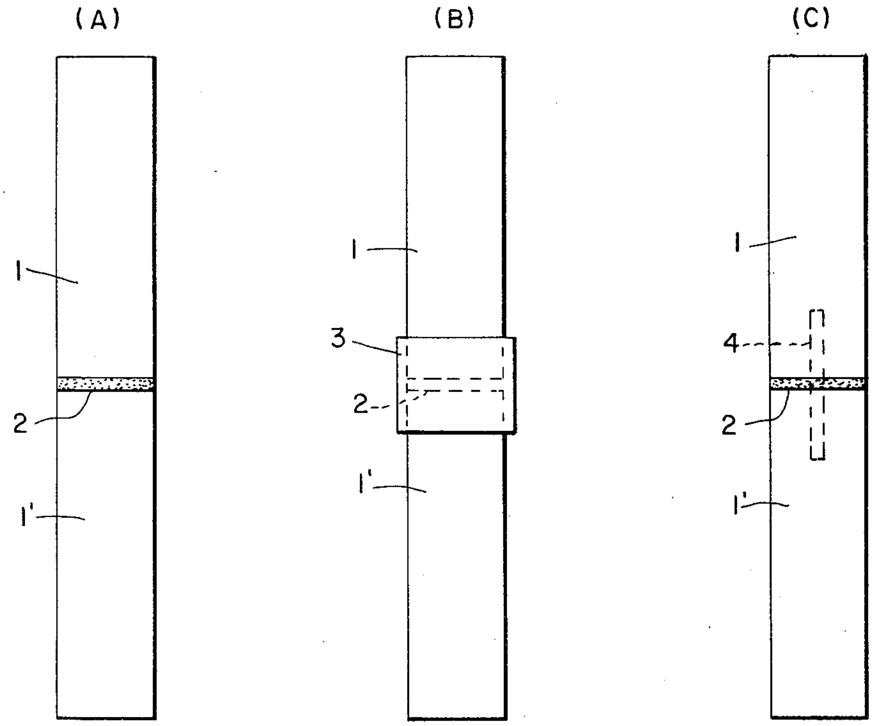

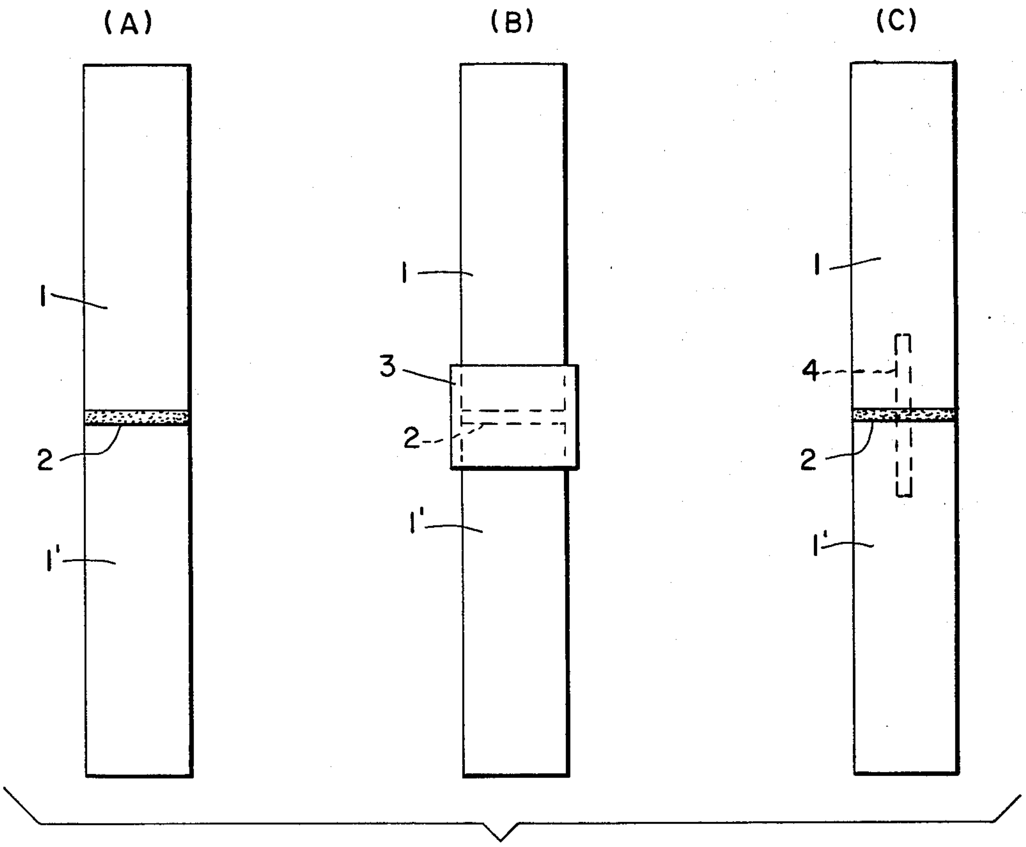
(A)
(B)
(C)
1
2
1'
1
3
2
1'
1
4
2
1'

FIG. 1

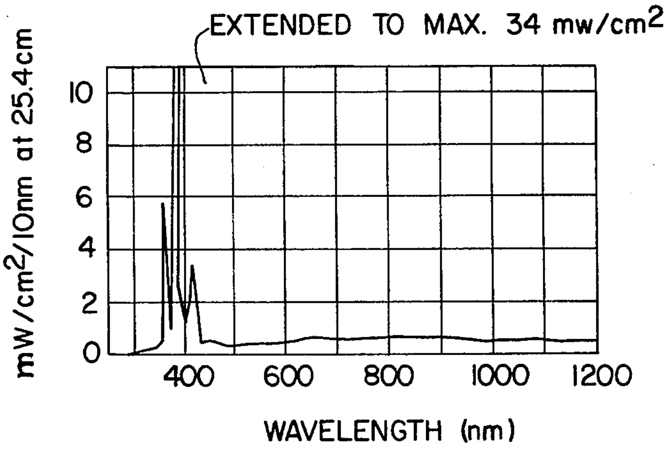
EXTENDED TO MAX. 34 mw/cm2
mW/cm2/10nm at 25.4cm
10
8
6
4
2
0
400
600
800
1000
1200
WAVELENGTH (nm)

FIG. 6

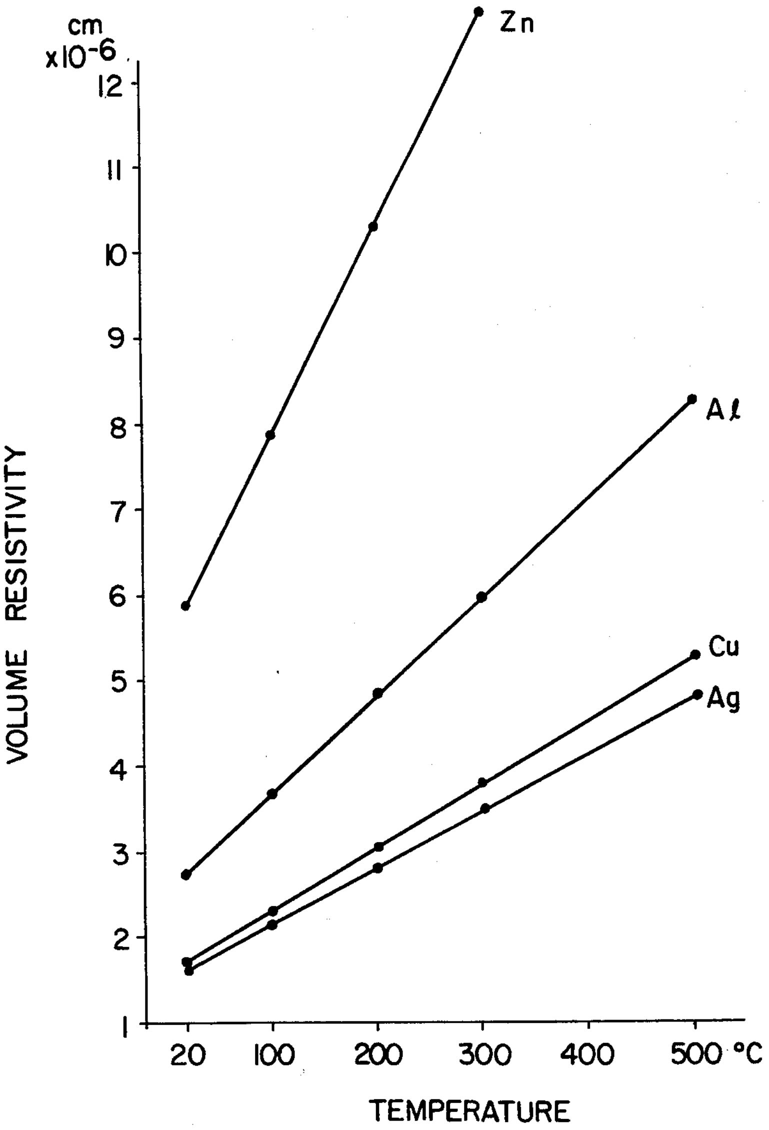
cm
x10-6
12
11
10
9
8
7
6
5
4
3
2
1
VOLUME RESISTIVITY
Zn
Aℓ
Cu
Ag
20
100
200
300
400
500 °C
TEMPERATURE

FIG. 2

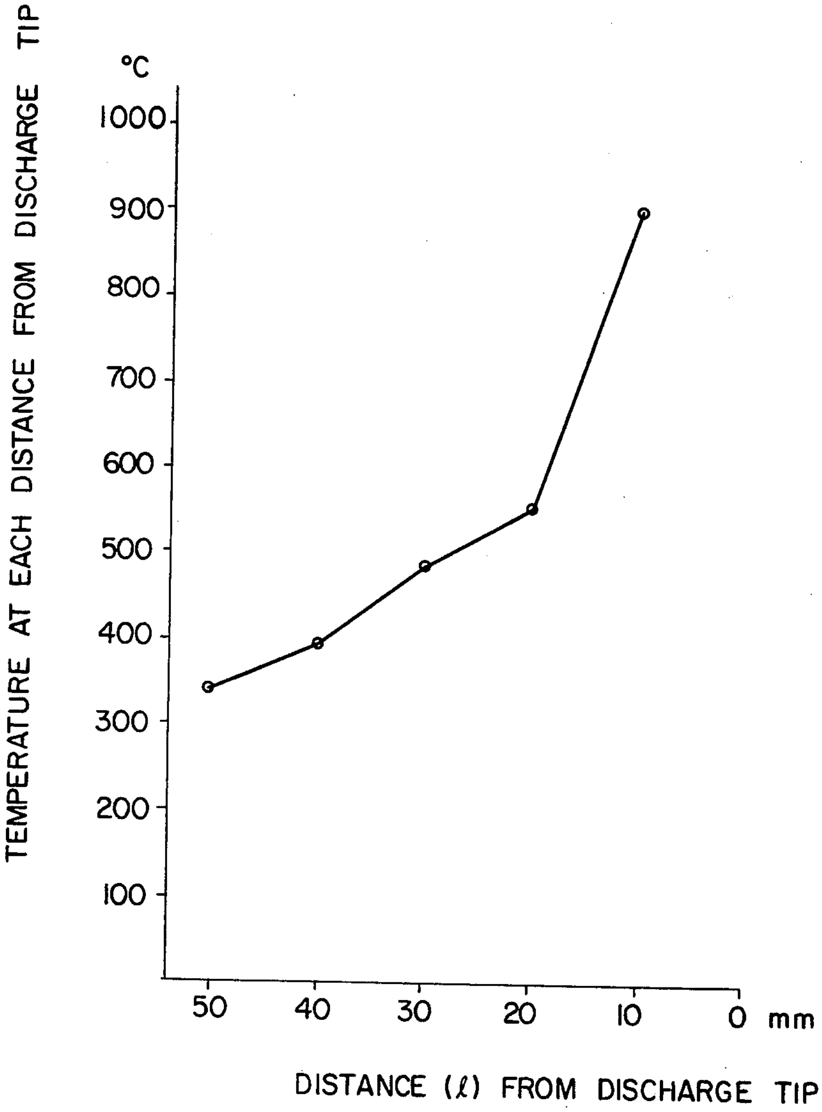
TEMPERATURE AT EACH DISTANCE FROM DISCHARGE TIP
°C
1000
900
800
700
600
500
400
300
200
100
50
40
30
20
10
0 mm
DISTANCE (ℓ) FROM DISCHARGE TIP

FIG. 3

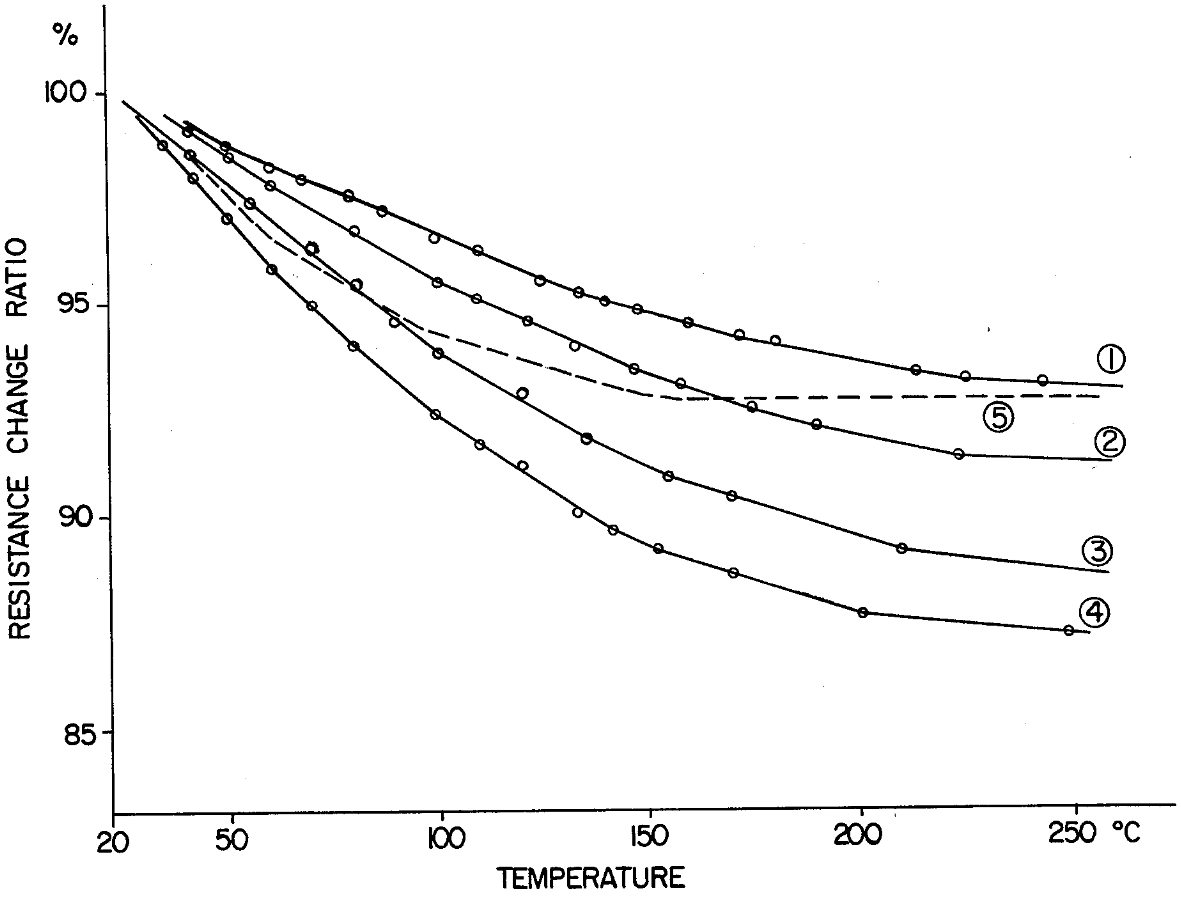
%
100
95
90
85
RESISTANCE CHANGE RATIO
20
50
100
150
200
250 °C
TEMPERATURE
①
②
③
④
⑤

FIG. 4

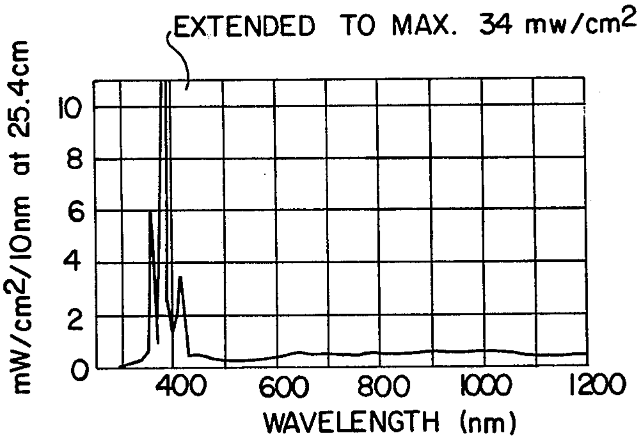
EXTENDED TO MAX. 34 mw/cm2
mW/cm2/10nm at 25.4cm
10
8
6
4
2
0
400
600
800
1000
1200
WAVELENGTH (nm)

FIG. 5

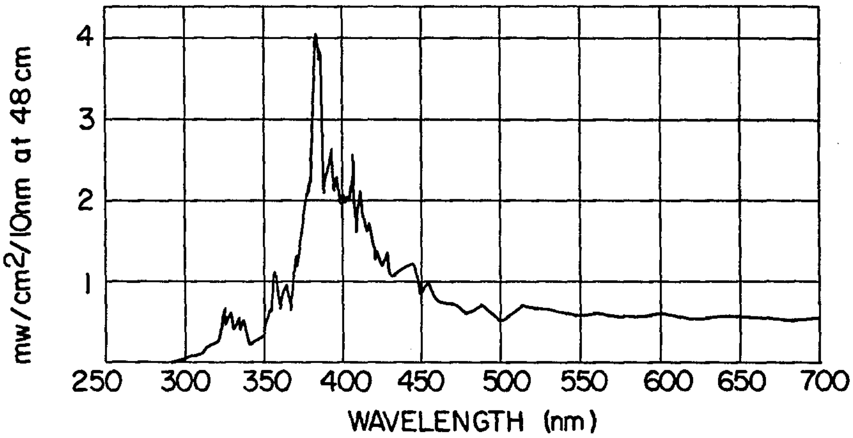
mw/cm2/10nm at 48 cm
4
3
2
1
250
300
350
400
450
500
550
600
650
700
WAVELENGTH (nm)

FIG. 7

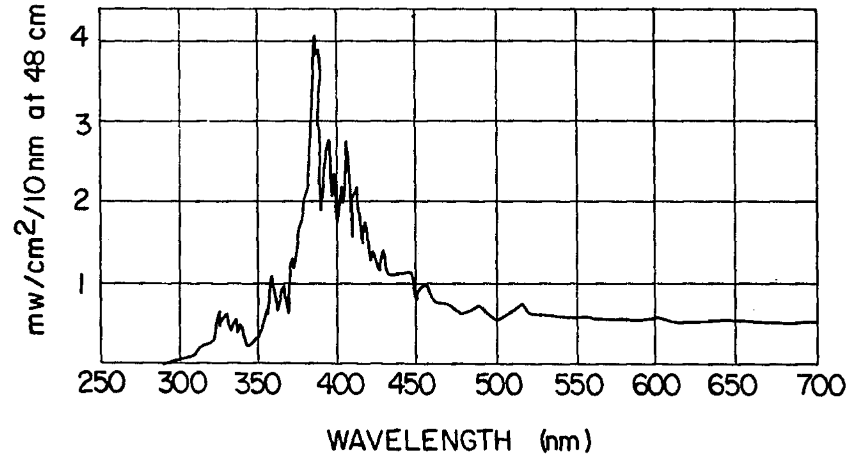
mw/cm2/10nm at 48 cm
4
3
2
1
250
300
350
400
450
500
550
600
650
700
WAVELENGTH (nm)

FIG. 8

CARBON ELECTRODE FOR ARC LAMP

BACKGROUND OF THE INVENTION

This invention relates to an electrode for an arc lamp suitable, for example, as a carbon electrode for weather- and light-resistance testing.

The conventional electrode for arc lamps for weather-and light-resistance testing (hereinafter simply referred to as the "weathering test") is expensive and is rapidly consumed. When consumed below a predetermined length, the electrode must be discarded and replaced by a fresh one. In discarding the used electrode, it must be subjected to high temperatures in a combustion treatment which markedly damages the furnace in which such treatment is performed. Hence, it is by no means easy to dispose of the used electrode.

In the case of an ordinary ultraviolet weatherometer, for example, two lower electrodes each having a length of 100 mm are positioned to oppose an upper electrode having a length of 305 mm and are caused to alternately discharge and generate the arc. In the single discharge for 24 hours, the length of the upper electrode is reduced from 305 mm to about 190 mm while that of the lower electrodes is reduced from 100 mm each to 76 mm. At this time all the electrodes must of replaced by fresh electrodes, respectively. In this instance, the used upper electrode having the reduced length of 190 mm may be cut to 100 mm and used as one of the lower electrodes but the rest must be supplied afresh. This is of course very disadvantageous economically. Moreover, the used electrodes having the length of not greater than 100 mm can neither be further used nor burnt at a temperature below 2,000° C. Hence, their disposal has, to date, been another serious problem.

Despite these problems, it has never been conventionally contemplated to use the used electrodes again by joining them together. This is quite understandable in view of the fact that when the electrodes are simply joined together, the spectral composition would naturally become unstable because the voltage used is so high that the discharge occurs at the joint portion.

OBJECTS AND BRIEF SUMMARY OF THE INVENTION

In view of the foregoing, it is an object of this invention to provide, in an economical manner, an electrode having a stable spectral composition, low consumption ratio and prolonged service life, by effectively utilizing a used electrode or an electrode of such short length that it would conventionally have been discarded.

As a result of intensive studies, the present inventor has surprisingly found that when a plurality of short electrodes are joined together, using a specific adhesive and applied with an auxiliary structure of a suitable length, there is obtained an electrode which not only has a stable spectral composition but also a smaller consumption ratio at discharge, thereby prolonging its service life.

The present invention is based on the foregoing finding.

BRIEF DESCRIPTION OF THE DRAWINGS

FIG. 1 is a front view of an embodiment of the present invention;

FIG. 2 is a diagram depicting the relationship between the temperature rise of the metal and the volume resistivity;

FIG. 3 is a diagram depicting the relationship between the consumption of the U.V. carbon and the temperature change in the joint portion;

FIG. 4 is a diagram depicting the relationship between the temperature and the resistance change ratio of the electrode of the present invention versus the conventional carbon electrode;

FIGS. 5 and 7 are diagrams each depicting the spectral composition of the conventional electrode; and

FIGS. 6 and 8 are diagrams each showing the spectral composition of the electrode of the present invention.

DETAILED DESCRIPTION OF THE INVENTION

The adhesive to be used in the present invention is obtained by kneading metal particles, carbon powder or the like with a resin and a solvent for the resin.

When metal particles are used, the preferred examples include aluminum, silver, copper, zinc etc. Although not restricted particularly, these metals are used in the powder form having a particle size of 200 to 300 mesh.

The resin to be used is one which is bondable to carbon or a binder of such kind. Preferred examples of the resin are an acrylic resin, an epoxy resin, a polystyrene resin, polyvinyl acetate, polyvinyl alcohol etc. However, it is not preferred to use those compounds which generate chlorine gas or other noxious gases at the time of burning.

As a solvent for the resin, it is possible to use ordinary solvents such as methyl ethyl ketone, ethyl acetate or other solvents which serve as a thinner for the resin.

The resin and the solvent are used as the binder also when only the carbon powder is used without any metal.

The metal-containing adhesive to be used in the present invention is listed above and the carbon powder is added in this case to function as a resistance-adjuster at the time of the temperature rise. In other words, as illustrated in FIG. 2, the metal powders such as silver, copper, aluminum, etc. increase in resistance with the temperature rise whereas pure carbon decreases in resistance with an increasing temperature as can be clearly seen from (4) of FIG. 4. It is thus possible to properly adjust the increment of resistance of the metal by the addition of the carbon powder. Because of the presence of such a joint portion, the electrode of the invention has less of a decrease in resistance with the temperature rise and less consumption, as a whole, in comparison with an electrode consisting solely of the pure carbon without any joint portion.

The object of the invention can also be accomplished when the carbon powder contains the adhesive, by adjusting its quantity and mesh size.

The joint portion in the present invention can be formed in the following manner. Namely, the edge faces of the carbon electrode rods **1**, **1'** are joined together using the adhesive layer **2** as shown in FIG. **1**(A). Further, a metal ring **3** may be fitted around the joint portion as shown in FIG. **1**(B). Alternatively, a thin hole is bored at the center of the joint face of each electrode **1**, **1'** and a metal core **4** such as a rod, a screw having both ends tapped or a stud is fitted into the thin holes for joining the electrodes together as shown in FIG. **1**(C).

The number of electrodes to be joined may be greater than 2 and their lengths may vary from each other. In any case, the electrodes should be joined to provide a required length. The present invention may be applied to electrodes whether they have a core or not, and of course to a ultraviolet carbon electrode and to a sunshine carbon electrode.

FIG. **3** is a diagram showing the temperature change at the joint portion when two used U.V. carbon electrodes, of 50 mm size are joined together in accordance with the present invention. When discharge is carried out using this joined electrode, the carbon is gradually consumed as the discharge progresses and the tip of the electrode gradually approaches the joint portion while the temperature of the joint portion gradually elevates.

The action and effect of the present invention will be explained further with reference to examples thereof.

Two used non-core carbon electrodes, each having a length of 50 mm and a diameter of 13 mm, are joined together using each of the adhesive compositions (1) through (5) of the Table below obtained by dissolving an epoxy resin in a thinner and by a composition consisting of carbon powder, the resin and the solvent. Discharge tests are then performed on the electrodes thus joined.

The resistance of the joined carbon electrodes of the present invention before use and after 24 hours use (resistance over 60 mm of residual length) is illustrated in the Table. The difference in resistance before and after such use for each testpiece is within 12 mω.

TABLE

	Adhesive composition (weight ratio)					Resistance	
	resin %	solvent %	Ag powder %	Al powder %	C powder %	Before use (80 mm of a 100 mm electrode) mΩ	After 24 hours' use (60 mm of residual length) mΩ
(1)	10	30	60	—	—	42.29-44.58	30.22-32.48
(2)	10	29	58.5	—	2.5	42.44-44.79	30.33-32.75
(3)	20	60	—	20	—	50.56-52.86	38.45-40.80
(4)	20	58	—	19.5	2.5	50.78-53.11	38.65-41.00
(5)	9.5	27.5	55	4.5	3.5	47.23-53.33	35.09-41.29
fresh electrode	no joint		(conventional electrode)				
			C powder				
(6)	3.6	65.3	31.1		small coating amount	53.1	41.3

	Residual length after 24 hours' use mm	Consumed length at 24 hours mm	Consumption ratio mm/hr	Spectral distribution
(1)	80	20	0.83	equivalent to prior art
(2)	81	19	0.79	equivalent to prior art
(3)	85	15	0.63	equivalent to prior art
(4)	86	14	0.58	equivalent to prior art
(5)	84	16	0.67	equivalent to prior art
fresh electrode	76	24	1.00	—
(6)	82	18	0.75	equivalent to prior art

In this instance, the metal admixed in the adhesive also causes the temperature to rise with consumption of the electrode and its resistance also increases. This behavior is illustrated in FIG. **2**. As the length of the electrode decreases, resistance of the carbon electrode decreases. On the other hand, the discharge section approaches the joint portion to elevate the temperature at that portion. Hence, resistance at the joint portion increases, thereby restricting the resistance drop of the electrode as a whole. This also provides the effect of restricting the change in resistance occurring in the carbon electrode discharge circuit of the conventional electrode, and constantly ensures stable discharge. Consequently, the electrode of the invention is free from change in the discharge current resulting from the change in resistance with the passage of time of use of the electrode in contrast to conventional electrodes, and hence, the present electrode is free from change in spectral composition. It is therefore possible, by the use of the electrode of the present invention, to accurately carry out the weathering test without adverse influence on the actions of fading and degradation of the testpiece.

During the discharge, the temperature at the joint portion increases with consumption of the carbon as shown in FIG. **3**. This makes up for the decrease in the resistance due to the consumption of the carbon and restricts the change in resistance during the time the lamp is lit so that it becomes possible to realize a stable discharge. The relationship between the temperature and resistance of the metal contained in the adhesive is shown in FIG. **2**. It can be seen that the resistance of the resin of the adhesive cooperates or compensates for the decrease in the resistance due to consumption of the carbon. Accordingly, the consumption can be restricted and the service life can be prolonged in comparison with the conventional electrode consisting of a single electrode. In addition the spectral composition of each testpiece, as one of the essential factors, is stable and is found to be perfectly equal to the conventional electrode at the initial stage of lighting.

FIG. **5** is a diagram of the spectral composition of the conventional U.V. carbon and FIG. **6** is a diagram of the spectral composition of the electrode of the present invention.

Also with respect to the sunshine carbon electrode, the spectral composition of the present invention is comparable to that of the conventional electrode by comparing FIG. **8** (the present electrode) with FIG. 7 (the conventional electrode).

FIG. **4** depicts the change in resistance with respect to the temperature rise between the electrode of the present invention and the conventional electrode. Electrodes **(1)** through **(3)** are obtained by joining carbon electrodes, each having a diameter of 13 mm, whereby the adhesive for the electrode **(1)** contains a small amount of C powder added to Ag powder (0.243 g), the adhesive for the electrode **(2)** contains a large amount of C powder added to Ag powder (0.421 g) and the electrode **(3)** consists of Ag powder, Al powder and C powder (0.206 g). The electrode **(4)** is a non-joint single electrode, and the electrode **(5)** is obtained by kneading C powder (0.007 g) with the resin and the solvent. The resistance measuring gap is 100 mm for each electrode.

As can be seen clearly from this graph, the conventional electrode **(4)** decreases in resistance with temperature rise whereas the electrodes **(1)**, **(2)** and **(3)** of the present invention exhibit less change in resistance due to the temperature rise. This results from the fact that the resistance of the metal in the adhesive increases with the temperature rise, thereby compensating for the resistance change due to the temperature rise of the carbon.

For example, the resistance change ratio of the carbon alone (conventional electrode) is about 87% when the temperature is elevated from the normal temperature to 250° C. as the reference temperature, and the resistance change ratio is about 93% for the electrode **(1)** of the present invention using the adhesive, whereby the presence of the joint portion makes up for the resistance change of about 6%. It is possible, in accordance with the present invention, to obtain various characteristics of the temperature—resistance change ratio by suitably selecting the kind and amount of the metal to be contained in the adhesive.

When the carbon powder is used in combination with the resin, the change ratio is about 93% between 150° and 250° C. as shown from the curve of the electrode **(5)**. It is possible also in this case to obtain various characteristics of the temperature—resistance change ratio by using carbon having a varying mesh size and changing the amount thereof to be added.

As described in the foregoing paragraph, it is possible, in accordance with the present invention to obtain an excellent electrode having a smaller consumption ratio than the conventional electrode by effectively utilizing the used electrodes or the cut tip of the electrodes. Hence, the present invention provides an ideal solution to the problem of disposal of the waste electrodes and is also extremely advantageous from the standpoint of preservation of resources and prevention of environmental pollution.

What is claimed is:

1. A carbon electrode for an arc lamp employed in weathering tests which comprises a plurality of carbon rods joined together lengthwise by the use of an adhesive, said adhesive comprising a metal powder, a binder resin bondable to carbon and a solvent for said resin,

said adhesive increasing in resistance with increasing temperature so as to compensate for the decrease in resistance with reduction in length of said electrode as it is consumed, whereby a stable spectral distribution is emitted.

2. The carbon electrode according to claim **1** wherein said metal powder is selected from the group consisting of silver and aluminum powder.

3. The carbon electrode according to claim **1** wherein said resin is selected from the group consisting of an acrylic resin, epoxy resin, polystyrene resin, polyvinyl acetate and polyvinyl alcohol.

4. The carbon electrode according to claim 2 wherein the adhesive contains about 10% by weight resin, about 30% by weight solvent and about 60% by weight silver powder.

5. The carbon electrode according to claim **4** wherein the resin is an epoxy resin.

6. The carbon electrode according to claim **2**, wherein the adhesive contains about 20% resin, about 60% solvent and about 20% aluminum powder.

7. The carbon electrode according to claim **6**, wherein the resin is an epoxy resin.

8. The carbon electrode according to claim **1** wherein the joined area of said electrodes is reinforced by a reinforcing member comprising a ring into which the end portions of said electrodes are inserted.

* * * * *

United States Patent [19]
Machner et al.

[11] **4,304,953**
[45] **Dec. 8, 1981**

[54] METHOD OF PRODUCING A CONSUMABLE ELECTRODE OF LARGE DIAMETER

[75] Inventors: **Peter Machner**, Leoben; **Peter Pressler**, Kapfenberg, both of Austria

[73] Assignee: **Vereinigte Edelstahlwerke Aktiengesellschaft (VEW)**, Vienna, Austria

[21] Appl. No.: **41,534**

[22] Filed: **May 22, 1979**

[30] **Foreign Application Priority Data**

May 24, 1978 [DE] Fed. Rep. of Germany 2822657

[51] **Int. Cl.**^{3} **H05B 7/07**; H05B 7/101
[52] **U.S. Cl.** .... **13/18 R**; 13/9 ES
[58] **Field of Search** .... 13/18 R-18 C

[56] **References Cited**

U.S. PATENT DOCUMENTS

4,190,946 3/1980 DeSouza .... 13/18 R X

Primary Examiner—Roy N. Envall, Jr.
Attorney, Agent, or Firm—Brumbaugh, Graves, Donohue & Raymond

[57] ABSTRACT

A method of and apparatus for producing consumable electrodes with large diameters to be used for remelting involves assembling the electrode of individual longitudinal parts adjacently arranged. Which longitudinal parts are continuously cast in special moulds as strands having polygonal cross sections. The parts are assembled so as to form a polygonal overall cross section, and their end faces are welded together with a common gripping head for the electrode holding device.

1 Claim, 9 Drawing Figures

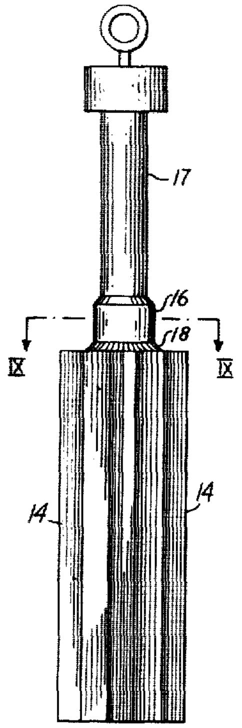

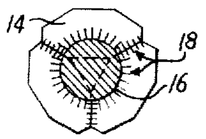

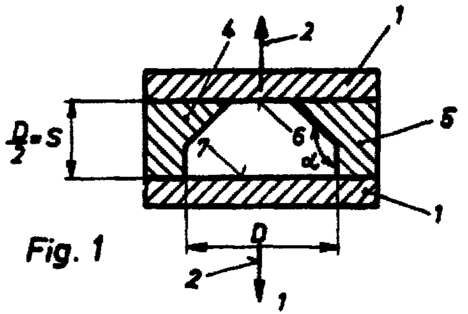

Fig. 1

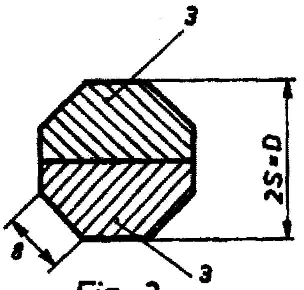

Fig. 2

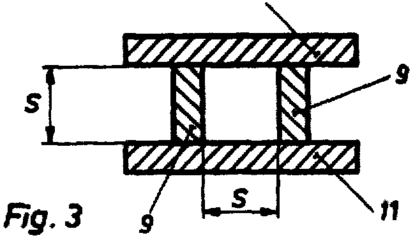

Fig. 3

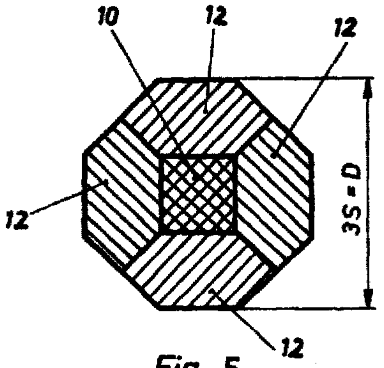

Fig. 5

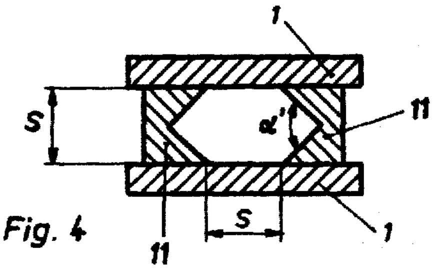

Fig. 4

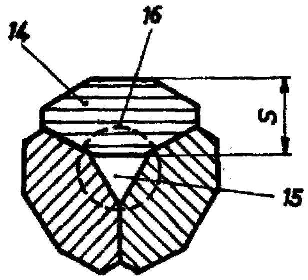

Fig. 7

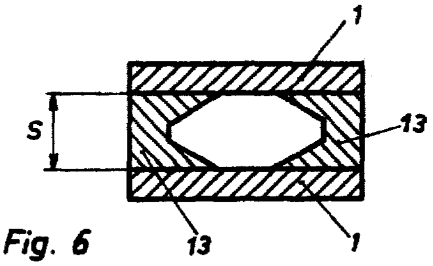

Fig. 6

FIG. 8

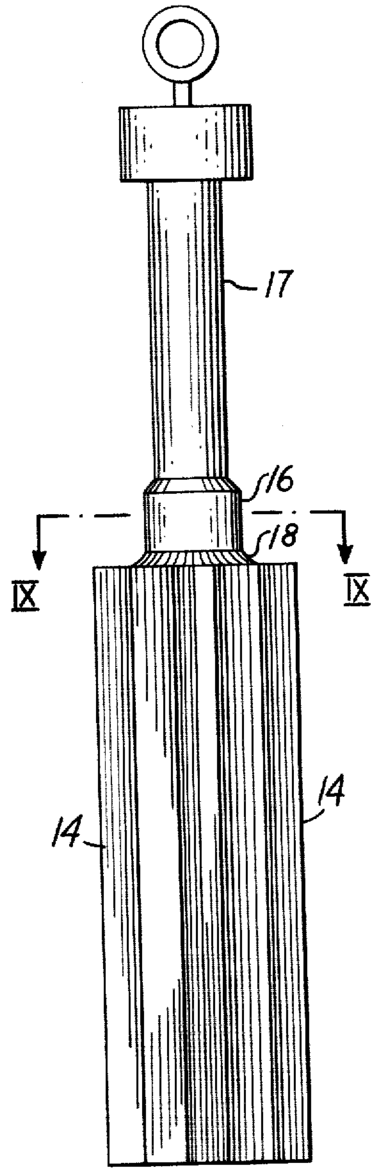

FIG. 9

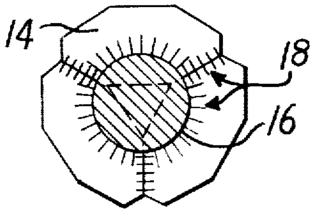

METHOD OF PRODUCING A CONSUMABLE ELECTRODE OF LARGE DIAMETER

BACKGROUND OF THE INVENTION

The invention relates to a method of producing consumable electrodes of large diameters for remelting, in particular electroslag remelting, wherein the electrode is assembled of individual longitudinal parts adjacently arranged.

With the ingot treating and remelting processes used to an increasing extent in the high-grade steel industry, consumable electrodes are in most cases used as insert parts. This involves remelting processes, such as vacuum arc-furnace methods and electroslag remelting processes.

Consumable electrodes for the metallurgical methods mentioned above have hitherto been produced by reshaping a cast ingot into an electrode body by rolling or forging and welding a gripping head for an electrode holding device to the same. Although it is possible in this manner to obtain electrode diameters that, as required, are uniform over the total electrode length, reshaping is time consuming. It is furthermore disadvantageous that, when producing rod-shaped bodies from big cast ingots, the ingot segregation inevitably present in the ingot will be recognizeable even in the electrode to be remelted. In some cases, this segregation may be reflected in the remelted ingot—although to a reduced extent.

A further disadvantage of producing consumable electrodes by casting into common closed-end moulds of steel making plants is that these must have a conical shape in order to be able to draw off the mould after the casting has solidified, and the maximum electrode length will depend on the mould length. The mould length, however, cannot be arbitrarily increased. Moreover, a so-called dead-head has to be provided for casting-technological reasons, which dead head has to be separated from the remaining ingot part, thus constituting a loss of material and additional work.

The tendency in the development of the ingot treating and remelting methods is towards the production of ever increasing ingots, having a round cross section as a rule. It is thus necessary to adapt the electrode to the cross section of the mould used for the ingot treating methods. In order to produce consumable electrodes having larger diameters, it has already been proposed to combine rod-shaped bodies made up of several parts having a cross section that corresponds to part or half of a circular cross section (British Pat. No. 1,001,042). These electrodes which, when seen in cross-section, are multiple-part electrodes, thus have an approximately circular outer contour and for this reason can be produced only with difficulty and great expenditure. Another proposal provides for melting together into one ingot, consumable electrodes that are multiply subdivided in the longitudinal and transverse directions, the individual construction elements having a square cross section which is produced by forging; the outer contour of these electrodes is also square (British Pat. No. 1,002,106). This type of assembled electrode not only is complex and time consuming in its production, it also cannot be used for the production of ingots in circular moulds, which shape is needed because the cross section of the consumable electrode has to be designed such that its surface has a nearly uniform distance from the rim of the mould top part (Austrian Pat. No. 282,845) and from the remelting electrode, respectively.

SUMMARY OF THE INVENTION

It is the object of the present invention to overcome the disadvantages of the known methods for producing consumable electrodes, i.e. to provide an improved method with which it is possible to produce in a simple and cheap way, high-quality consumable electrodes which also have large diameters. The electrodes are to have a nearly constant chemical composition over their lengths, are to be largely free from segregations and are to have uniform cross sections. A further object of the invention is the production of consumable electrodes of any length, which have an outer contour that substantially corresponds to the inner contour of the mould top part and the remelting mould, respectively.

These objects of the invention are achieved by applying continuous casting methods to form longitudinal parts as strands with polygonal cross sections, assembling the parts to form a polygonal overall cross section, and welding their front faces together with a common gripping head for the electrode holding device.

The invention furthermore relates to a continuous casting mould for continuously casting the longitudinal parts of the consumable electrodes. This mould comprises mould narrow side parts that are displaceably arranged between two parallel mould parts forming the broad sides of the mould. The mould is characterized in that each mould side part has at least two supporting faces for the strand that are arranged at an angle to each other.

A consumable electrode produced according to the method of the invention is characterized in that the longitudinal parts, in cross section, have the form of irregular polygons whose width is considerably greater than their height, and are assembled to form an at least approximately regular-polygonal cross section for the electrode.

Advantageously, the consumable electrode, in cross section, has the shape of a regular octagon assembled of two octagon-halves adjacently arranged.

The two narrow-side supporting faces of the continuous casting mould used for the production of such a consumable electrode, enclose an angle of 135°. The width of one supporting face on the broad side of the mould corresponds to the side length of the octagon, and the width of the opposite supporting face corresponds to the diameter of the electrode.

In order to produce particularly thick electrodes, for instance with a diameter of more than 900 mm, it is advantageous to assemble several longitudinal parts in an annular manner so as to form an electrode cross section with an approximately regular-polygonal outer contour and to leave free an inner space that is also polygonal.

According to a preferred embodiment, the inner space is filled by a longitudinal part that has also been continuously cast.

BRIEF DESCRIPTION OF THE DRAWING

The invention will be described in more detail by way of embodiments illustrated in the drawings, wherein:

FIG. 1 is a horizontal section through a continuous casting mould shown in schematic illustration, which mould is used for the production of sexagonal strands that are assembled in pairs to form a two-part electrode whose cross section is illustrated in FIG. 2;

FIGS. 3 and 4 are also horizontal sections through a continuous casting mould, one for the production of a billet, and one for sexagonal cast strands;

FIG. 5 shows a cross section of a consumable electrode assembled of these strands,

FIG. 6 represents the production of octagonal strands which are assembled to form a three-part electrode according to FIG. 7, and

FIG. 8 shows a fully assembled electrode while FIG. 9 shows a cross section thereof along line IX—IX.

DESCRIPTION OF ILLUSTRATIVE EMBODIMENTS

In FIG. 1, there is shown broad side mould parts 1 of a rectangular slab mould for the continuous casting of steel. Parts 1 are displaceable in the direction of arrows 2 so as to produce strands of various thicknesses.

In order to produce an octagonal consumable electrode of two strands 3 by continuous casting, according to FIG. 2, the normally straight mould parts forming the narrow sides are replaced by angular mould side parts 4, 5 having two supporting faces which enclose an angle α of 135°. These mould side parts 4, 5 are arranged relative to each other in a mirror-reflected way. Supporting faces 6, 7 on the two broad-side mould parts 1 are such that the supporting face 6 has a width that corresponds to the side length 8 of the regular octagon, while the width of the opposite supporting face 7 corresponds to the electrode diameter D, wherein $D=2S$, and in practice may be for instance 600 mm. The mould of FIG. 1 is then used in a conventional manner to cast the strands 3 of any convenient length. The longitudinal dimensions of strands 3 are then welded together in the form shown in FIG. 2.

In FIG. 3, a continuous casting mould for slabs has been adjusted for the production of billets 10 having a side length S, through the use of narrow-side, plane mould side parts 9 and broad side parts 1 which are used for slab casting. The mould side parts 9 are then replaced, as is illustrated in FIG. 4, by angular mould side parts 11. Each of these have two supporting faces for the strand that enclose an angle α' of 90°. This results in a sexagonal casting cross section for a strand 12 having a thickness S and a width S for the supporting faces formed by the mould parts 1. Therefore, it is possible to combine one square billet 10 with four sexagonal strands 12 to form an octagonal consumable electrode having a diameter $D=3$ S, for instance of 900 mm, as is illustrated in FIG. 5.

In FIG. 6, the production of octagonal strands 14 by using angular mould side parts 13 with three supporting faces each, is illustrated. The electrode made up of three of the strands 14 has a polygonal cross section with a small central cavity 15 of triangular cross section, which cavity has no negative effects during operation. The broken-line contour 16 shown in FIGS. 7 and 9 defines the position of a gripping head 17 for the electrode holding device of FIG. 8. This gripping head and the individual electrode parts are combined by welds 18, so that an electrically well-conducting and mechanically sufficient connection is created. Naturally, similar fixed gripping heads are provided for the embodiments illustrated in FIGS. 2 and 5.

The method of the invention can be applied in a particularly advantageous manner for the production of electrodes having a diameter of more than 350 mm. With the continuous casting plants for steel slabs built so far, the possible strand thickness lies in a region between 115 and 320 mm. Therefore, it is possible to produce in those plants continuous steel strands for consumable electrodes which—when assembled of several individual strands—have diameters of for instance 600 to 1,000 mm.

The electrode having a polygonal cross section, compared to a round strand electrode, has the advantages of a simpler and operationally safer production. Round strands with large diameters require plants that are complex in their construction, and are difficult to cast without cracks.

All electrodes produced according to this method can be well utilized for the initially-mentioned melting processes, in particular for the electroslag remelting process using round moulds, after the electrode parts have been sand-blasted or cleaned in another way for removing the cinder skin prior to assembling. The chemical composition and the diameter are uniform over the length of these consumable electrode.

What we claim is:

1. In a method of producing a consumable electrode of large diameter, having a substantially uniform chemical composition over its entire length and total cross section, to be used for remelting, for example electroslag remelting, said consumable electrode being assembled of at least two adjacently arranged individual longitudinal parts, the improvement which comprises the steps of:

continuously casting said at least two longitudinal parts in a manner so as to form strands having polygonal cross sections,

assembling said at least two individual longitudinal parts so as to form a polygonal overall cross section,

providing a common gripping head for an electrode holding means, and

welding together the end faces of said at least two individual longitudinal parts with said common gripping head.

* * * * *

428-408

C6306 OR 4,339,328

[redacted] [redacted] [redacted]

United States Patent [19]

Stadelhofer et al.

[11] **4,339,328**

[45] **Jul. 13, 1982**

[54] **PROCESS FOR THE PRODUCTION OF HIGH GRADE CARBONACEOUS BINDERS**

[75] Inventors: **Jürgen Stadelhofer**, Dortmund; **Heinz-Gerhard Franck**, Bad Soden-Neuenhain; **Helmut Köhler**, Mulheim an der Ruhr; **Heinrich Louis**, Duisburg, all of Fed. Rep. of Germany

[73] Assignee: **Rütgerswerke Aktiengesellschaft**, Frankfurt am Main, Fed. Rep. of Germany

[21] Appl. No.: **291,889**

[22] Filed: **Aug. 11, 1981**

[30] **Foreign Application Priority Data**

Sep. 3, 1980 [DE] Fed. Rep. of Germany 3033075

[51] **Int. Cl.**^{3} **C10G 1/00;** H01B 1/04; C10C 0/00

[52] **U.S. Cl.** .... **208/8 LE;** 208/23; 252/502; 373/88; 204/294

[58] **Field of Search** .... 208/8 LE, 23; 252/502; 13/18 R, 18 B; 204/294

X 2006 H

X2027T

[56] **References Cited**

U.S. PATENT DOCUMENTS

3,849,287	11/1974	Gleim et al.	208/8 LE
3,966,585	6/1976	Gray et al.	208/8 LE
4,040,941	8/1977	Yamada et al.	208/8 LE
4,072,599	2/1978	Bullough et al.	204/294
4,188,235	2/1980	Espenscheid et al.	252/502 X

FOREIGN PATENT DOCUMENTS

1105379	4/1961	Fed. Rep. of Germany	252/502

Primary Examiner—Delbert E. Gantz
Assistant Examiner—William G. Wright
Attorney, Agent, or Firm—Beveridge, DeGrandi & Kline

[57] **ABSTRACT**

A process is described for the production of high grade carbonaceous binders, wherein an aromatic high grade carbonaceous material is produced from 5–40% by weight of reduced or low ash coal or similar carbon containing raw materials by treatment with 20–80% by weight of high-boiling aromatic solvents, derived from coal, and 15–50% by weight of high-boiling aromatic solvents, derived from mineral oil, at temperatures of 300°–420° C. and for a reaction period of 1–4 hours, at a reaction pressure of up to 50 bar, and is optionally freed from low-boiling components.

6 Claims, No Drawings

PROCESS FOR THE PRODUCTION OF HIGH GRADE CARBONACEOUS BINDERS

The invention relates to a novel process for the production of high grade carbonaceous binders by treatment of reduced or low ash coal or similar carbon-containing raw materials at elevated temperature and elevated pressure, using aromatic solvents derived from coal and mineral oil.

In the production of a great number of metals, electrothermal refining processes are employed in the technology, in which carbon electrodes find application. Examples of refining processes of this kind are the production of electric steel and the Hall/Heroult-process for the production of technically pure aluminium. Carbon is required in large quantities for the latter process, since up to 0.5 tons of technical carbon is consumed for the production of 1 ton of aluminium, (G. Collin, W. Gemmeke, Erdöl und Kohle (Petroleum and Coal), 30, 25, 1977).

The electrodes, employed in that case, consist of a carbon lattice, which is usually produced from coke through the delayed coking of mineral oil residues or from pitch coke by the coking of coal tar pitch, and a suitable binder.

Thermally re-conditioned coal tar pitch has hitherto been mainly used as binder, due to its excellent binder properties.

Binders, based on mineral oil derivatives, have hitherto not attained the superior properties of coal tar pitch and therefore have found only limited application in industrial practice.

Although the qualitative evaluation of electrode binders is largely empirical, (see, for example, B. E. A. Thomas, Gas World, p 51, 1960; C. R. Mason, Fuel, 49, 165, 1970), there are certain fundamental conditions regarding the suitability of a binder.

In this connection, a usable electrode binder must fulfill the following quality criteria:

coking residue (according to Conradson)	>50%
ash content	0.3% max.
quinoline-insoluble content	>7%
toluene-insoluble content	>25%
softening point (K.S.)	>80° C.-120° C.

Furthermore, a low sulphur content, (<1%), a low metal content as well as suitable boiling behaviour, (initial boiling point >270° C.), are desirable.

In order to avoid the exclusive dependence on binders, derived from coal tar, in the production of electrodes, attempts have not been lacking to employ residues, having an increased proportion of mineral oil derivatives, as raw materials for binders.

Owing to the differing chemical nature of the residues from mineral oil chemistry, by comparison with high-aromatic coal tar pitch, however, the solution of this problem is extremely difficult.

As has been explained above, the most important property for a good electrode binder is a high coking residue. Owing to the predominantly aliphatic nature of residues derived from mineral oil, elaborate thermal or chemical aromatic conversion is necessary for obtaining high coking residues. Thus, for example, U.S. Pat. No. 4,039,423 describes a process according to which a decantation oil from catalytic cracking is heated under pressure to temperatures >413° C., the heat-treated pitch is separated from low-boiling components, for obtaining a softening point of 65°-121° C., and the pitch, thus obtained is further thermally re-conditioned by blowing through with air or oxygen.

West German Offenlegungsschrift No. 22 32 268 describes a process, according to which residues from the vapour cracking of mineral oil fractions are refined to binders. The disadvantage of this process is that oxidative polymerisation and drastic condensation with Lewis acids, particularly aluminium chloride or iron chloride, is necessary for obtaining the high-aromatic properties required.

Apart from the thermal process steps that have to be undertaken, these processes have the disadvantage that the yield of binder, (related to the oil employed) is <60% and thus large proportions of coupling products arise. Besides, despite the elaborate aromatic conversion, the obtainable coking residues only appear at the lower limit of the desirable grades.

Another attempt at producing electrode binders on a basis, independent of coal tar pitch, is reported on by V. L. Bullough et al., (Light Metals, p. 483, 1980; C. J. McMinn. Ed; The Metallurgical Society of AIME, Warrendale, Pa., 1979).

According to this process, a pitch-like product, obtained by solvent-refining of coal, using molecular hydrogen at relatively high pressures, (SRC pitch) is fluxed with anthracene oil for adjusting the desired softening point.

Owing to the relatively low coking residue of the electrode binder, produced in this way, the quality of this coal-derived binder is still capable of further improvement. Besides, since anthracene oil preferentially serves for the production of important chemical raw materials for the dyestuff industry, it is available for these purposes only to a limited extent. Moreover, elaborate filtration or some other thermo-mechanical separation of the ash components are required in a process step, preceding the production of the electrode binder, for the production of the SRC pitch. This process step presents the actual problem step in coal liquefaction and, despite numerous efforts, is still far removed from technological perfection.

It was therefore an object of the present invention to develop a simple process for the production of high grade carbonaceous binders and to produce electrode binders, having the known good properties of coal tar pitch, on a raw material basis, largely independent of coal tar pitch.

According to the invention, this problem is solved by a process for the production of high grade carbonaceous binders in that an aromatic high grade carbonaceous material is produced from 5-40% by weight of low ash coal or similar carbon-containing raw materials by treatment with 20-80% by weight of high-boiling aromatic solvents, derived from coal, and 15-50% by weight of high-boiling aromatic solvents, derived from mineral oil, at temperatures of 300°-420° C., for a reaction period of 1-4 hours, at a reaction pressure of up to 50 bar, and is optionally freed from low-boiling components.

By disintegration of reduced ash coal or similar carbon-containing materials with a combination of converted aromatic residues from mineral oil processing or petrochemistry and high-boiling aromatic oils from the refining of coal tar, a low ash content, homogeneous high grade carbonaceous material is produced, which is suitable as an impregnating agent, e.g. for graphite electrodes, and the physico-chemical properties thereof can be adjusted, if desired, by high-aromatic additives, such as coal tar hard pitch or hard pitch from the processing of pyrolysis oils, for use as electrode binder.

The high grade carbonaceous material thus obtained is optionally freed by distillation, up to 5% by weight, from low boiling components and homogeneously mixed with 0-60% by weight of hard pitch for the production of the electrode binders. The materials used as principal raw materials for the production of electrode binders by the process according to the invention are those that hitherto could not be utilised for reasons of quality for the production of high grade electrode binders. According to the invention, these are coal and, for the disintegration of the latter, residues from the vapour cracking of naphtha or gas oil, residues from cat crackers, residues from the delayed coking as well as high-boiling aromatic distillates from the refining of coal tar, having an average boiling point >350° C. For the final adjustment of the flow properties, of the coking residue and further important quality criteria, up to 60%, (related to high grade carbonaceous material, produced by disintegration of coal), of distillation residues from the processing of coal tar pitch or, preferably, from the distillative processing or pyrolysis oil, having a softening point of 40°-160° C. (K.S.), are employed according to the invention.

The choice of the grade of coal is of minor importance in the process according to the invention. Preference is given, however, to coals having a high carbon content; the nature of the ash should be such that separation is possible according to known processes (e.g. U.S. Pat. No. 4,134,737) the entire disclosure of which is relied on and incorporated herein by reference.

Ash reduction processes of this kind, however, are not a subject of the Patent Application. In order to ensure the wide scope of application of the present process, an ash reduction process was chosen, according to which the ash content of the coal is reduced by particularly intensive chemical treatment with acids and bases.

Other ash reduction processes, which provide for ash reduction under similar conditions, should therefore be similarly suitable for the production of low ash content coals for the process according to the invention.

When extra-high purity coals, having an ash content of <1%, are used, ash separation may even become superfluous.

The ash reduction processes for coal generally provide for drastic chemical reactions, using acids, bases and oxidising agents, which have an influence on the dissolution of the coal; particularly in the case of oxidative treatment of coal, significant deterioration of the solubility in aromatic solvents is generally assumed, (C. Kröger, Erdöl und Kohle (Petroleum and Coal), 9, 1956, 441).

Surprisingly, however, it has been shown that, despite the drastic conditions, utilized in the ash reduction, and the chemical modification of the coal, which it involves, good homogenisation with the solvent mixture can be obtained and high grade electrode binders can thus be produced.

Low ash content is desirable in the choice of the solvent components employed for the disintegration of the coal; this condition is particularly fulfilled in the case of pyrolysis oils obtained from the vapour cracking of mineral oil fractions, in the case of distillates from coal tar refining and in the case of residual oils from delayed coking and similarly, in the case of selected coal tar pitches. However, residues from catalytic cracking are equally suitable as complementary solvents, if the ash content is low.

In the process according to the invention, however, pyrolysis oils from the vapour cracking of mineral oil fractions are preferably used, since these oils have a marked tendency to polymerize under the extremes of the reaction conditions which may be used in the process according to the invention, which is advantageous for attaining a high coking residue.

The coal tar oils, preferably used, are distillates from the heat/pressure treatment of coal tar pitch, having an average boiling point >350° C. or comparable distillates from the distillative processing of coal tar.

Thus a simple process for the production of high quality electrode binders becomes available, in which especially the widely available raw materials, coal and residues, derived from mineral oil, can find application as main components.

The production of the binders according to the invention is described in Examples 1 to 3.

A conventional electrode binder, having the known good properties and produced on the basis of coal tar pitch, (Comparative Example 4), serves for comparison.

In this connection, QI denoted quinoline-insoluble matter and TI denoted toluene-insoluble matter. The softening points were determined according to the Krämer-Sarnow method. All quantitative data refer to parts by weight; similarly, all percentage data denote percent by weight.

EXAMPLE 1

The production of reduced ash coal was effected following U.S. Pat. No. 4,134,737. According to the latter, 1 part by weight of finely divided Westerhold open-burning coal, (ash content: 7.8%; volatile content of material, free from water and ash: 38%) is treated for 3 hours with 4 parts by weight of 10% caustic soda solution at 250° C.

The washed reaction product is further treated with two parts by weight of dilute sulphuric acid (5%) at 80° C. and for a reaction time of 30 minutes.

The final treatment is carried out with 1.5 parts by weight of 18% nitric acid at 75° C. and for a reaction period of 1 hour.

The ash content of the coal, treated according to these 3 different process steps, is 0.9%. The yield is quantitative.

For the production of electrode binders, a reaction mixture consisting of

30 parts by weight of reduced ash Westerhold coal,
30 parts by weight of pyrolysis residue from the vapour cracking of naphtha, (initial boiling point: 220° C., 50% at 360° C.) and
40 parts by weight of pitch distillate from the heat/pressure treatment of coal tar pitch (initial boiling point: 305° C., 50% at 416° C., 80% at 455° C.),

is homogenised, with thorough mixing, at 375° C. and for a reaction time of 2 hours. The maximum reaction pressure is 24 bar. After separation of 3% of low-boiling components, a pitch-like high-grade carbonaceous material is obtained in 95% yield, which is homogeneously mixed with 30% of hard pitch from the processing of coal tar pitch/normal pitch, (for production see U.S. Pat. No. 2,985,577). The softening point of this hard pitch is 160° C. (K.S.). The binder, produced in this way, is characterised by the data given in the table.

EXAMPLE 2

30 parts by weight of reduced ash Westerhold open-burning coal are treated with

20 parts by weight of pitch distillate from the heat/-pressure treatment of coal tar pitch,

40 parts by weight of pyrolysis residue from the cracking of naphtha, as described in Example 1 and 10 parts by weight of cat cracker residues at 400° C. for a reaction time of 3 hours. The maximum reaction pressure is 40 bar.

The reaction product, obtained in 95% yield after separation of 3% of low-boiling components, is a high-grade carbonaceous material, having a softening point of 60° C. (K.S.). This high-grade carbonaceous material is homogeneously mixed with 50 parts by weight of hard pitch, derived by distillation from pyrolysis residues, which arise in the cracking of naphtha. The softening point of this hard pitch is 135° C. (K.S.).

The binder, produced in this way, is characterised by the data, given in the table.

EXAMPLE 3

The procedure is as in Example 1.

The coal used is a gas coal, having a volatile content of 26.5 and an ash content of 1.9%. Ash reduction is effected as described in Example 1; the residual ash content of the coal is 0.8%.

30 parts by weight of reduced open-burning coal are reacted with

40 parts by weight of pitch distillate from the heat/-pressure treatment of coal tar pitch and

30 parts by weight of pyrolysis oil from the vapour cracking of naphtha,

with thorough mixing, at 400° C. and for a reaction time of 2 hours.

The maximum reaction pressure is 18 bar.

A pitch-like high grade carbonaceous material, having a softening point of 80° C. (K.S.), is obtained in 97% yield.

This high grade carbonaceous material is separated from low-boiling components (3%) and homogeneously mixed with 30% a hard pitch, having a softening point of 135° C. (K.S.) and originating from the distillative processing of pyrolysis oil.

The binder, produced in this way, is characterised by the data given in the table.

EXAMPLE 4: (Comparative example)

For comparison's sake, a conventional electrode binder based on coal tar pitch, is listed in the table.

Characteristics of the Electrode Binders

	Product Porperties				
Raw Material Components	Coking Residue (According to Conradson)	Softening Point (K.S.) °C.	Ash Content %	QI %	TI %
Example 1: High grade carbonaceous material consisting of 30 parts by weight Westerholt coal, 30 parts by weight pyrolysis residue, 40 parts by weight pitch distillate, and 30 parts by weight hard pitch	51	90	0.28	13	38
Example 2: High grade carbonaceous material consisting of 30 parts by weight Westerholt coal, 20 parts by weight pitch distillate, 40 parts by weight pyrolysis residue, 10 parts by weight cat cracker, and 50 parts by weight hard pitch	54	93	0.29	10	32
Example 3: High grade carbonaceous material consisting of 30 parts by weight gas coal, 40 parts by weight pitch distillate, 30 parts by weight pyrolysis oil, and 30 parts by weight hard pitch	54	92	0.26	14.5	35
Example 4: (Comparative Example) Conventional electrode binder material from coal tar pitch	54	90	0.27	13	35

Explanation:
QI = quinoline-insoluble
TI = toluene-insoluble

We claim:

1. A process for the production of high grade carbonaceous binders, comprising producing an aromatic high grade carbonaceous material by treating from 5–40% by weight of low ash coal or similar carbon-containing raw materials with 20–80% by weight of high-boiling aromatic solvents, derived from coal, and 15–50% by weight of high-boiling aromatic solvents, derived from mineral oil, at temperatures of 300°–420° C. and for a reaction period of 1–4 hours, at a reaction pressure of up to 50 bar.

2. The process of claim 1 wherein the solvents are freed of low-boiling components.

3. The process according to claim 1, wherein the product obtained is homogeneously mixed with 0–60% by weight of hard pitch, derived from mineral oil or derived from coal.

4. A binder composition produced by the method of claims 1, 2 or 3.

5. An electrode impregnated with a binder produced by the method of claims 1, 2 or 3.

6. A method of making a graphite electrode suitable for use in the electro-thermal refinement of metal ores comprising impregnating a carbon lattice with the binder composition produced by the method of claims 1, 2 or 3.

* * * * *

United States Patent [19]

Schieber et al.

[11] **4,383,321**

[45] **May 10, 1983**

[54] CARBON ELECTRODE, IN PARTICULAR A GRAPHITE ELECTRODE FOR PRODUCING STEEL

[75] Inventors: **Franz Schieber**, Röthenbach; **Dieter Mayer**, Schwabach, both of Fed. Rep. of Germany

[73] Assignee: **C. Conradty Nurnberg GmbH & Co KG**, Pegnitz, Fed. Rep. of Germany

[21] Appl. No.: **221,028**

[22] Filed: **Dec. 29, 1980**

[30] **Foreign Application Priority Data**

Jul. 25, 1980 [DE] Fed. Rep. of Germany 3028348

[51] **Int. Cl.**³ **H05B 7/085**

[52] **U.S. Cl.** **373/88**

[58] **Field of Search** .... 13/18 R, 18 B, 18 C; 219/145.1; 428/408

[56] **References Cited**

U.S. PATENT DOCUMENTS

1,223,986	4/1917	King	13/18 R X
1,312,256	8/1919	King	13/18 R X
1,312,257	8/1919	King	13/18 R X
2,040,215	5/1936	Rava	13/18 R
3,867,667	2/1975	Suga	13/18 R

Primary Examiner—Roy N. Envall, Jr.
Attorney, Agent, or Firm—Gifford, Van Ophem, Sheridan and Sprinkle

[57] ABSTRACT

A carbon electrode, in particular a graphite electrode for producing steel which can be used for electric arc melting furnaces of conventional design. The electrode comprises a metal-containing protective layer, and fusion of the contact jaws of the electrode holder with the metal-containing protective layer is avoided by covering at least part of the electrode surface by a graphite-containing material.

11 Claims, 2 Drawing Figures

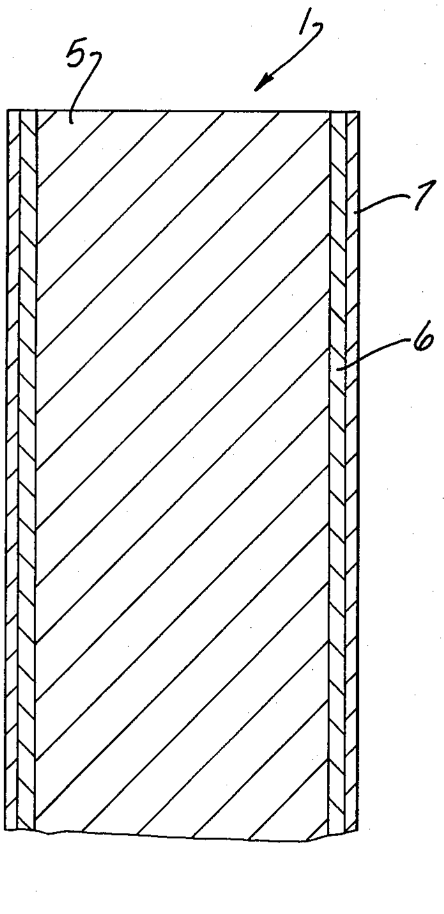

Fig-1

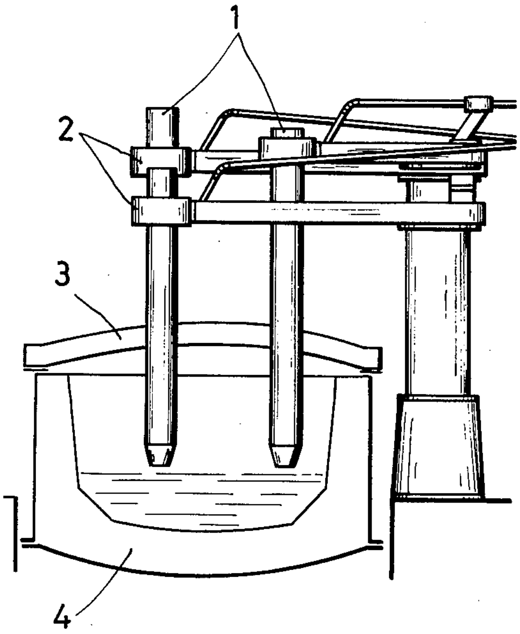

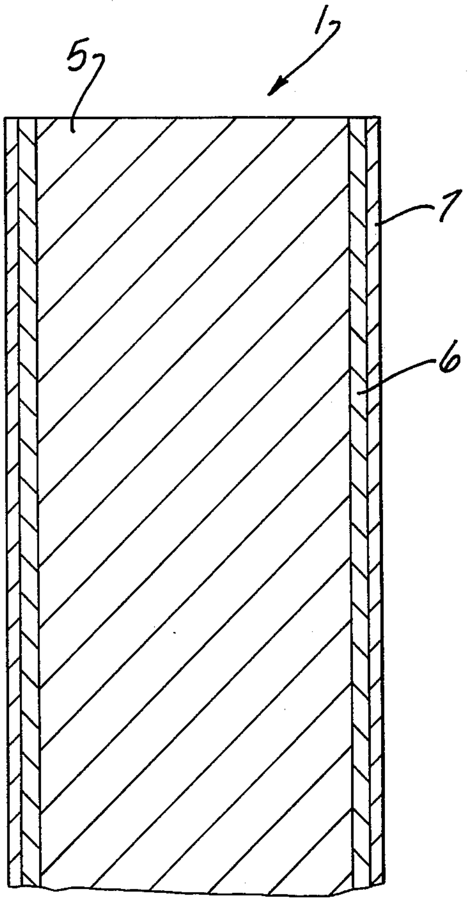

Fig-2

CARBON ELECTRODE, IN PARTICULAR A GRAPHITE ELECTRODE FOR PRODUCING STEEL

BACKGROUND OF THE INVENTION

I. Field of the Invention

The invention relates to a carbon electrode, in particular a graphite electrode for producing steel, comprising a metal-containing coating to increase the electrical conductivity and/or to decrease the oxidation loss on the lateral electrode surface.

Metal-containing protective coatings have been developed in order to reduce surface oxidation of graphite electrodes and, hence, to reduce the consumption of the surface of the electrode. These protective coatings consist for example of carbides, silicides, oxides, metals or combinations of such materials and are applied onto the electrode surface by spraying and by subsequently being burned-in by means of an electric arc, whereby they are securely connected to the electrode surface.

A coating consisting of aluminum and silicon carbide has proven to be particularly useful for this purpose. After the coating has been applied, the graphite electrode has a metallic, rough coat, the conductivity of which nearly corresponds to that of the aluminum, and which securely adheres to the graphite surface because of the preceeding electric arc treatment. Starting at about 500° C., the protective coating becomes slightly plastic, so that it then becomes impermeable to gas. With increasing temperature, it is gradually converted to oxide beneath the electrode holder, but it retains its protective function.

The advantage attained by such coated graphite electrodes, namely the reduction consumption and erosion of the surface of the electrode is opposed by a considerable drawback resulting from the fact that the working material of the electrode holder must be matched to the requirements of the metallic coating surface introduction of the electrode through the furnace cover must be such that the coating is not scraped off. Therefore, in order to avoid fusion of the contact jaws (customarily consisting of copper) with the metallic coating of the graphite electrodes, the copper contacts must be replaced by appropriate contacts, such as those made of graphite. Furthermore, it has been necessary to employ a well effective sealing ring for each electode, so that more extensive contaminations of the coating and of the contacts are avoided.

These types of re-constructions of furnaces needed when changing over to coated electrodes have a considerable cost.

Now even though it has become known from German OS No. 22 51 590 to spray graphite a as heat-resistant material onto an electrode surface coated with aluminum in a process for producing protective coatings on objects made of carbon, this measure nevertheless only serves to increase the melting point of the coating. After the graphite has been applied, this higher-melting coating is formed by fusion of the graphite to the aluminum using an electric arc.

A similar use of graphite is known in connection with a process for producing aluminium-containing protective coatings on carbon products (German AS No. 1 646 679), wherein a spread of graphite is applied onto the aluminum previously sprayed onto the carbon article. This graphitic spread is then directly exposed to processing in the electric-arc furnace, whereupon the surface of the thus produced coating is formed.

SUMMARY OF THE PRESENT INVENTION

Therefore, it is an object of the present invention to provide a carbon electrode, in particular a graphite electrode of the mentioned type such that it is possible to use such electrodes for electric arc melting furnaces of conventional design, without needing to structurally alter the furnaces in the above-described manner.

In order to accomplish this object, that is, in order to avoid melting together of the contact jaws with the metallic protective layer, the invention provides for at least partly covering the surface of the metalically coated electrode with a graphite-containing material, which according to an advantageous embodiment of the invention may consist of a mixture of 700 parts of graphite powder having a grain less than 1000 μm, 100 to 400 parts of a curable synthetic resin, 20 to 80 parts of a water-soluble adhesive and water. A phenol-novolak hexamethylene tetramine resin has proved particularly serviceable as the synthetic resin, and a polyvinyl alcohol is particularly suited as the adhesive.

The preferred average thickness of the layer of graphite-containing material is from 0.1 to 2.0 mm, whereby it is ensured that dust particles that deposit on the surface of the jaws are embedded into the graphite-containing material when the jaws are hydraulically urged against the electrode surface and thus do not adversely affect the electrical contact.

The graphite-containing material covering the metal-containing surface may form a layer which securely adheres to the metal-containing surface, for example, which is sprayed or brushed on. There also is the possibility, however, of realizing the advantages obtained from using a graphite-containing material in the region of the contact jaws with a material layer that does not completely securely adhere to the metal-containing surface or that even only loosely rests on it, for example in the form of a film.

The use of the graphite-containing material layer on the metallic electrode surface not only has the advantage of whole or at least partly avoiding furnace reconstructions which otherwise would be required, but has the further advantage of allowing the use of contact jaws of copper, such as is conventional with uncoated graphite electrodes.

Previously known measures are neither intended for, nor do they make obvious, elimination of the drawback of required furnace reconstruction when using graphite electrodes provided with only customary metallic protective coatings.

BRIEF DESCRIPTION OF THE DRAWINGS

A better understanding of the present invention will be had upon reference to the following detailed description, when read in conjunction with the accompanying drawing, wherein like reference characters refer to like parts, and in which:

FIG. **1** is a schematic side view of the preferred embodiment of the present invention; and

FIG. **2** is a side cross-sectional view of the preferred embodiment of the present invention.

DETAILED DESCRIPTION OF THE PREFERRED EMBODIMENT OF THE PRESENT INVENTION

With reference now to FIG. **1**, the present invention is thereshown and comprises the electrodes **1**, which are held by contact jaws **2** that are hydraulically urged against the electrode surface, and which extend in a known manner through the cover **3** of the electric-arc furnace **4**. The protective coating of the electrodes in such a furnace is exposed to very severe operating conditions because when oxygen is blown in, slag splatters up to the furnace cover and covers the electrode surface. Despite a good sealing of the electrodes as they pass through the cover with the aid of known sealing devices, a certain contamination of the electrode surface in the region of the contact jaws **2** can frequently not be entirely prevented. Due to the fact that the graphite-containing material described below is applied onto the metal-containing protective coating in a layer thickness of about 0.1 to 2.0 mm and is somewhat ductile, the hydraulic contact jaws, which consist of copper, can urge the dirt particles in the region of their contact surfaces into the graphite-containing material, with disadvantageous effects on the transfer resistance between jaw and electrode thus being avoided. There is no welding between jaws and graphite-containing material, so that the jaws may consist of copper, and the release of the contact jaws from the electrode surface for the purpose of resetting the electrode is unrestricted.

As shown in FIG. **2**, the electrode **1** according to the present invention is provided with a core **5** of carbon or graphite, covered by a first metal-containing coating **6** and a second protective coating **7** of graphite-containing material disposed on the first coating **6**. The second coating **7** covers at least the area on the electrode connectable to the jaws **2** of an electrode holder. Thus fusion of the jaws **2** to the electrode **1** is prevented.

ILLUSTRATIVE EMBODIMENT

The preferred graphite-containing material comprises a mixture of about 700 parts by weight of Ceylon graphite powder, having a particle size of less than 63 μm; 150 parts by weight of finely ground phenyl-novolak hexamethylene tetramine resin; 30 parts by weight of commercial polyvinyl alcohol; and water in a quantity sufficient to suspend or dissolve these mixed powders to obtain a paste that is capable of being spread or sprayed.

This suspension is spread several times onto a graphite electrode provided with an aluminum coating and having a diameter of 355 mm and a length 2000 mm, wherein air drying takes place between each spreading operation, and with an average coating thickness of the graphite-containing material of 0.1 to 1.0 mm ultimately resulting.

The entire air-dried graphite-containing layer of material is then briefly heated to from 150° to 180° C. in order to condense the resin.

The above example of producing the electrode according to the invention can be extensively modified, in particular as regards the composition of the graphite-containing material, but also with regard to the application of the material. Such application may take place, instead of by spreading or brushing-on, also by being sprayed onto the graphite electrode which has been provided with a metal-containing covering.

The composition of the graphite-containing material may be modified in the following ways: use of a graphite powder, not necessarily Ceylon graphite, having a particle size of less than about 1000 μm; use of about 100 to 400 parts of a curable synthetic resin, not necessarily a finely ground phenol-novolak hexamethylene tetramine resin; and use of about 20 to 80 parts of a water-soluble adhesive, not necessarily polyvinyl alcohol.

The finished electrode can be directly inserted into the conventional jaws **2** of an electric arc melting furnace for producing steel, such as shown in FIG. **1**. The use of this electrode does not result in any welding whatsoever between its surface and the jaws, which may for example consist of copper.

Because the graphite-containing material may be spread, brushed, or sprayed onto the electrode surface, the material is securely anchored to the irregularities of the metal coating.

However, it also is conceivable to cover the metal-containing electrode surface with the graphite-containing material in a manner in which no continuous mechanical solid connection or, permanent connection is established between the material and the surface. Hence, only a temporary connection is established, for example with the aid of a film of graphite-containing material, which film is wound around the electrode.

Thus, the electrode according to the present invention provides a way in which metallically coated graphite electrodes may be employed in electric arc furnaces without the costly oxidation and erosion conventionally experienced, by providing a second graphite-containing coating upon at least a part of the electrode. Having described our invention, however, many modifications thereto will become apparent to those skilled in the art to which it pertains without deviation from the spirit of the invention as defined by the claims.

We claim:

1. In a carbon electrode for an electric furnace, said electrode having a first coating comprising a metal containing composition, and said electrode having upon its surface an area connectable to the jaws of an electrode holder, the improvement therein comprising a second coating upon said first coating, said second coating comprising a graphite containing material, and said second coating covering at least said area on said electrode, whereby fusion of said jaws of said electrode holder to said electrode is prevented.

2. The electrode according to claim **1** wherein said second coating is sufficiently ductile so as to accept intrusion of splatter from said furnace into said second coating without said fusion of said jaws and said electrode.

3. The invention according to claim **1** wherein said second coating comprises a mixture containing about 700 parts of graphite powder, said powder having a grain size of less than 1,000 micrometers; 100–400 parts of a curable synthetic resin; 20–80 parts of a water-soluble adhesive; and a quantity of water sufficient to permit application of said mixture to said electrode.

4. The invention according to claim **3** wherein said synthetic resin is a phenol-novolak hexamethylene tetramine resin.

5. The invention according to claim **3** wherein said water-soluble adhesive is commercial polyvinyl alcohol.

6. The invention according to claim **1** wherein the average layer thickness of said second coating is about 0.1 to 2.0 milimeters.

7. The invention according to claim **1** wherein said first coating consists predominantly of aluminum.

8. The invention according to claim **1** wherein said second coating forms a mechanical, solid connection to said electrode.

9. The invention according to claim **1** wherein said second coating rests loosely on said first coating and without a continuous, mechanical solid connection to said first coating.

10. The invention according to claim **1** wherein said electrode comprises a graphite electrode for producing steel.

11. The invention according to claim **1** wherein said coating is formed from a film of graphite-containing material, said film being wound around said electrode.

* * * * *

United States Patent [19]

Karagoz et al.

[11] **Patent Number: 4,513,425**

[45] **Date of Patent: Apr. 23, 1985**

[54] **COMPOSITE ELECTRODE FOR ARC FURNACE**

[75] Inventors: **Berch Y. Karagoz,** Grand Island; **Martin M. Turban,** Lewiston; **Lyman T. Moore,** Niagara Falls; **Mark D. Travers,** Ransomville, all of N.Y.

[73] Assignee: **Great Lakes Carbon Corporation,** New York, N.Y.

[21] Appl. No.: **514,266**

[22] Filed: **Jul. 15, 1983**

[51] **Int. Cl.**^{3} **H05B 7/06**

[52] **U.S. Cl.** **373/88;** 373/90; 373/93

[58] **Field of Search** 373/91, 92, 93, 88, 373/82, 90

[56] **References Cited**

U.S. PATENT DOCUMENTS

1,018,003	2/1912	Redlich	373/92
3,588,307	6/1971	Kegel et al.	373/88

FOREIGN PATENT DOCUMENTS

77513	4/1983	European Pat. Off.	373/93

Primary Examiner—A. D. Pellinen
Assistant Examiner—Susan A. Steward
Attorney, Agent, or Firm—Adrian J. Good

[57] **ABSTRACT**

A composite water-cooled electrode for electric arc steel furnaces comprises a tubular graphite body held in compression by means of tension stressed internal water supply pipe located between a metal header at one end and a hollow metal nipple at the other end of the electrode.

13 Claims, 4 Drawing Figures

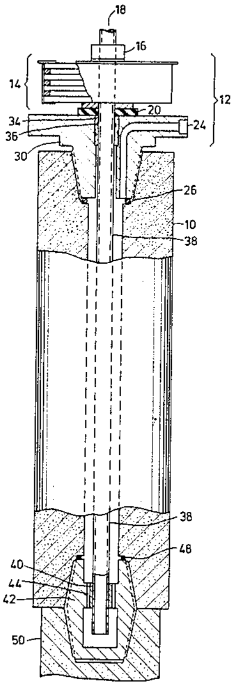

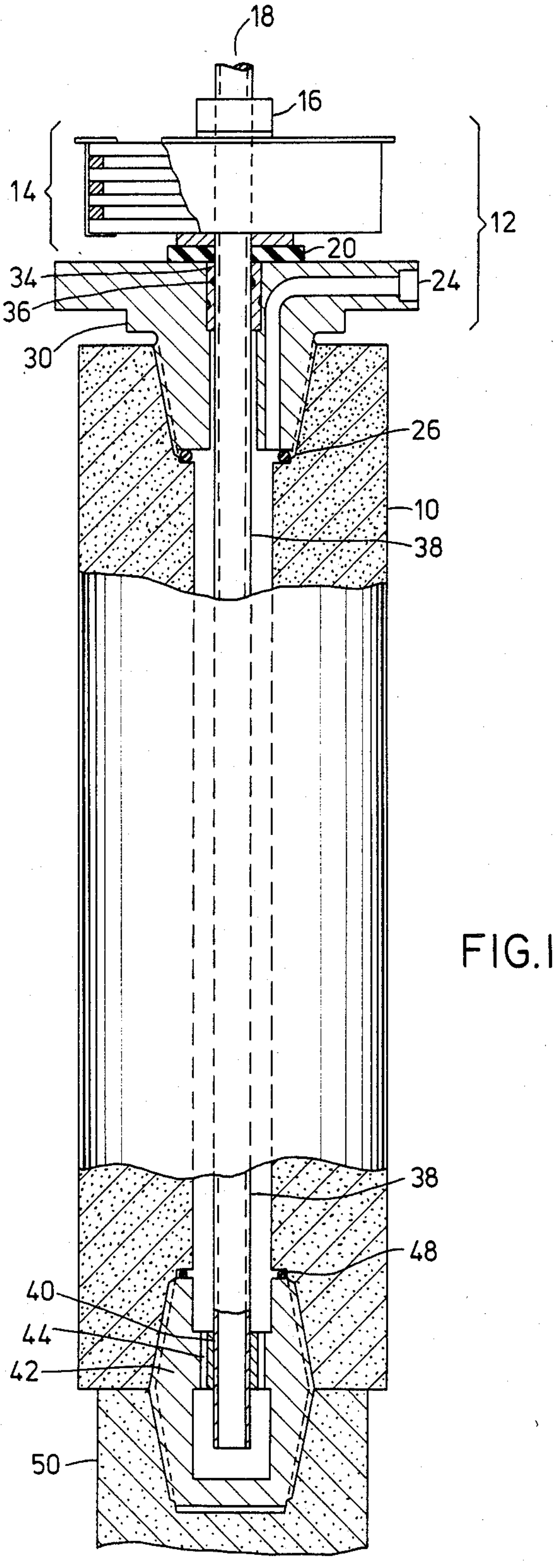

FIG. 1

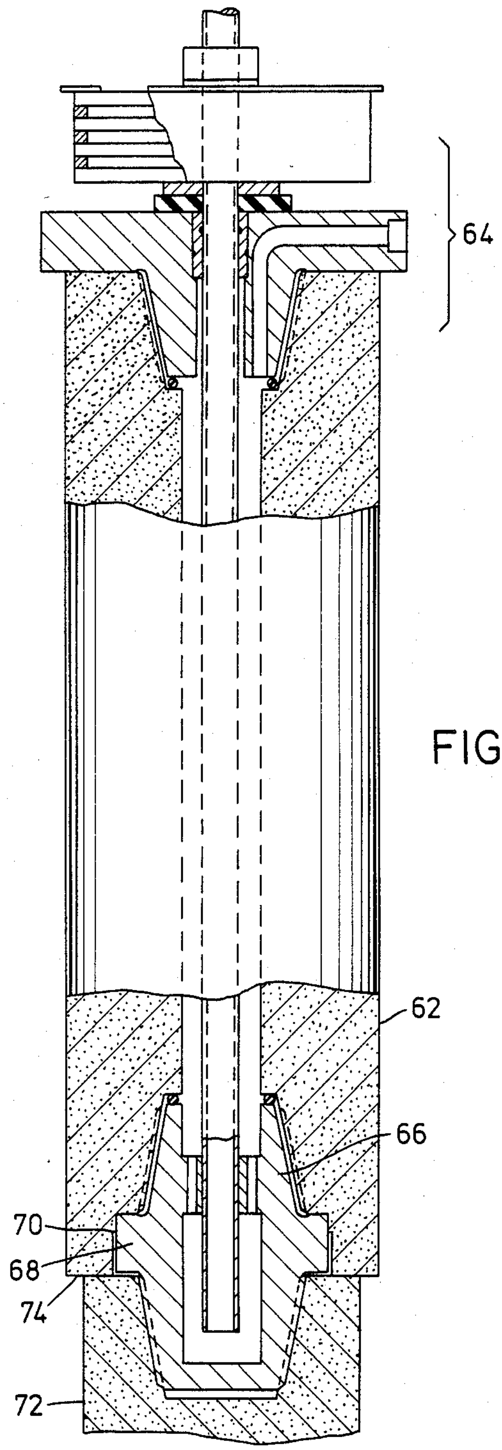

FIG. 2

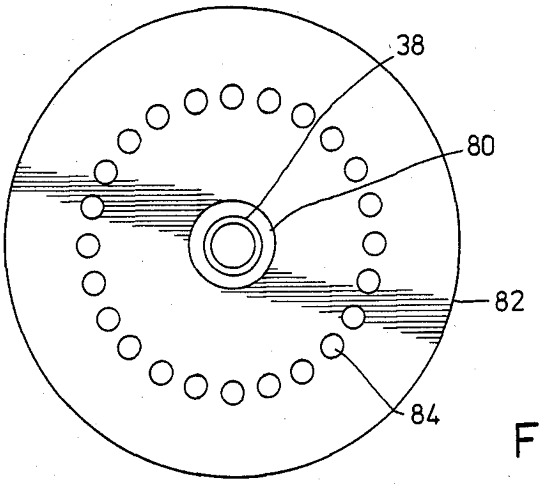

FIG. 3

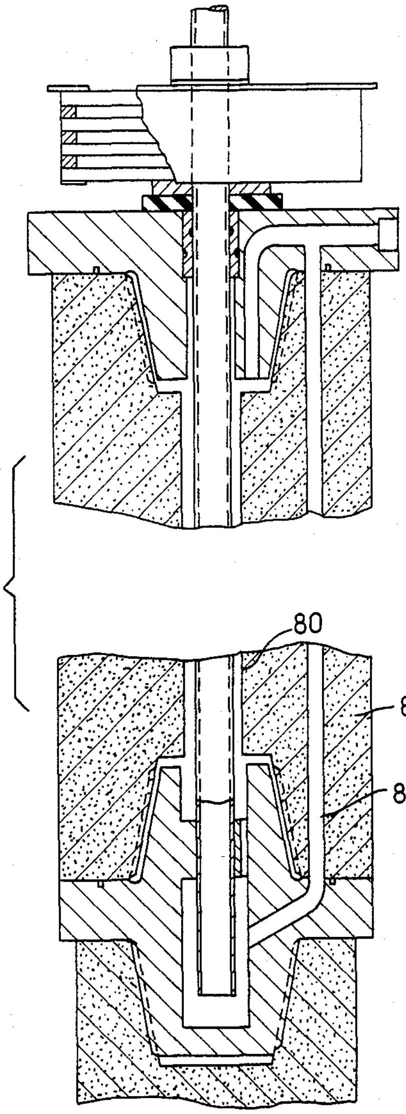

FIG. 3A

COMPOSITE ELECTRODE FOR ARC FURNACE

DESCRIPTION

This application is related to Ser. No. 514,267 also filed July 15, 1983 by Turban et al.

BACKGROUND OF THE INVENTION

1. Field of the Invention.

The Invention relates generally to an electrode for electric arc furnaces, and particularly to a composite electrode comprising a liquid-cooled long-lived but consumable upper portion attached to a conventional electrode (or consumable tip portion) joined to the upper portion by liquid-cooled connection means.

2. Description of the Prior Art.

The conventional material employed in electrodes for electric arc furnaces is graphite. These electrodes are consumed in use, for example in electric arc steel making furnaces, due to erosion and corrosion caused by oxidation, sublimation, spalling and other factors. This consumption involves tip losses, column breakage losses and particularly surface oxidation losses. An average electric furnace consumes four to eight kilograms of graphite per metric ton of steel produced.

One method for reducing the consumption of graphite electrodes in arc furnaces has been the application of a protective coating or cladding material to the electrodes with oxidation resistant materials. These coatings generally increase the contact resistance to the electrode power clamp, and some are corrosive, as they are based on phosphoric acid. Consequently, they have not found wide acceptance.

Another means for reducing graphite electrode consumption involves the utilization of fully nonconsumable electrode systems. These systems employ full length liquid-cooled electrodes with selected apparatus to protect the electrode from the extreme temperatures of the arc. Although such systems appear in patent literature, this type has not been commercially successful.

It has been suggested heretofore that composite electrodes comprising carbon or graphite portions attached to a water-cooled metallic piece would provide means for reducing electrode consumption in arc furnaces. A number of patents have issued on specific composite electrode designs. For example, U.S. Pat. Nos. 896,429 to Becket; 2,471,531 to McIntyre et al.; 3,392,227 to Ostberg; 4,121,042 and 4,168,392 to Prenn; 4,189,617 and 4,256,918 to Schwabe et al.; and 4,287,381 to Montgomery relate to liquid cooled composite electrodes for arc furnaces. Likewise, European patent application Nos. 50,682; 50,683; and 53,200 by C. Conradty, Nurnburg are directed to composite electrode configurations.

OBJECTS OF THE INVENTION

It is the objective of the invention to provide an improved composite electrode for electric arc furnaces.

It is a further objective of the invention to provide a composite electrode wherein consumption of the graphite is substantially reduced.

It is a further objective of the invention to provide a composite electrode which is able to resist the harsh environment of an arc furnace and thereby have a long useful life.

It is a still further objective of the invention to provide a composite electrode which will be useful as a consumable electrode after failure as a permanent electrode.

It is a further object of this invention to provide a composite electrode which takes full advantage of the strength in compression of graphite.

SUMMARY OF THE INVENTION

The invention is essentially a composite water-cooled electrode comprising a graphite heavy-walled tubular body having a central bore, a water supply pipe within the bore, a hollow metal nipple located at the furnace end of the tubular body for attachment of a conventional graphite electrode, a metal header at the upper end of the tubular graphite body, a liquid coolant supply system to cool said body and said nipple, and a system holding the tubular graphite main body of the electrode in compression, thereby increasing the resistance to breakage of the graphite.

The tubular graphite main structure body is made from a graphite arc furnace electrode with a threaded socket at each end. The central bore wall is preferably sealed to prevent water leakage and infiltration into or through the graphite wall. The exterior surface of the body may be treated with an anti-oxidant either by coating or impregnation; however, this is not always necessary. The electrode is normally drilled out with a center hole with a diameter not more than the minor diameter of the socket, leaving a heavy wall thickness preferably at least about $\frac{1}{4}$ of the outside diameter of the tube. The metal connecting nipple is hollow. A coolant supply pipe having an outside diameter (OD) smaller than the inside diameter (ID) of the electrode leads into the cavity from a header bringing coolant into the nipple through the center of the main tube. The coolant then returns header. A flat spring, e.g., a Belleville washer, is preferred; but, upward to the outlet at the header through the annulus between the coolant inlet tube and the bore of the main structure. The header is normally attached to the top of the graphite tube by the socket threads in the upper end of the main tube.

The coolant supply pipe is also used as the means whereby compression is applied to the main tube. The pipe is attached to the nipple and the header and held in tension by a tensioning device at the header. A flat spring, e.g., a Belleville washer, is preferred; but other tensioning devices such as coil springs, air or hydraulic cylinders may also be used, and the invention is not limited to any one means of applying tension.

The inner bore of the tube may be coated with a sealant to eliminate leakage and infiltration of water through the graphite. A two-package epoxy coating is preferred but other water-resistant surface coatings such as phenolic, alkyd, silicone, polyurethane, polyester or acrylic resins may also be used.

This electrode is highly resistant to the heat and aggressive atmosphere of the electric arc furnace and the top portion of the attached consumable electrode in the furnace stays dark in use indicating efficient cooling to a temperature lower than the oxidation temperature, with consequent lessening of oxidation and lower graphite consumption per unit of metal produced, than when using the normal all-graphite solid electrodes.

This electrode also consumes less electricity than prior metal composite electrodes due to the absence of inductive heating losses or parasitic eddy currents which were noted to constitute a high drain on the arc current and to present a large heat loss to the cooling system.

It is a further advantage of the electrode of this invention that when the main structure deteriorates after long service, it may be disassembled, the metal parts used with a new graphite tube, and the failed piece consumed as an electrode in the normal manner.

It is a further advantage that the electrode has a greatly increased strength as compared to an all-graphite column without compression.

DESCRIPTION OF THE DRAWINGS

FIG. 1 shows the complete electrode comprising main graphite tube **10**, header assembly **12** consisting of Belleville spring washer assembly **14**, nut **16**, water inlet **18**, isolator washer **20**, water outlet **24**, upper O-ring seal **26**, water inlet tube **38**, header nipple **30**, and isolator seal bushing **34**, with O-rings **36**. At the lower end of the column are water inlet tube **38** held in place by threaded spider **40**, hollow water cooled metal nipple **42**, return coolant passage **44** in spider **40**, lower O-ring seal **48** and conventional graphite tip electrode **50**.

Graphite main tube **10** is held in compression by tension, applied through nut **16** to Belleville washer springs **14**, to water inlet tube **38** held in nipple **42** by spider **40**. The tension applied to water inlet tube **38** results in an upward thrust or force moment by the nipple against the lower socket of electrode body **10** and also puts the upper part of nipple **42** in compression. Water enters at inlet **18**, passes through water inlet tube **38** to the interior of nipple **42**, returning through the passages **44** in spider **40** to the annulus between water inlet tube **38** and main tube **10** to header **12** and outlet **24**. The electrode is sealed with O-rings.

FIG. 2 depicts another version with electrode **62**, header assembly **64** and nipple **66** with flange **68** housed in counterbore **70**, holding the electrode in compression while allowing facial contact of lower electrode **72** with electrode **62** at interface **74**.

FIGS. 3 and 3A depict a variation of the invention wherein the bore **80** of the main graphite tube **82** may also serve as the coolant inlet and radially distributed passages **84** serve as the coolant outlets through the graphite closer to the surface for more efficient cooling.

The nipple, water inlet tube, and header assembly may be made of any suitable metal such as steel, gray iron, ductile iron, aluminum, copper or stainless steel. Aluminum is preferred for the header and water inlet tubes for its low cost and light weight, while copper, gray iron, ductile iron, or Invar are preferred for the nipple. If the unit fails catastrophically in service, the addition of a gray iron or ductile iron nipple to the heat will not adversely affect the melt analysis, as may occur if the nipple is made of copper, Invar or aluminum.

The main tube is preferably a graphite having a CTE of less than 15×10^{-7} over the range of 0° to 50° C.; otherwise, it may fail from thermal shock.

The CTE of an electrode varies between the longitudinal and transversing directions due to the crystal orientation of the graphite introduced during extrusion. The CTE figure used here is in the transverse direction normal to the long axis of the cylinder.

The exterior of the main tube **10** may be coated with an antioxidant coating such as disclosed in co-pending application Ser. No. 442,651 filed Nov. 18, 1982 by Wilson.

DESCRIPTION OF THE PREFERRED EMBODIMENT

An electrode was made by boring a 4" in. (10 cm) hole in the center of 16 in. diam. (41 cm) ×80 in. (203 cm) graphite electrode and coating the bore with a sealant. The electrode had two threaded truncated conical sockets of the type normally used in the electrode industry. A header assembly including a threaded adapter nipple, O-ring seals, Belleville flat spring washer assembly, tensioning nut, water inlet pipe, and water outlet were attached at the upper end and a hollow threaded biconical nipple attached to the coolant pipe was attached at the lower end. Tension may be applied to the coolant supply pipe by the tensioning nut, placing the graphite electrode under a substantial compressive force of 25 psi. Graphite has a high compressive strength, and can withstand a high stress in compression. The breaking strength of socket threads limits the amount of compressive stress such that the useful stress is much lower than the ultimate stress limits. A 14 in. (36 cm) solid graphite electrode may be attached to the nipple. The electrode is then ready for water hookup and placement in the furnace lamp.

The coolant supply pipe was stainless steel and the header assembly in this instance was aluminum; however, they could be made from other materials with the required tensile strength. The nipple was copper, but might also have been high-strength graphite, ductile iron, gray iron, steel, aluminum, copper, Invar 36 or other low CTE materials.

The electrode string is attached to the nipple in an off-furnace location, positioned in the furnace clamp, and coolant connections made to the inlet and outlet pipes at the header. The increased strength realized by this electrode is particularly useful in some furnaces which use long electrode strings, e.g., three eight foot long electrodes in some furnaces with high roofs.

The problems involved in the metal-structured composite electrodes of arcing at the nipple are overcome in this design by the interchangeability of the metal nipple, which permits easy substitution in case of failure.

Although the perferred embodiment of the electrode has the standard truncated conical threaded sockets at each end identical to those universally used in electric furnaces, fitting the standard biconical nipple, the header and nipple could be attached by other means and the invention is not limited to any specific configuration. The two ends could easily be machined in entirely different manners and the attachments likewise assembled in different manners.

The natural frequency of this design with the graphite in compression, is relatively high, and the column has very low tendency to split due to vibration or oscillation.

The nipples may, of course, be made of a suitable metal such as copper, titanium or ferrous alloy, but may also comprise several materials, e.g., a copper-ferrous combination for good conductivity, low cost, high strength and low CTE.

Invar is a nickel alloy with an essentially zero CTE and is described in the *ASM Handbook*, 9th Ed., as being composed of 36% Ni, less than 1% of Mn, Si, and C combined, and the remainder (63%) Fe.

Most arc furnaces have severely limited working space above the electrodes, making the Belleville washer falt spring tensioning system preferred for its small size and simplicity. A Belleville flat spring washer is a well-known spring manufactured by a large number of suppliers and consists of an elastic dished washer of spring steel.

The minimum electrode wall thickness is determined by the differential between the outside diameter of the electrode and the maximum socket base diameter.

We claim:

1. A water-cooled composite tubular electric furnace electrode having a hollow graphite body component with a central bore having a coolant supply pipe therein attached to a header assembly at one end, a hollow nipple at the other end, said coolant supply pipe utilized to create a compressive force on said electrode by tension between said header and said nipple prestressing said graphite body component.

2. The electrode of claim **1** wherein the means for prestressing said electrode comprise a spring and nut assembly on the header assembly, and a central coolant supply pipe in tension attached to the nipple.

3. The electrode of claim **1** wherein the coolant supply means comprises a pipe which has an outer diameter substantially smaller than the inner diameter of the bore of said electrode, forming a coolant return annulus between said pipe and said bore.

4. The electrode of claim **1** wherein the coolant enters the coolant supply pipe, traverses said pipe to the interior of the nipple, and returns through the coolant return annulus to the header assembly and there exits the electrode.

5. The electrode of claim **1** comprising a graphite tube having a transverse CTE of no more than 15×10^{-7} cm/cm/° C. over the range of 0° to 50° C.

6. The electrode of claim **1** wherein the means for holding the graphite component in compression comprises an assembly of flat spring washers.

7. The electrode of claim **1** wherein the inner bore of the graphite tubular component is sealed with a surface coating.

8. The electrode of claim **1** wherein the compressive force is exerted on the graphite body component through flanges on the header and nipple.

9. The electrode of claim **1** wherein the compressive force is exerted on the graphite body through threads in a socket at each end of said graphite body component.

10. The electrode of claim **1** wherein the compressive force exerted on the electrode is sufficient to overcome the gravitational force of the electrode string and result in an upward force moment of the nipple against the lower socket of said electrode and also put the upper part of the nipple in compression.

11. The electrode of claim **1** placed under 1.7×10^5 (25 PSI) of compressive force.

12. In a water-cooled tubular graphite arc furnace electrode having a central bore, the improvement comprising:

a. an electrode wall thickness having a minimum of the differential between the electrode diameter and the maximum socket base diameter;

b. a central inlet pipe having a smaller OD than the ID of said electrode functioning as a water supply and also as a prestressing member whereby said electrode is held in compression;

c. said pipe being attached to a header assembly at the upper end of the electrode;

d. said header having water outlet passage means;

e. said pipe being attached to a hollow nipple located at the lower end of the electrode, said nipple constructed of a metal selected from the group consisting of copper, ductile iron, cast iron, a ferrous alloy, titanium and Invar;

f. said pipe extending into the interior of said nipple;

g. said nipple having coolant passage means connecting with the coolant return annulus between the OD of said pipe and ID of said electrode;

h. said pipe being placed under tension between said header and said nipple, whereby said electrode is held under compressive force.

13. A water-cooled composite tubular electric arc furnace electrode having a graphite body component with a central bore, a header assembly at one end, a hollow nipple at the other end, and a structural member in tension attached to said header and said nipple prestressing said graphite by exerting a compressive force thereon, wherein said central bore serves as coolant supply means, and coolant return means comprise longitudinal passages at a distance radially outward from said central bore.

* * * * *

United States Patent [19]

Bruff et al.

[11] **Patent Number: 4,527,329**

[45] **Date of Patent: Jul. 9, 1985**

[54] PROCESS FOR THE MANUFACTURE "IN SITU" OF CARBON ELECTRODES

[75] Inventors: **William Bruff**, Vaagsbygd, Norway; **Geraldo S. de Santana**; **David G. de Oliveira**, both of Espiritio Santo, Brazil

[73] Assignees: **Carboindustrial S.A.**, Brazil; **Elkem a/s**, Norway

[21] Appl. No.: **397,574**

[22] Filed: **Jul. 12, 1982**

Related U.S. Application Data

[63] Continuation-in-part of Ser. No. 330,446, Dec. 14, 1981, abandoned, which is a continuation of Ser. No. 217,393, Dec. 15, 1980, abandoned, which is a continuation of Ser. No. 89,492, Oct. 30, 1979, abandoned.

[30] **Foreign Application Priority Data**

Oct. 31, 1978 [BR] Brazil 7807158

[51] **Int. Cl.**^{3} **H01R 43/00**

[52] **U.S. Cl.** **29/825**; 373/89

[58] **Field of Search** 29/825; 373/89, 97, 373/99; 219/137.2

[56] **References Cited**

U.S. PATENT DOCUMENTS

1,440,724	1/1923	Soderberg	373/89
1,544,151	6/1925	Helfenstein	373/99 X
2,495,148	1/1950	Tanberg	373/89 X
4,133,968	1/1979	Frolov	373/89
4,447,703	5/1984	Stol	219/137.2 X

FOREIGN PATENT DOCUMENTS

673945	1/1930	France .	
116853	1/1918	United Kingdom .	
924842	5/1963	United Kingdom	373/97
1269676	4/1972	United Kingdom .	

Primary Examiner—Mark Rosenbaum
Assistant Examiner—Carl J. Arbes
Attorney, Agent, or Firm—Lucas & Just

[57] **ABSTRACT**

A process of forming a continuous carbon electrode for use in a smelting furnace in situ is disclosed. The process consists of at least two annular members, the first annular member provides the heat for softening, and baking the electrode paste to form a solid carbon electrode and the second annular member provides the electric current for the furnace. The second annular member receives energy independent of the first annular member. The weight of the electrode is supported either by the first annular member or by a third annular member which is added between the first two annular members.

3 Claims, 2 Drawing Figures

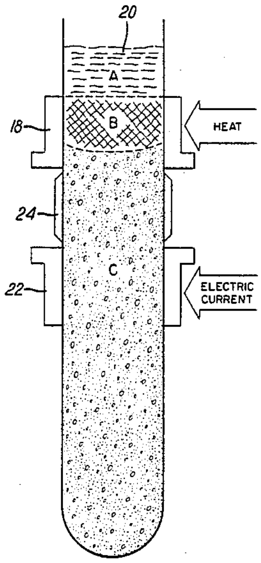

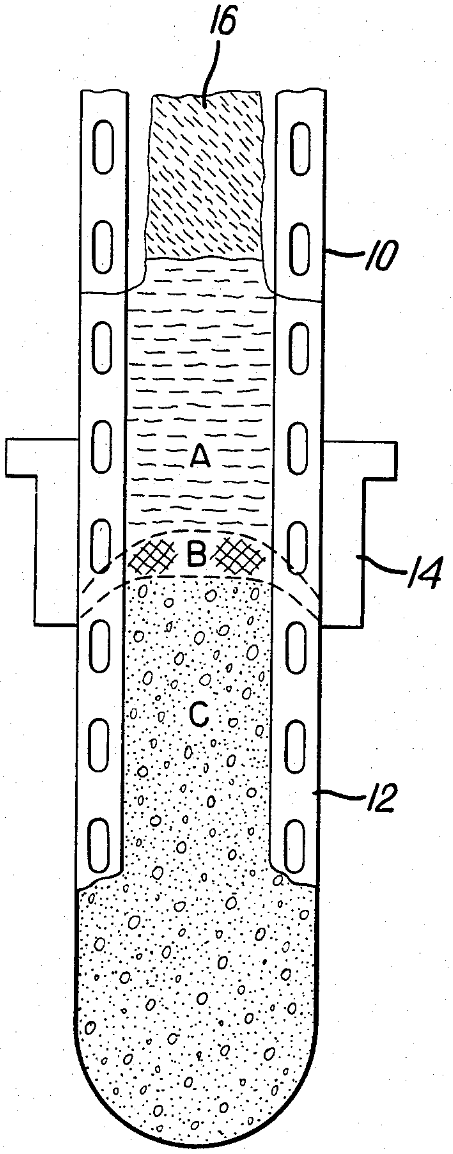

FIG. 1
PRIOR ART

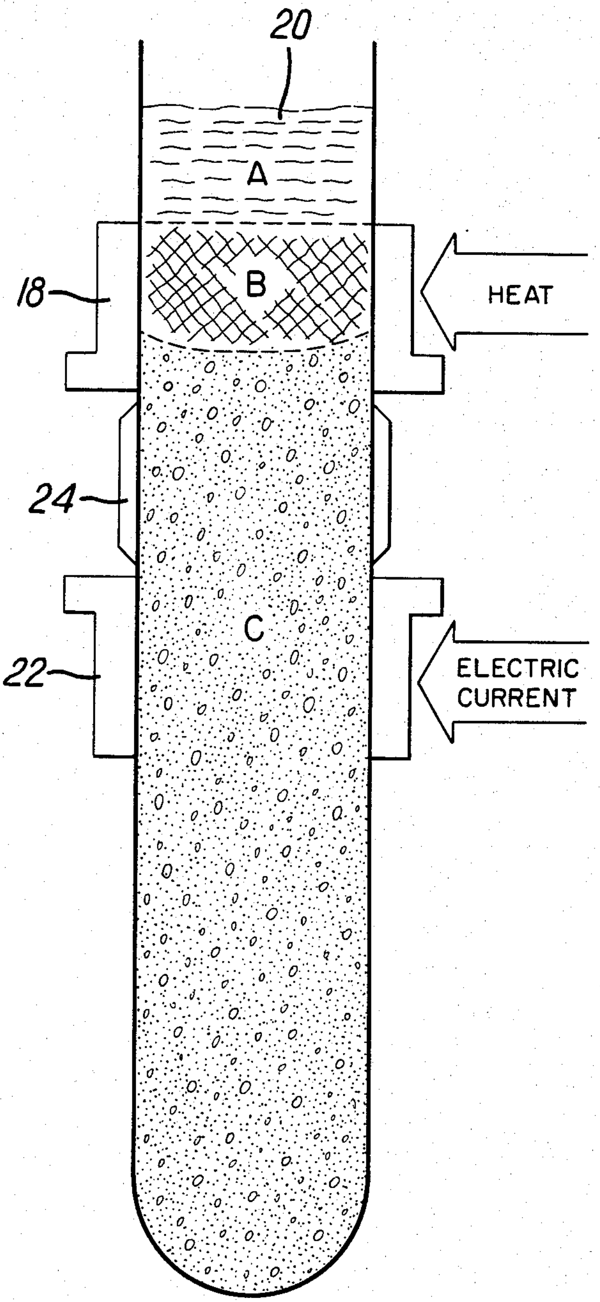

FIG. 2

PROCESS FOR THE MANUFACTURE "IN SITU" OF CARBON ELECTRODES

This application is a continuation-in-part of application Ser. No. 330,446 filed Dec. 14, 1981 and now abandoned which in turn was a continuation of application Ser. No. 217,393 filed Dec. 15, 1980 and now abandoned which in turn was a continuation of application Ser. No. 089,492 filed Oct. 30, 1979 and now abandoned.

The invention relates to an improved process for the manufacture of electrodes in situ, and more particularly to an improved process of formation of a carbon electrode in the upper parts of electro-metallurgical furnaces.

The Soederberg process for formation of carbon electrodes in situ in electric furnaces is very well known. In general, the Soederberg process overcomes the need for manufacture of electrodes in a separate manufacturing facility by enabling the production of the electrode in situ from an electrode paste of carbon, for example, a mixture of anthracite and a hydrocarbon binder such as pitch and/or tar.

The Soederberg electrodes in electrothermic furnaces are typically equipped with a consumable casing which follows the downward movement of the electrode into the charge. Other Soederberg electrodes are conventionally equipped with a fixed casing through which a formed carbon electrode is supplied. In either case, the electric current is supplied to the entire casing or mantle of the electrode both for baking the electrode paste as it progresses downward toward the charge and for supplying operating current to the electrode.

The Soederberg process is a preferred process for forming furnace electrodes. Unfortunately, the suspension and advance of the conventional electrode requires complicated and expensive suspension design and apparatus for lowering the electrode as well as an elaborate cooling system, all of which must be included within a restricted space of the furnace.

U.S. Pat. No. 1,544,151 teaches an apparatus for forming electrodes by molding a separate electrode section directly above and joined to the operating electrode. Each successive electrode portion is manufactured in place by tamping the electrode material into a mold disposed above the operating electrode, heating the new material to form a new electrode portion which is separable from but affixed to the lower electrode and then allowing the newly baked electrode portion to cool in order to separate the electrode from the walls of the mold. The process taught by this reference is not a truly continuous process in that each unit of the electrode is formed separately as a unit to be added as a section to the lower electrode. The electrode itself is thus not a truly continuous electrode and differs from previously known electrode design only in the location of the electrode-forming mold, since the teaching of this reference is that the units to be added are joined by means of pieces of metal or graphite in precisely the same way as the conventional pre-baked carbon electrodes are joined.

An object of this invention is an improved process which will permit the use of a Soederberg type electrode is submerged arc furnaces as well as in arc furnaces. Another object is to make possible the use of a continuous electrode-forming process in systems especially where the product might be contaminated by the material of the casing.

In accordance with the invention a continuous electrode is obtained by the process of softening and baking an electrode paste in a relatively small first zone adjacent to a first annular member which provides for controllable heating and baking of the electrode paste. It has been found that an electrode formed as disclosed herein emerges from the annular member without requiring a casing or surrounding shell for mechanical support or for electrical conduction. The baked electrode advances from the first annular member to a separate holder for supplying electric current to the electrode in a second zone thereof.

Other objectives and advantages of the method and electrode in accordance with the invention will be appreciated from the following description of the drawings herein:

FIG. **1** is a schematic longitudinal section of an electrode of the conventional Soederberg process; and

FIG. **2** is a schematic view of a longitudinal section of an electrode in accordance with the present invention.

Referring now to FIG. **1**, it can be seen that a conventional Soederberg electrode includes a casing **10** having a plurality of ribs **12** disposed along its internal periphery. An electrode holder **14** for supplying current to the electrode surrounds the casing **10**.

Electrode paste **16** which is, for example, a conventional mixture of calcined anthracite and pitch and/or tar is supplied within the casing **10**. As the electrode is lowered, the mixture **16** approaches the zone A which is typically situated just above the holder **14**. Conventional electrode pastes soften at approximately 80° C. and when the temperature reaches the range of from about 400° C. to about 600° C., the volatile substances in the paste are expelled and the paste is baked into a final form. Thus, as the temperature of the paste in the casing reaches the neighborhood of approximately 80° C., the softened paste slides downward to fill the casing and is subjected in the area illustrated as zone B to increasing temperatures of approximately 400° C. to 600° C. where it is baked. At this point, there is thus formed a solid carbon electrode C encased at the periphery by the casing **10** which will also enter the furnace interior where it will be consumed. In this known continuous process, new casing will be required to be added at the upper end to in turn be lowered and consumed.

FIG. **2** illustrates in schematic form both the process of making an electrode and an electrode according to the invention. Electrode paste **20**, which suitably may be a known mixture of calcined anthracite and pitch and/or tar is fed into the upper opening of annular member **18**. Controllable heat is applied through member **18** to the paste mixture **20** therein. As in the previous described process, the softening of the paste takes place at approximately 80° C. and the baking in the range of approximately 400° C. to 600° C., which temperature is provided in any conventional manner to the member **18**. For best results, the heating for the softening and baking of the electrode paste is independent of the energy utilized for the melting process in the electric furnace.

It will be appreciated by those skilled in the art that any known controllable heating means are suitable for the purpose of providing heat to the member **18**. The means can include electric resistance heating, induction heating, open or closed flame heating, or a heat exchanging apparatus, each of which may be easily adjusted.

The heat is adjusted so that by the time that the paste has traveled through zone B, the paste has been heated to temperatures of about 1000° C. and thereby baked sufficiently such that the lower portion of electrode C is substantial enough to be fed to and held by separate holder **22** without requiring the surrounding casing taught in the prior art, which casing would also normally carry the operating electric current for the electro-thermal furnace operation.

It will be appreciated that the member **18** may conveniently be made sufficiently strong itself to enable it to carry at least a part of the electrode weight. However, the suspension of the electrode could also be effected by a separate holder **24** shown disposed between members **18** and **22**. The electrode may be utilized in horizontal or inclined positions as well as the typical vertical position.

It will be further appreciated that the process in accordance with the invention will not preclude the use of, if desired, a simplified casing in which the ribs **12** of casing **10** are eliminated entirely in order to reduce manufacturing costs of such casings.

It will also be appreciated that feeding of the electrode paste may be accomplished by well known mechanical means (not shown) or by tamping means (also not shown).

It will be understood that the claims are intended to cover all changes and modifications of the embodiment herein shown for the purpose of illustration which do not depart from the scope and spirit of the invention.

What is claimed is:

1. A process for continuously forming in situ a carbon electrode in at least one annular member and a spaced separate electrode holder for use in a smelting furnace comprising the steps of:

(a) supplying electrode paste consisting essentially of carbonaceous material and a hydrocarbon binder to said annular member;

(b) supplying heat to said electrode paste in said annular holder and controlling the supply of heat to said electrode paste in said annular member, independently of the heat of said smelting furnace, said heat being sufficient for softening and heating the electrode paste to a temperature of at least about 400° C. to bake the electrode paste and form a solid unitary carbon electrode while said electrode paste is within said annular member; and

(c) advancing the solid unitary electrode from said annular member to said holder, said spaced separate holder being operative for suspending the electrode and for receiving electrical current and supplying the current to the electrode independently of energy supplied to the annular member, whereby the solid electrode is a continuous unitary mass between said annular member and said separate holder.

2. The process of claim **1** which includes the step of supplying heat to said electrode paste in said annular holder independently of the energy utilized for the melting process in said electric smelting furnace.

3. The process of claim **1** which includes the steps of heating the annular member and transferring the heat for softening and baking the electrode paste from said annular member to the electrode paste by means of physical contact between the annular member and electrode paste.

* * * * *

United States Patent [19]
Orrling

[11] **Patent Number: 4,696,014**
[45] **Date of Patent: Sep. 22, 1987**

[54] **SELF-BAKING ELECTRODES**

[75] Inventor: **Bengt Orrling**, Linköping, Sweden

[73] Assignee: **ASEA Aktiebolag**, Västerås, Sweden

[21] Appl. No.: **909,924**

[22] Filed: **Sep. 22, 1986**

[30] **Foreign Application Priority Data**

Sep. 25, 1985 [SE] Sweden 8504425

[51] **Int. Cl.**^{4} **H05B 7/107**
[52] **U.S. Cl.** **373/89**
[58] **Field of Search** 373/89, 97; 204/280

[56] **References Cited**

U.S. PATENT DOCUMENTS

1,640,735	8/1927	Soderberg	373/89
4,527,329	7/1985	Bruff et al.	373/89

Primary Examiner—Roy N. Envall, Jr.
Attorney, Agent, or Firm—Watson, Cole, Grindle & Watson

[57] **ABSTRACT**

In the production of an electrode for an arc furnace from a hardenable electrode paste and in which the arc current is fed to the electrode via a current supply unit, an electrode heater is arranged, in the direction of feeding down of the electrode into the furnace upstream of the current supply unit, said electrode heater supplying thermal energy to the electrode paste for the purpose of baking the latter, the formation of the electrode from the paste taking place in a casing which is not consumed in the arcing.

9 Claims, 3 Drawing Figures

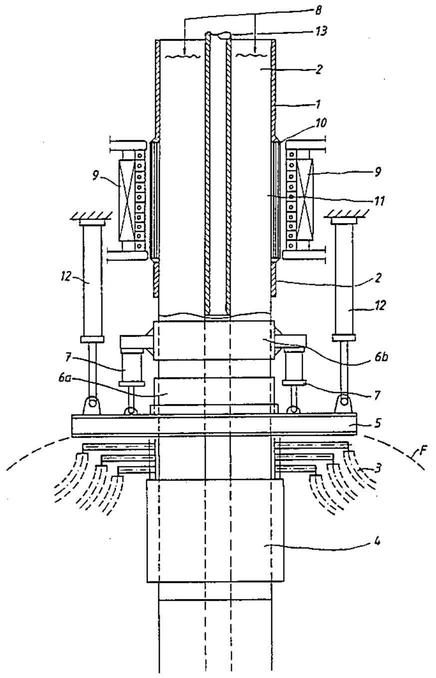

Fig.1

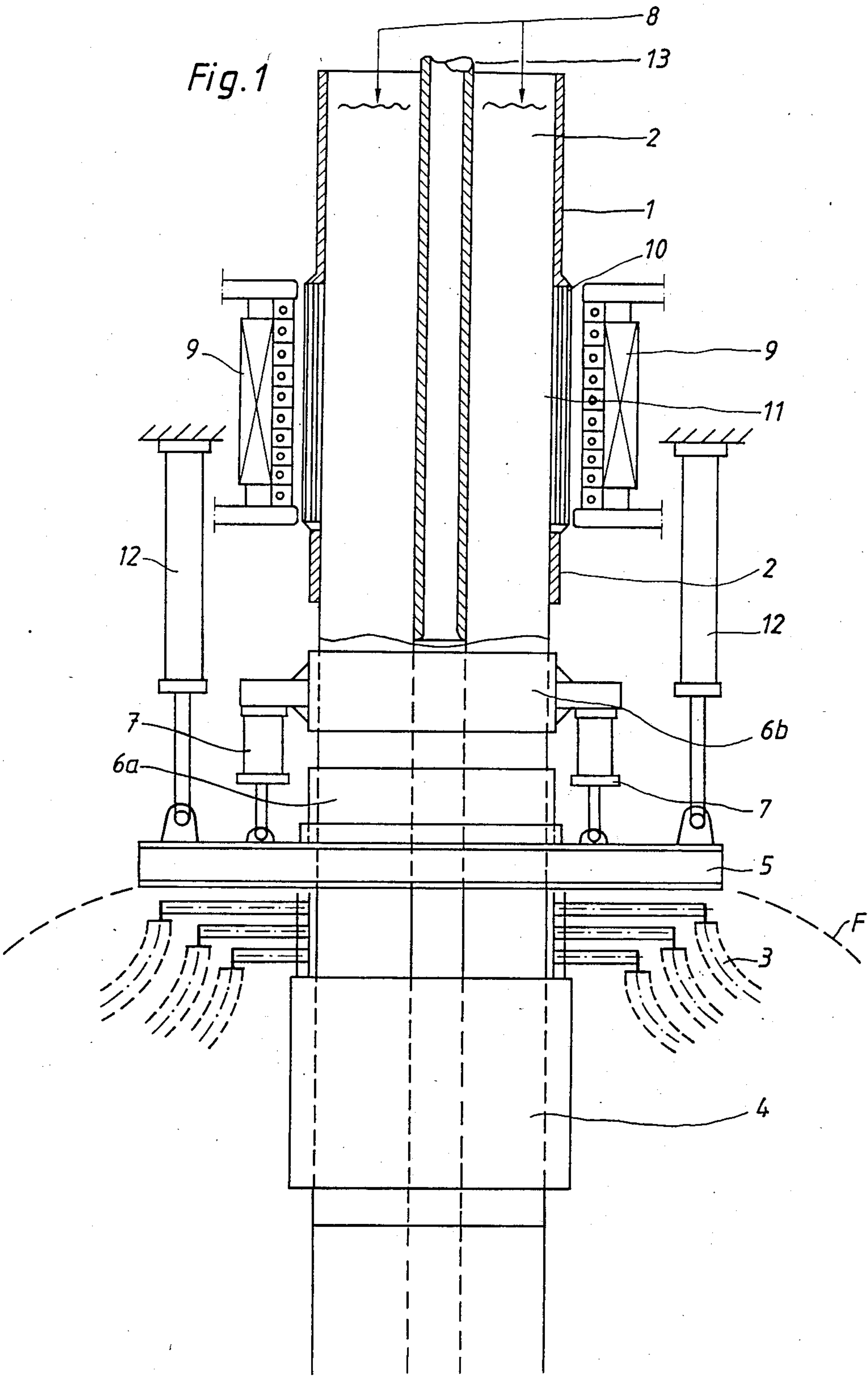

Fig. 2

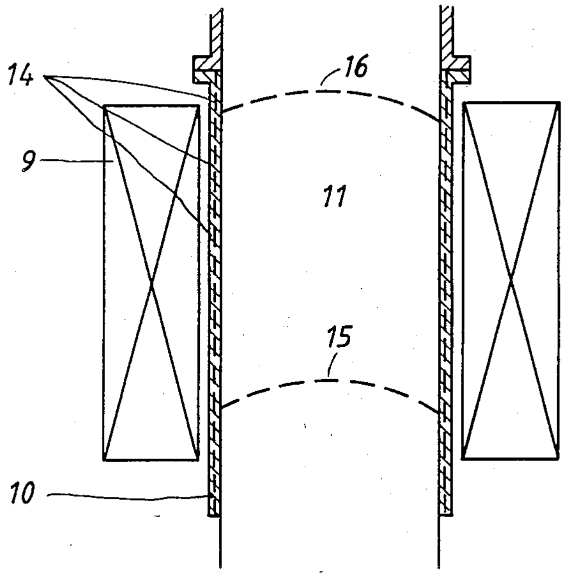

Fig. 3

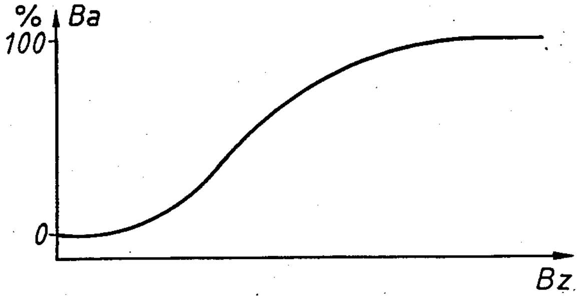

SELF-BAKING ELECTRODES

TECHNICAL FIELD

The present invention relates to apparatus for producing a consumable electrode, for use in a melting or reduction arc furnace, from an electrode paste contained in a metallic casing and for supplying electrical current to the electrode by means of at least one current supply unit.

BACKGROUND ART

A self-baking electrode (a so-called Söderberg electrode) is primarily used in the production of ferroalloys in reduction furnaces. Externally the electrode consists of a thin cylindrical casing of iron or steel having a thickness of from 0.2 to 3 mm, depending on the electrode diameter. The casing is constructed by successively welding thin iron or steel pipes, each internally reinforced with ribs and/or sheet metal fins, onto the existing casing at a rate to match that at which the electrode is consumed. An electrode paste is then filled into the pipes from above. The electrode paste often consists of a compound of one or more of anthacite, petroleum coke, graphite, coal pitch, coal tar and wood tar. Further down the electrode, electric current is fed to the electrode via so-called contact shoes. The baking of the electrode paste takes place in a zone adjacent to the contact shoes. A bakes electrode is a good conductor of electricity whereas a non-baked electrode is a poor conductor of electricity. When the electrical current passes through the electrode paste, the paste is heated by the release of resistance heat. The paste softens and melts at a temperature of 50°-100° C., depending on its composition. At 350° C. the baking process starts, and gases and volatile components start escaping. The baking process may continue up to a temperature of about 800° C., at which temperature the last of the volatile substances present in the paste are driven off. The electrode paste has poor conductivity prior to the baking. Therefore, the casing and the internal reinforcement to a large extent have to carry the electric current in the zone immediately below the contact shoes, where the baking process has not yet been completed.

The baking of the electrode paste when using a Soderberg electrode, as described above, is complicated and difficult to control. When the consumption rate of the electrode exceeds that of the baking speed, a so-called green breakage may occur, whereby unbaked electrode paste slides out of the casing and drops into the furnace space. Such an event contaminates material in the furnace, pollutes the environment and is hazardous to personnel operating the furnace.

Another disadvantage with this method of electrode manufacture is that it cannot be automated in a simple manner and that iron or steel sheathed electrodes cannot be used in the manufacture of, for example, silicon metal, in which iron is a harmful impurity. Such silicon metal is used as raw material in the manufacture of silicones, in semiconductor manufacture and for alloying aluminum.

One object of the present invention is to provide a solution to the above-mentioned problems and other problems associated therewith.

SUMMARY OF THE INVENTION

The invention is characterized in that an inductive furnace or heater is arranged, in the direction of feeding of the electrode, upstream of the current supply units or contact shoes, said furnace or heater surrounding the electrode and being used to supply thermal energy to the electrode with a view to accelerating the baking process. Thus, according to the invention a separate heating means is used for heating and baking the electrode paste.

There are several advantages which result from the use of the invention and among these may be mentioned

The baking speed can be better controlled and hence the risk of green breakage can be avoided. This permits the safe use of a self-baking electrode in applications in which it has previously been necessary to use prebaked electrodes (carbon or graphite electrodes).

The reinforced iron or steel casing can be dispensed with, and the electrode manufacture can therefore be automated in a simpler manner.

The electrode can be used in, for example, the manufacture of silicon metal since no iron need be present in the electrode.

Constructive advantages are gained with respect to the design and location of the contact shoes. The contact shoes can be located above the roof of the furnace when the current losses are limited.

A hollow electrode can be manufactured in a simple manner.

The electrode can be formed from a cylindrical metallic casing, which in the zone where the electrode heating occurs changes into a ceramic casing and then again, below the heater, changes back into a portion provided with a metallic casing. The electrode is normally supported by electrode holders which are located below the electrode heater and which engage the emerging baked, unsheathed electrode, as will be described below with reference to the accompanying drawings. The feeding of the electrode can take place, for example, by means of special feeding cylinders. When the feeding of the electrode is performed, the casing and the heater are in locked position and the electrode paste sinks down into the casing. Electrode paste can be automatically refilled concurrently with the advance of the electrode. When electrode control is performed, the casing and the electrode heater move with the electrode, so that no relative movement arises between the electrode paste and the casing. The electrode control can be performed, for example, by means of electrode control cylinders.

BRIEF DESCRIPTION OF THE DRAWINGS

The invention will now be exemplified, in greater detail, by way of example, with reference to the accompanying drawings, wherein:

FIG. 1 shows a hollow electrode with an inductive electrode heater,

FIG. 2 shows a detailed view of the induction electrode heater, and

FIG. 3 shows the relationship between degree of baking across the baking zone.

DESCRIPTION OF PREFERRED EMBODIMENT

FIG. 1 shows a self-baking electrode **2** provided with a sheet iron or steel casing **1**. The electrode **2** is intended to be fed down into a furnace (shown dotted at F) as the electrode is consumed in the furnace. Electric current (from current supply leads **3**) is fed into the electrode **2** at a contact shoe **4**, and the electrode **2** is fed down through a roof **5** of the furnace F.

The electrode 2 (and in practice there would be several electrodes), which is supplied with direct or alternating current (single-phase or multi-phase), is supported by electrode holders *6a*, *6b*. The feeding down of the electrode 2 can arise by allowing one holder *6a* to temporarily release its grip while the other holder *6b* is lowered by means of electrode feeding cylinders 7. The one holder *6a* can then be reclamped while the other holder *6b* is raised again using the cylinders 7.

The electrode column is supported by the electrode holders *6a*, *6b* which are located below an electrode heater 9. The feeding forward takes place by means of the electrode feeding cylinders 7. When a feeding down of the electrode 2 occurs, the casing 1 and the heater 9 are in a locked position and electrode paste, which is filled into the upper end of the casing 1 at 8, sinks further down into the casing 1. The electrode paste can be automatically added concurrently with the downward advance of the electrode 2. When electrode control is performed, the casing 1 and the heater 9 (in the illustrated case an inductive furnace) move with the electrode column, that is, no relative movement takes place between the paste and the casing 1. Electrode control can be performed by means of electrode control cylinders shown at 12.

The induction furnace or other electrode heater 9 is arranged around the electrode 2. On a level with the heater 9, the casing 1 is made of a non-ferromagnetic (e.g. ceramic) material 10. The non-ferromagnetic region of the casing 1 can also be constructed as a cement or concrete mold, reinforced with wire, for example titanium wire. The paste which will form the electrode 2 is baked in the induction furnace 9 in a baking zone 11. At 15 (see FIG. 2), the electrode paste has been baked to form a coherent self-supporting electrode 2.

In many cases, the electrode 2 will be provided with a central, refractory pipe 13 of a ceramic or stainless steel which can serve as a charging passage and a mandrel for making the passage. The pipe 13 should extend downwards beyond the baking zone 11. When the electrode 2 is fed down, the electrode heater 9 accompanies it, and no relative movement takes place between the heater 9 and the electrode holders *6a*, *6b*. In the vicinity of the electrode holders *6a*, *6b* the electrode 2 is not provided with a casing.

A central passage in the electrode 2 can be formed with the aid of the pipe 13 or by means of a special mandrel made of a refractory non-magnetic material.

From FIG. 2 it can be seen that the baking of the electrode paste takes place in a casing 10 which is not consumed, between the lines 16 and 15. In this way a self-supporting electrode is created below the line 15 which need not thereafter be encased.

The risk of green breakage is eliminated by the arrangement just described since the electrode 2 is already baked to a solid form before it encounters the contact shoe 4. The electrode may, of course, be provided with the central passage or could be of a non-hollow kind.

For controlling the baking speed of the paste in the construction of a self-baking electrode for an arc furnace, one or more of the properties of the electrode can be measured, such as resistivity, temperature, thermal conduction, strength or density. From the measured value(s), a control signal can be obtained for controlling the energisation of the heater 9 and/or controlling the rate of feeding down of the electrode. The measured properties change during the baking process, and can thus be used for reliable control.

By measuring one or a few of the above properties along a generatrix Bz (see FIG. 3) through the baking zone or immediately below this zone, the desired degree of baking (Ba) of the electrode paste can be obtained. Suitable sensors or transducers for this purpose may be capacitance or ultrasonic transducers (e.g. located at 14 in FIG. 2), but also other types of sensors may be used. The signal obtained can be used, for indicating and measuring purposes, as well as for controlling the feeding of the electrode. In this way, the baking speed can be controlled so as to ensure complete baking of the electrode within the heater 9. It will also be possible to control and coordinate the various functions, that is, electrode feeding, baking and addition of fresh electrode paste. This can possibly be controlled by means of a computer.

The embodiment illustrated can be varied in many ways within the scope of the following claims.

I claim:

1. Apparatus for producing a consumable electrode, for use in a melting or reduction are furnace, from an electrode paste contained in a metallic casing and for supplying electrical current to the electrode by means of at least one current supply unit,

the improvement wherein

an electrode heater is arranged in the direction of advance of the electrode into the furnace upstream of the current supply unit, said electrode heater being arranged to be moved in said direction of advance with the electrode when the electrode is advanced into the arc furnace, said electrode heater surrounding the electrode paste and being adapted to supply thermal energy to the electrode paste to bake it into a selfcoherent form before it reaches the current supply unit.

2. Apparatus according to claim 1, in which the electrode paste is enclosed within a casing of a nonferromagnetic material or within a cover of stainles steel or a combination of said material and said steel.

3. Apparatus according to claim 2, in which the nonferromagnetic material is a ceramic material.

4. Apparatus according to claim 2, in which the nonferromagnetic material is stainless steel.

5. Apparatus according to claim 1, in which a passage is formed in the electrode by means of a tubular mandrel.

6. Apparatus according to claim 5, in which the mandrel is a tube of refractory and non-magnetic material.

7. Apparatus according to claim 1, in which at least one electrode feeding cylinder is arranged to support an electrode holder for advancing the electofed into the arc furnace.

8. Apparatus according to claim 1, in which a pipe of non-ferromagnetic material is located centrally in the electrode paste, said pipe extending through the heating zone of the electrode heater and serving both as a material charging passage to the furnace and as a mandrel to create a passage in the electrode after hardening of the paste.

9. Apparatus according to claim 1, in which the arc furnace has at least one electrode supplied with direct or alternating current (single-phase or multi-phase) via a respective current supply unit.

* * * * *

United States Patent [19]
Kvivik

[11] **Patent Number: 4,722,684**
[45] **Date of Patent: Feb. 2, 1988**

[54] ARRANGEMENT FOR SUSPENSION OF A BAKING FURNACE FOR ELECTRODES

[75] Inventor: **Henrik M. Kvivik**, Kristiansand, Norway

[73] Assignee: **Elkem a/s**, Oslo, Norway

[21] Appl. No.: **885,234**

[22] Filed: **Jul. 14, 1986**

[30] **Foreign Application Priority Data**

Aug. 22, 1985 [NO] Norway 853319

[51] **Int. Cl.**⁴ **F21J 3/00**
[52] **U.S. Cl.** **432/225**; 264/105; 373/89; 432/229
[58] **Field of Search** 432/225, 229, 241, 123; 373/89; 264/104, 105; 228/25

[56] **References Cited**

U.S. PATENT DOCUMENTS

1,751,177	3/1930	Sem et al.	373/89
2,193,434	3/1940	Sem	373/89 X
3,131,917	5/1964	Gessner et al.	432/229 X
3,524,004	8/1970	Van Nostran et al.	373/89
4,612,151	9/1986	Bruff et al.	373/89 X

Primary Examiner—Edward G. Favors
Attorney, Agent, or Firm—Lucas & Just

[57] ABSTRACT

The present invention relates to an arrangement for suspension of a baking furnace (19) for continuous production of carbon electrodes in direct connection with the smelting furnace (2) wherein the electrodes are consumed. The baking furnace is suspended from a baking furnace frame (15) by means of at least three rails (16), said rails (16) being connected to the baking furnace frame (15) at their upper ends by means of first universal joints (17) and the baking furnace (19) being connected to the rails (16) by means of second universal joints (25) and wherein the baking furnace at its upper ends are equipped with means (21) for guiding the electrode into the baking furnace (19). The rails (16) are preferably threaded spindles and the baking furnace being connected to the spindles by means of nuts (20) having spherical bearings (25). At the lower end of the baking furnace there are preferably arranged at least three guide wheels (23) which via brackets (24) are affixed to the baking furnace (1).

8 Claims, 4 Drawing Figures

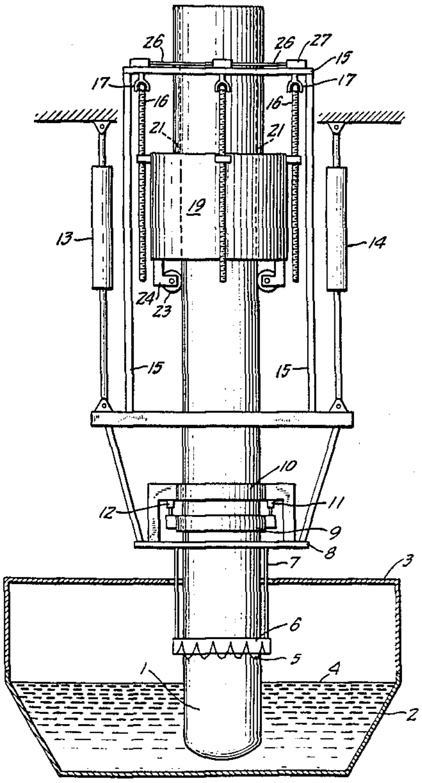

FIG. 1.

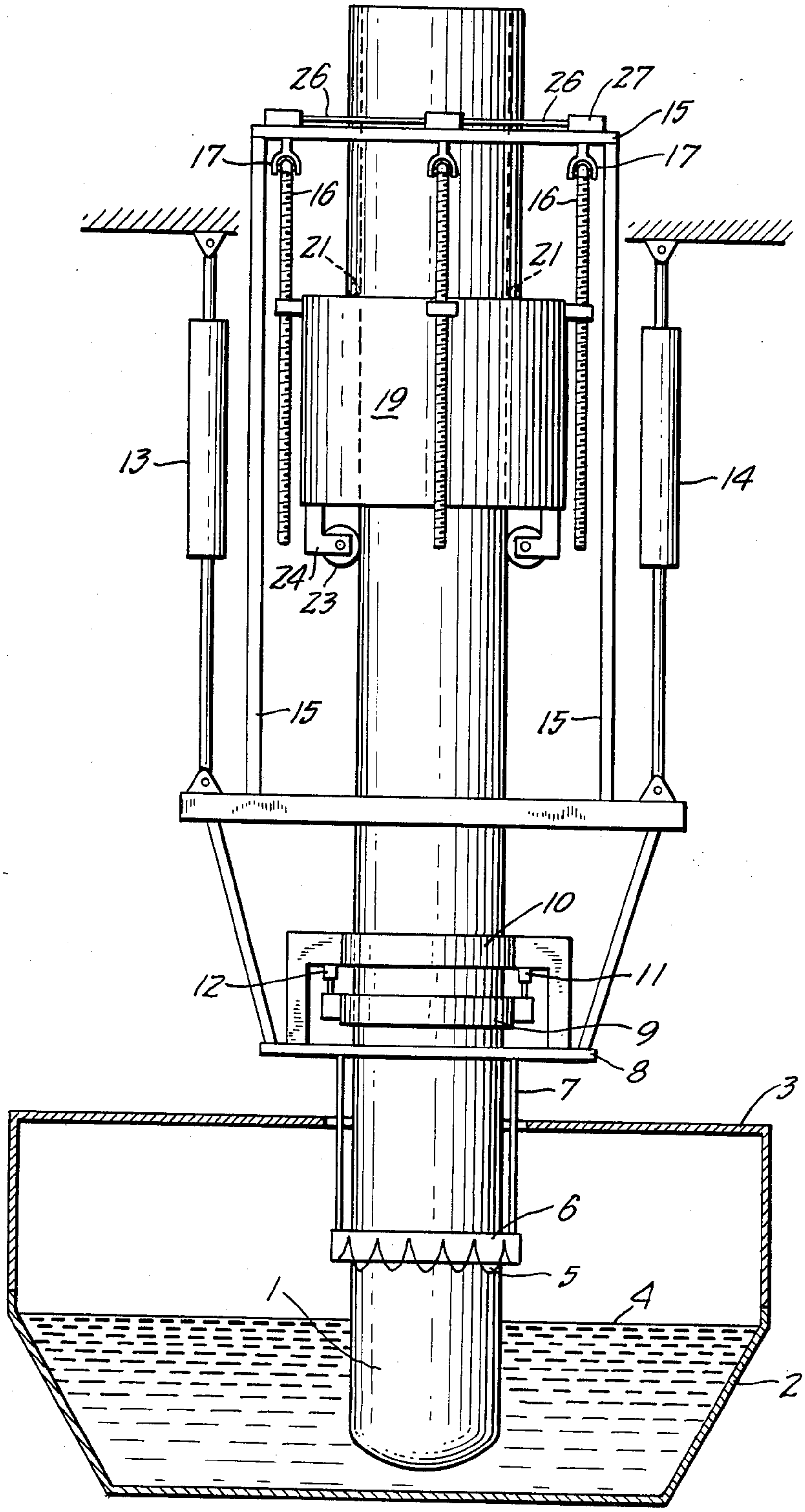

FIG. 2.

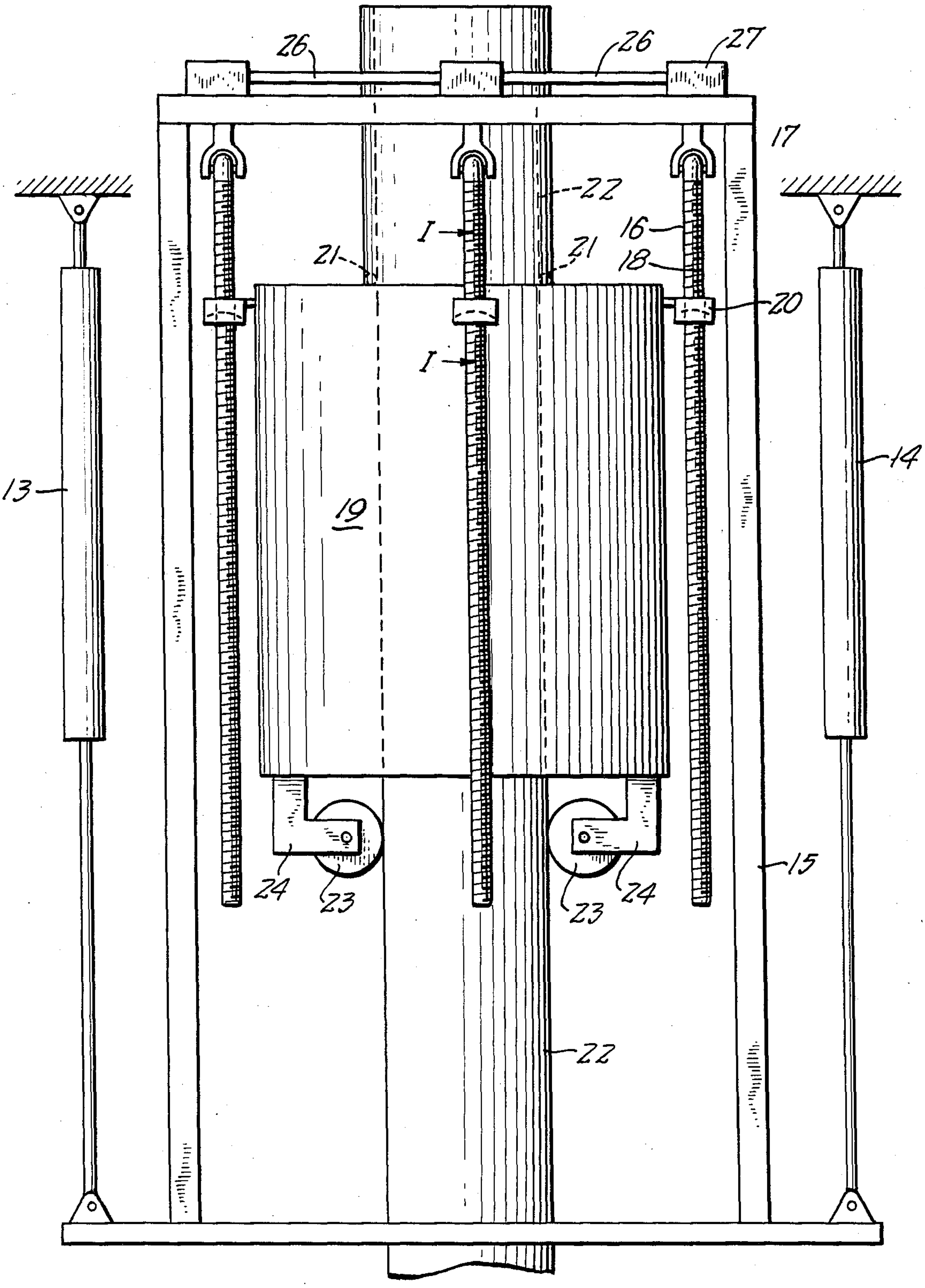

FIG. 3.

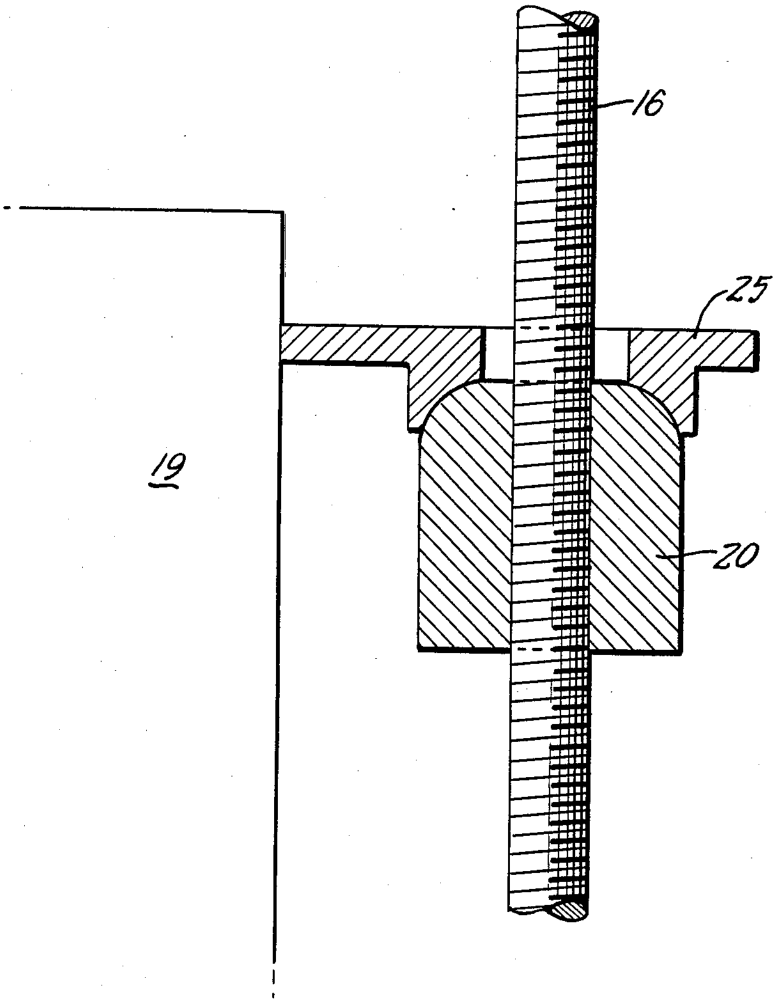

FIG. 4.

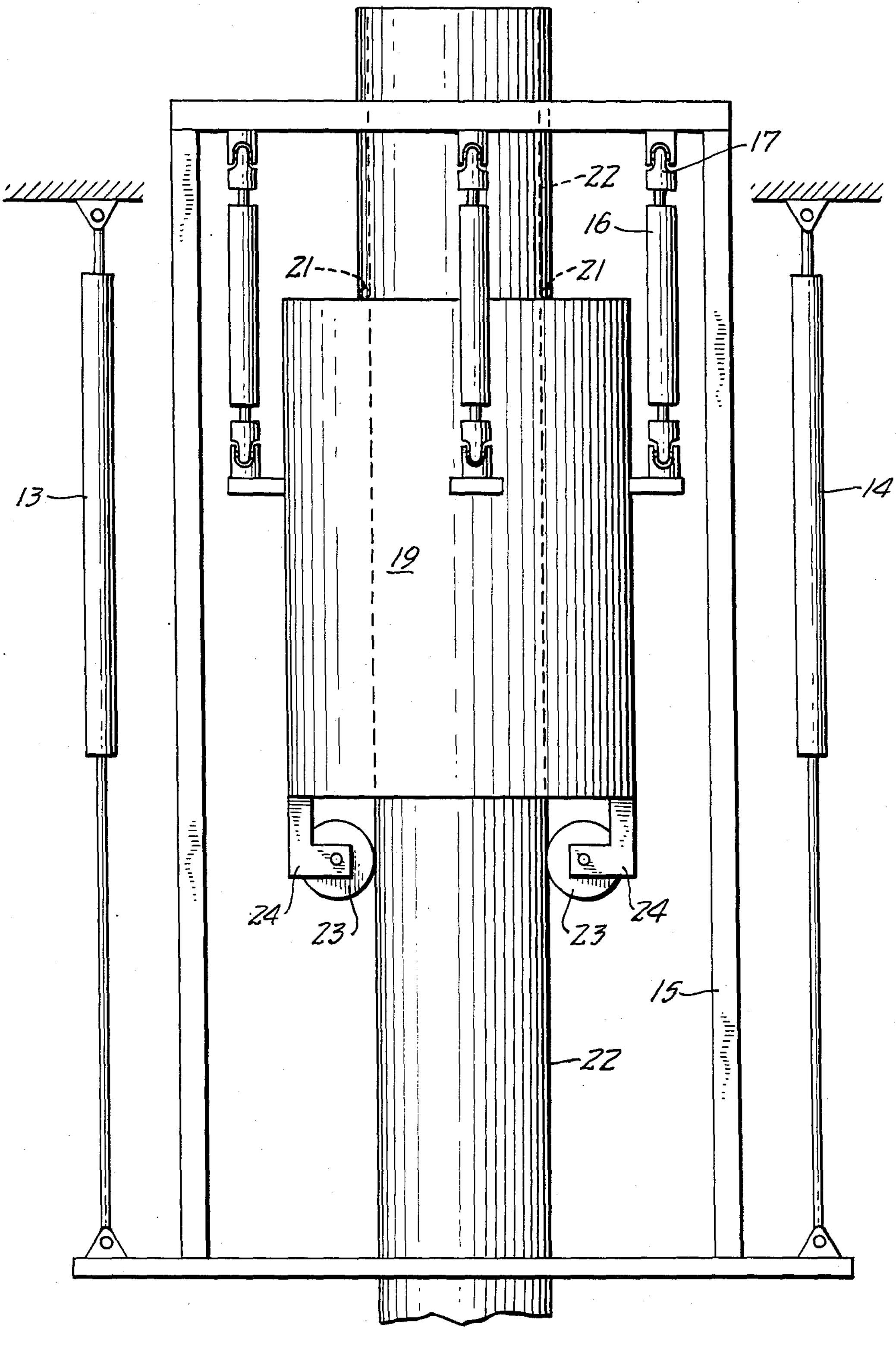

ARRANGEMENT FOR SUSPENSION OF A BAKING FURNACE FOR ELECTRODES

BACKGROUND OF THE INVENTION

The present invention relates to an arrangement for suspension of an electrode baking furnace about a carbon electrode which is produced in direct connection with the furnace wherein the electrode is consumed.

It is known to produce continuous carbon electrodes in direct connection with the furnace wherein they are consumed by supplying heat energy to unbaked electrode paste comprising a particulate carbon material and a carbonaceous binder.

The baking furnace is arranged above the level where electric operating current is conducted to the electrode. Green electrode paste is charged into a steel casing which is removed when the electrode has passed through the baking furnace. In this way the product which is produced in the smelting furnace is not contaminated by the iron of the steel casing. As the electrode is consumed new sections of steel casing are put on the top of the electrode and additional green electrode paste is charged into the casing.

In order to produce a homogeneous electrode it is important that the bakihg furnace moves continuously or substantially continuously relative to the electrode with a velocity which corresponds to a preset baking speed for the electrode.

During the baking, the electrode paste becomes more or less liquid, whereafter it is burned to a solid carbon electrode. As the baking temperature is between 700° and 1300° C., the steel casing will become very soft in the baking zone inside the baking furnace. The electrode including the casing thereiore has an extremely low strength when it is inside the baking furnace. In order to produce a continuous electrode, the electrode therefore has to be guided through the baking furnace.

As the electrode has to pass through another two fixed points, namely the current clamps for conducting electric operating current to the electrode and the electrode holding and slipping equipment, any deviation from straight-lined electrode will result in clamping or sticking of the electrode. The electrode will thus either break at a point between the three fixed points which it runs through or it will be impossible to slip the electrode through the electrode holder.

It is further important that the electrode during the baking process is kept centrally in the baking furnace in order to obtain equal heating conditions about the periphery of the electrode.

It is therefore an object of the present invention to provide a suspension device for the baking furnace which makes it unnecessary to guide the electrode through three fixed points, but which at the same time keeps the electrode centrally in the baking furnace. By use of the present invention it has further been shown that any deviation from a straight-lined electrode is automatically compensated.

SUMMARY OF THE INVENTION

Accordingly the present invention relates to an arrangement for suspension of a baking furnace for continuous production of carbon electrodes in direct connection with the smelting furnace wherein the electrodes are consumed. The baking furnace is suspending from a baking furnace frame by means of at least three rails, said rails being connected to the baking furnace frame by means of first spherical connections and to the baking furnace by means of second spherical connections. The electrode is kept centrally in the baking furnace by guiding means, at least in the upper part of the baking furnace.

Preferably, the rails are threaded spindles or hydraulic cylinders, whereby the baking furnace can be moved continuously or substantially continuously relative to the electrode at a speed equal to the preferred baking speed of the electrode.

According to a preferred embodiment of the present invention three guide wheels for the electrode are arranged at the lower end of the baking furnace for guiding the electrode through the lower end of the baking furnace.

When spindles are used as rails, the spindles are connected to the baking furnace by means of nuts where the nuts via spherical bearings are affixed to the baking furnace. In order to move the baking furnace up or down the spindles are interconnected by axels to a common drive unit, so that the three spindles are rotated at the same time and at the same speed.

When hydraulic cylinders are used as rails, the movement of the pistons of the cylinders is interconnected in order to move the three pistons at the same time and at the same speed.

Further embodiments of the present invention will be evident from the claims.

The arrangement according to the present invention will now be further described in connection with the drawings which shows preierred embodiments of the present invention.

FIG. **1** is a schematic view of an electrode in an electric furnace showing the arrangement for suspendion of the baking furnace according to the present invention;

FIG. **2** is an enlarged view of the upper part of FIG. **1**, showing the baking furnace and the arrangement for suspension of the baking furnace;

FIG. **3** is vertical view taken along line **1**—**1** in FIG. **2**, and;

FIG. **4** is schematic view similar to FIG. **2** showing another embodiment of the present invention.

DETAILED DESCRIPTION

On FIG. **1** there is shown an electrode **1** in an electric smelting furnace **2**. The smelting furnace has a smoke hood or roof **3** and the level of charge in the furnace is indicated by reference numeral **4**.

Conventional current clamps for conduction of electric operating current to the furnace are schematically shown by reference numeral **5**. The current clamps **5** are pressed against the surface of the electrode by means of a pressure ring **6**. The current clamps **5** and the pressure ring **6** have internal channels for circulation of a cooling fluid (not shown). The current clamps **5** are via rods **7** suspended from an electrode frame **8**.

On the electrode frame **8**, there is arranged two conventional holding and slipping rings **9**, **10** for the electrode **1**. The lower holding and slipping ring can be moved vertically by means of hydraulic or pneumatic cylinders **11** and **12**.

The electrode frame **8** is in conventional way suspended in the furnace building by means of hydraulic electrode regulating cylinders **13** and **14**. On the electrode frame **8**, there is arranged a baking furnace frame **15**. From the top of the baking furnace frame **15** three rails **16** are suspended. The rails **16** are spherically suspended from the frame **15** by means of universal joints such as ball bearings or cardan joints **17**.

In the embodiment shown on FIG. **2**, the rails **16** are in the form of spindles with threads **18**. A baking furnace **19** for baking of the electrode is connected to the spindles **16** by means of nuts **20**.

As shown on FIG. **3**, the nuts **20** are connected to the baking furnace by spherical bearings **25**. In order to move the baking furnace **19** up or down relative to the electrode, the spindles **16** are interconnected by axels **26** to a common drive unit **27** whereby the spindles **16** can be rotated at the same time and at the same speed.

The baking furnace **19** is in its upper end equipped with a guide ring **21** made from iron rod or the like. The inner diameter of the ring **21** is equal to or somewhat larger than the diameter of the electrode casing **22**. The guide ring **21** is intended to guide the electrode through the baking furnace **19**.

Below the baking furnace **19** there are preierably arranged guide wheels **23** which via brackets **24** are affixed to the baking furnace **19**. The guide wheels **23** are intended to guide the baked electrode.

On FIG. **4** there is shown another embodiment of the present invention where the rails **16** are in the form of hydraulic cylinders **16**. The lower end of the cylinders **16** are connected to the baking furnace by means of universal joints such as ball connection or cardan joints. In order to obtain a continuous or substantially continuous movement of the baking furnace the supply of hydraulic fluid to the cylinders **16** are interconnected.

The baking furnace **19** is equipped with means for supply of heat energy, such as oil or gas burners or electric heating elements (not shown). As the electrode is consumed in the smelting furnace, it is slipped down through the current clamps by operating the holding- and slipping ring **9, 10**. The movement of the baking furnace **19** is preferably interconnected with the electrode slipping equipment in such a way that when the electrode is slipped a certain increment through the holding and slipping rings **9, 10** the baking furnace **15** will automatically be moved an equal distance downwards. In this way the position of the baking furnace is kept in the same position relative to the baking zone in the electrode.

As the baking furnace according to the present invention is suspended in rails which are connected to the baking furnace frame and to the baking furnace by universal joints and the electrode is guided at least in the upper part of the baking furnace, a deviation from a straight-lined electrode will imply that the baking furnace is automatically moved radially outwards from the center line of the electrode while the electrode still will be centrally situated in the baking furnace. It is thereby avoided that deviations irom a straight-lined electrode will clamp the electrode. It has further surprisingly been found that if a deviation from a straight-lined electrode occurs, and the baking furnace thereby moves out from the center line for a straight-lined electrode, the

electrode will soon move back to the center line for a straight-lined electrode. This means that the arrangement for suspending the baking furnace according to the present invention is self-centering.

What is claimed:

1. Arrangement for suspending a baking furnace for continuously production of carbon electrodes in direct connection with the smelting furnace wherein the electrodes are consumed, characterized in that the baking furnace (**19**) is suspended from a baking furnace frame (**15**) by means of at least three rails (**16**) said rails (**16**) being connected to the baking furnace frame (**15**) at their upper ends by means of first spherical joints (**17**) and where the baking furnace (**19**) is connected to the rails by means of second spherical joints (**25**), the baking furnace having means (**21**) at its upper end for guiding the electrode.

2. Arrangement according to claim **1**, characterized in that the rails (**16**) are threaded spindles.

3. Arrangement according to claim **2**, characterized in that the baking furnace (**19**) is connected to the spindles by means of nuts (**20**).

4. Arrangement according to claim **3**, characterized in that the nuts (**20**) is affixed to the baking furnace by means of spherical bearings (**25**).

5. Arrangement according to claim **2**, characterized in that the spindles (**16**) via axels (**26**) are connected to a common drive unit (**27**) for rotation of the spindles (**16**).

6. Arrangement according to claim **1**, characterized in that the rails (**16**) are hydraulic cylinders.

7. Arrangement for suspending a baking furnace for continuous production of carbon electrodes in direct connection with a smelting furnace wherein the electrodes are consumed characterized in that the baking furnace is suspended from a baking furnace frome by means of at least three rails, said rails being connected to the baking furnace frame. at their upper ends by means of first spherical joints and where the baking furnace is connected to the rail by means of second spherical joints the baking furnace having a guide ring for guiding the electrode in the upper part of the baking furnace, the guide ring having a diameter equal to or somewhat larger than the diameter of the electrodes.

8. Arrangement for suspending a baking furnace for continuous production of carbon electrodes in direct connection with a smelting furnace wherein the electrodes are consumed characterized in that the baking furnace is suspended from a baking furnace frame by means of at least three rails being connected to the baking furnace frame at their upper ends by means of first spherical joints and where the baking furnace is connected to the rail by means of second spherical joints the baking furnace having means at its upper end for guiding the electrode, and at the lower part of the baking furnace there are arranged at least three guide wheels for guiding the electrodes.

* * * * *

UNITED STATES PATENT AND TRADEMARK OFFICE

CERTIFICATE OF CORRECTION

PATENT NO. : 4,722,684
DATED : February 2, 1988
INVENTOR(S) : Henrik M. Kvivik

It is certified that error appears in the above-identified patent and that said Letters Patent are hereby corrected as shown below:

Column 4, line 36, change "frome" to --frame--.

Column 4, line 50, after "rails" insert --, said rails--.

Signed and Sealed this

Nineteenth Day of July, 1988

Attest:

DONALD J. QUIGG

Attesting Officer

Commissioner of Patents and Trademarks

United States Patent [19]
Radev et al.

[11] **Patent Number: 4,740,990**
[45] **Date of Patent: Apr. 26, 1988**

[54] GRAPHITE ELECTRODE WITH PROTECTIVE COATING AND METHOD FOR ITS PRODUCTION

[75] Inventors: **Rumen B. Radev; Alexander Y. Vulchev; Vasil G. Peev,** all of Sofia, Bulgaria

[73] Assignee: **NPP PO Elektrotermia,** Sofia, Bulgaria

[21] Appl. No.: **925,888**

[22] Filed: **Oct. 30, 1986**

[30] **Foreign Application Priority Data**

Nov. 27, 1985 [BG] Bulgaria 72518

[51] **Int. Cl.**^{4} **H05B 7/08**
[52] **U.S. Cl.** **373/88**
[58] **Field of Search** 373/88, 91, 93; 219/145.1

[56] **References Cited**

U.S. PATENT DOCUMENTS

4,351,056	9/1982	Kiikka et al.	373/88
4,383,321	5/1983	Schieber et al.	373/88
4,530,853	7/1985	Lewallen et al.	373/88

Primary Examiner—Roy N. Envall, Jr.
Attorney, Agent, or Firm—Karl F. Ross; Herbert Dubno

[57] **ABSTRACT**

A graphite electrode with protective coating, consisting of a single- or multilayer metallic or metal-oxide coating, and a graphite layer containing graphite, vinyl-acetate as binder and methyl cellulose as thickener, this surface layer being compacted by means of a pressure roller or a vibration tool.

2 Claims, 1 Drawing Sheet

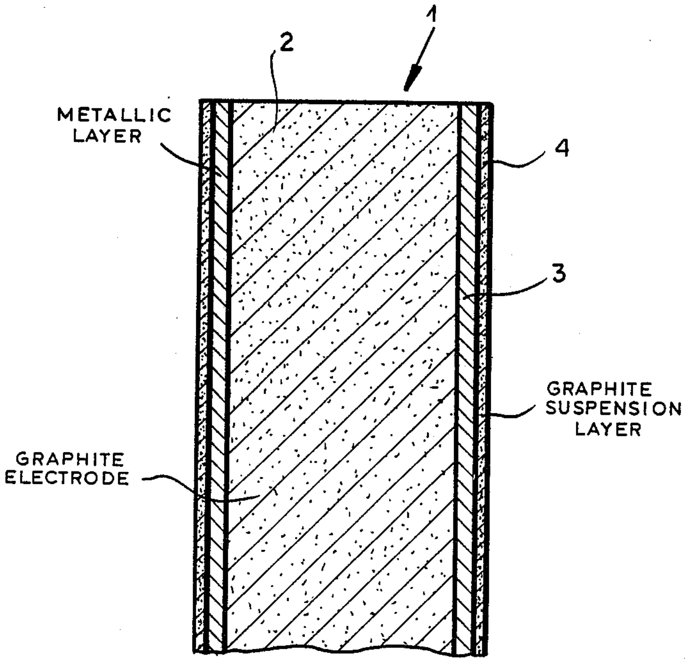

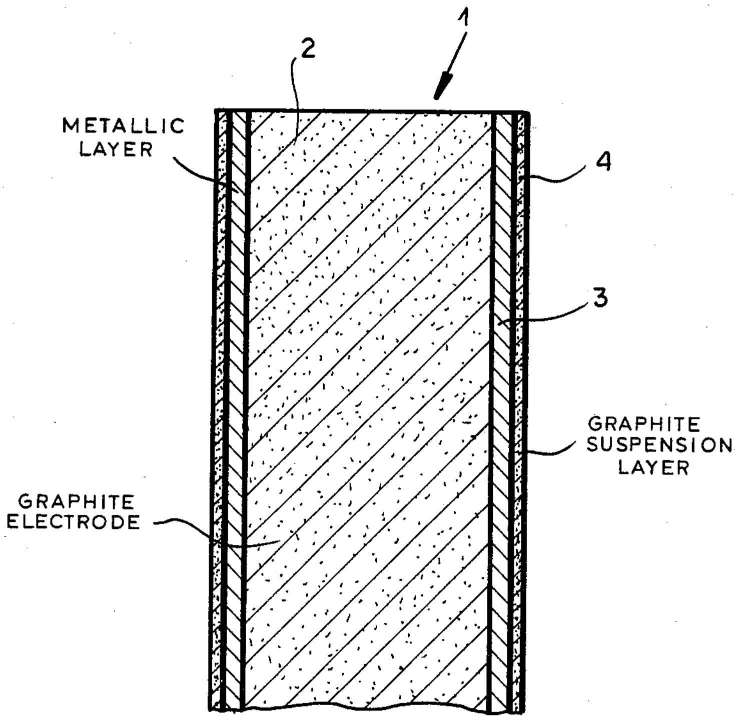
1
2
METALLIC LAYER
4
3
GRAPHITE SUSPENSION LAYER
GRAPHITE ELECTRODE

GRAPHITE ELECTRODE WITH PROTECTIVE COATING AND METHOD FOR ITS PRODUCTION

This invention relates to a graphite electrode with protective coating for steelmaking electric arc furnaces and a method for its production.

There are known electrodes with protective coating made up of aluminium with alloying admixtures treated with electric are (1). The drawback of such coatings lies in that as a result of the direct contact of the aluminium coating and the metal contact grip there occurs a partial welding together of the aluminium coating to the metallic (copper) contact grip. The surface burns up strongly and the contact grip must be replaced.

Another solution of this problem is searched by the use of graphite segments (2) between the graphite electrode with aluminium coating and the metal contact grip. A drawback of this method lies in that its use is in certain cases impossible or requires considerable reconstructions of the furnaces.

There is also known the application of a surface graphite layer onto the protective coating (1). In direct contact between the coating and the copper contact grip the welding together between them is reduced, but cannot be fully avoided.

There is known a graphite electrode with a coating of aluminium alloy, which has a surface layer of graphite with phenolicnovolac resin as binder, and polyvinyl alcohol is used as an adhesive agent (3). In its production the powdered materials are mixed with water, the polyvinyl alcohol being dissolved, and there is obtained a suspension of graphite and phenolic-novolac resin. This suspension is sprayed onto the protective coating. For the hardening of the surface layer there is necessary a temperature of from 150° to 180° C. The main drawback of this surface layer lies in its high contact resistance. The phenolic-novolac resin is insoluble in water, and this requires its use in quantities of from 15 to 30% with respect to the graphite, which means an introduction of considerable concentrations of non-conductive material.

In a superhigh-power furnace at 60,000 A, the power generated in the contact zone in the case of a coating with graphite layer and a copper contact grip reaches 120 to 180 kW; this causes local overheatings resulting in that the aluminium is molten. it penetrates through the graphite layer and is alloyed with the copper. Another drawback lies in the requirement for the temperature of the electrode during the application of the surface layer to be of from 150° to 180° C. If the temperature is lower than 150° C. the phenolic-novolac mixture does not polymerize, and the obtained surface layer has a very low mechanical strength and falls off to a great extent during transportation and handling of the electrodes.

The aforedescribed electrode (3) does not show in industrial application any advantages as compared to the direct contact, and also the known graphite layer (1) does not ensure a failure-free extended operation of the contact grips with electrodes with protective coating.

It is therefore a general object of this invention to develop a compact protective coating onto the metallic or metal-oxide surface layer of graphite electrodes and a method for its application, reducing at that several times the contact resistance and, respectively, the power generated in the interface between the graphite electrode and the metal contact grip, ensuring that the mechanical endurance of the graphite layer meets the service requirements in the use of protective electrodes.

This object is achieved by the application onto a graphite electrode, protected by a single- or multilayer metallic or metal-oxide coating, a graphite suspension which contains of from 100 to 1500 g graphite with a grain size of up to 2 mm, of from 20 to 150 g water-soluble vinyl-acetate adhesive, of from 10 to 80 g water-soluble methyl cellulose thickener, and from of 1000 to 1600 g water. The indicated quantities are for a surface of 1 m^2. The application of the graphite suspension is effected by spraying, spreading or by another suitable means. The applied graphite layer is subjected to a mechanical treatment for compacting its structure by means of a pressure roller, a vibration tool or by another suitable means.

The advantages of the method according to this invention lie in that the compacted graphite layer has a 3 to 5 times lower contact resistance or, respectively, reduced power generated in the contact heads and has a sufficient mechanical endurance to meet the service requirements for the use of protected graphite electrodes.

For a better understanding of the invention, it will be explained by means of the following examples.

EXAMPLE 1

Onto the uppermost layer of a graphite electrode protected by a single- or multilayer metallic protective coating there is applied by spraying a suspension containing 700 g of graphite with a grain size of up to 1 mm, 35 g of a water-soluble vinyl-acetate adhesive, 25 g of water-soluble methyl cellulose and 1350 cm^3 of water.

The applied and not fully dried layer is compacted at a temperature of the electrode of about 100° C. by rolling with a metal roller.

EXAMPLE 2

Onto the uppermost layer of a graphite electrode protected by a single- or multilayer metal-oxide coating there is applied by spraying a suspension containing: 1000 g electrographite with a grain size of up to 1.5 mm, 45 g of a water-soluble vinyl-acetate adhesive, 20 g of water-soluble methiyl cellulose and 1000 cm^3 of water.

The applied and not fully dried layer is compacted at a temperature of the electrode of about 100° C. with a vibration tool.

The graphite electrodes with compacted protective graphite layer according to examples 1 and 2 are featured by a 3 to 5 times reduced contact resistance—the voltage drop in the contact surfaces is of from 550 to 1300 mV at a current density of 50 A/cm^2.

We claim:

1. A coated electrode comprising:
a graphite electrode;
a metallic or metal-oxide layer coating said electrode; and
a compacted graphite layer containg a binder coating said metallic or metal-oxide layer, wherein said graphite layer contains graphite with a grain size of up to 2 mm in a quantity of 200 to 2000 g/m^2, a water-soluble vinyl-acetate as a binder of from 2 to 20% by weight, and methyl cellulose as a thickener of from 1 to 10% by weight.

2. A method for producing a coated electrode comprising the steps of:
forming a graphite electrode;

coating said electrode with a metallic or metal-oxide layer;

coating said metallic or metal-oxide layer with a graphite suspension layer, wherein said graphite layer contains graphite with a grain size of up to 2 mm in a quantity of 200 to 2000 g/m^2, a water-soluble vinyl-acetate as a binder of from 2 to 20% by weight, and methyl cellulose as a thickener of from 1 to 10% by weight upon drying; and

subjecting said graphite layer to mechanical compaction by means of a pressure roller or a vibration tool.

* * * * *

United States Patent [19]

Peev et al.

[11] **Patent Number: 4,750,187**

[45] **Date of Patent: Jun. 7, 1988**

[54] GRAPHITIC ELECTRODE WITH PROTECTIVE COATING

[75] Inventors: **Vassil G. Peev; Maksim O. Tzonevski**, both of Sofia, Bulgaria

[73] Assignee: **N P P PO Elektrotermia**, Sofia, Bulgaria

[21] Appl. No.: **764,940**

[22] Filed: **Aug. 12, 1985**

[51] **Int. Cl.⁴** **H05B 7/06; H05B 7/08**

[52] **U.S. Cl.** **373/88**

[58] **Field of Search** 373/88, 64, 95; 106/287.17, 286.5

[56] **References Cited**

U.S. PATENT DOCUMENTS

3,348,929	10/1967	Valtschev et al.	373/88
3,476,586	11/1969	Valtschev et al.	373/88
3,553,010	1/1971	Rubisch et al.	373/88
4,252,856	2/1981	Sara	373/88
4,383,321	5/1983	Schieber et al.	373/88
4,530,853	7/1985	Lewallen et al.	373/88

Primary Examiner—Roy N. Envall, Jr.

Attorney, Agent, or Firm—Klein and Vibber

[57] ABSTRACT

The protective coating consists of three layers. As alloying additives in the first and second layer or only in the second layer are used, nickel and iron or their oxides whereby the nickel content is from 0.05 to 0.95% and the iron content is, respectively, from 0.1 to 15% with regard to the total amount of aluminum. Both layers are submitted to heat treatment with surface density of the heat flow from 8 to 16.10^6 W/m^2. The third layer consists of aluminum with technical grade purity.

The thus described graphitic electrodes are used in arc furnaces.

4 Claims, 1 Drawing Sheet

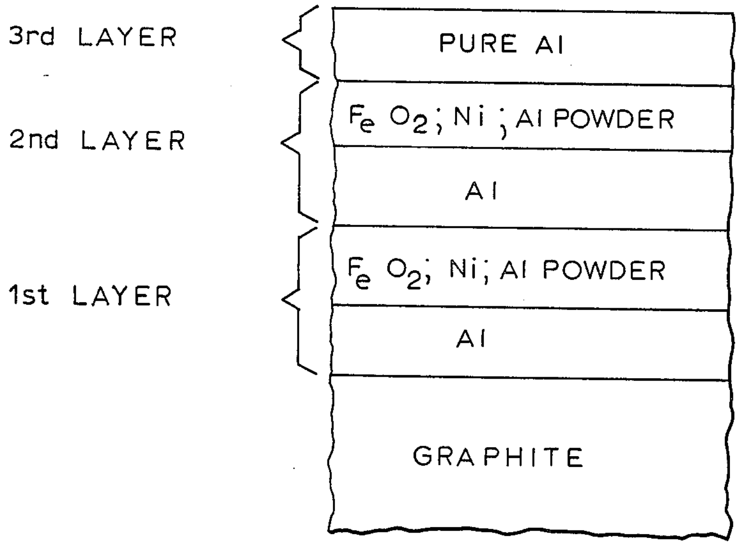

FIG. 1

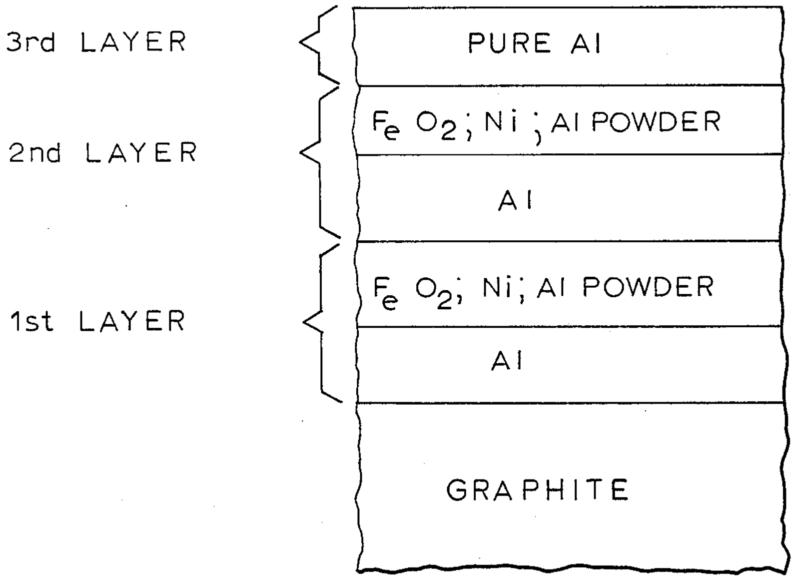
3rd LAYER
PURE Al
2nd LAYER
Fe O2; Ni ; Al POWDER
Al
1st LAYER
Fe O2; Ni; Al POWDER
Al
GRAPHITE

FIG. 2

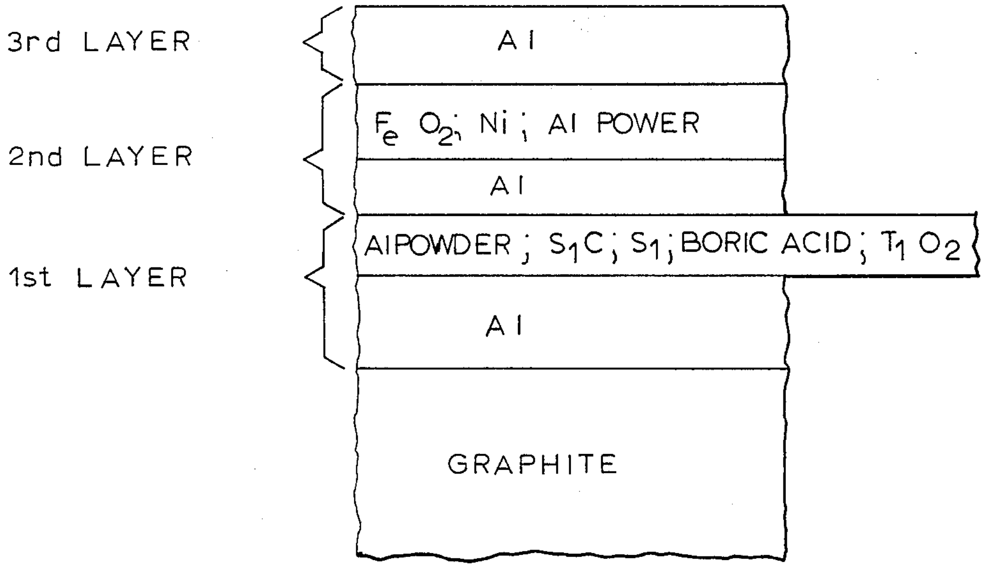
3rd LAYER
Al
2nd LAYER
Fe O2; Ni ; Al POWER
Al
1st LAYER
AlPOWDER ; S1C ; S1 ; BORIC ACID ; T1 O2
Al
GRAPHITE

GRAPHITIC ELECTRODE WITH PROTECTIVE COATING

This invention relates to graphitic electrodes which are provided with a protective coating, such electrodes being used in arc furnaces.

Protective coatings for graphitic electrodes having one or more protective layers, and the method for forming same, are described in Bulgarian Authorship Certificate No. 11,029, 02.09.1965. In accordance with this method, the separate layers of the coatings are formed by electric arc treatment of a metallized aluminium layer on which there is deposited a mixture of alloying additives. In accordance with Bulgarian Authorship Certificate No. 136, 01.12.1960, these alloying additives contain silicon carbide, titanium dioxide, boric acid, and aluminium in powder form.

The disadvantage of the described prior art coating is their relatively low corrosion resistance at a temperature of 1550° C. in an oxidizing medium.

The invention has among its objects the provision of a coating on graphitic electrodes with higher corrosion resistance than the corrosion resistance of existing coatings on such electrodes at a temperature of 1600° C. in the atmosphere.

This object is achieved by a protective coating consisting of three layers and formed according to the method described in (1). As alloying additives kin the first and second layer or only in the second layer are used nickel and iron or their oxides whereby the content of nickel is in the range from 0.05% to 0.95% and of iron in the range from 0.1% to 15% with regard to the total amount of aluminium. Both layers are submitted to a heat treatment with a surface density of the heat flow 8 to 16.10^6 W/m^2.

The third layer consists of aluminium with technical grade purity.

The thus formed multi-layer coating exhausts its protective properties at a temperature of 1600° C. in the atmosphere after 11 to 14 hours. By way of contrast, the described known coatings under the same conditions exhaust their protective properties after only 4 to 5 hours.

BRIEF DESCRIPTION OF THE DRAWING

With these and other objects in view, which will become apparent in the following examples, the present invention, which is shown by example only, will be clearly understood in connection with the accompanying drawing, in which:

FIG. 1 is a schematic cross section view of the coating of Example 1; and

FIG. 2 is a schematic cross section view of the coating of Example 2.

The invention is illustrated by the following examples:

EXAMPLE 1

On the surface of a graphitic electrode there was applied by metallization, a first layer consisting of aluminium with a technical grade purity in an amount of 700 g/m^2. Over such first layer of aluminium there was applied a blend with the following content: 35 g/m^2 iron oxide, 10 g/m^2 nickel, and 18 g/m^2 aluminium powder. This was followed by heat treatment with a surface density of the heat flow of 12.10^6 W/cm^2. These two coatings comprise the first of three layers, said first layer being an alloy Al-Fe-Ni. A second layer was formed in the same manner as the first layer, said second layer being treated in exactly the same manner as the first layer. Finally, there was applied a third layer of pure aluminum in the amount of 1150 g/m^2 by metallization, and then the surface was polished by a wire brush.

EXAMPLE 2

On the surface of a graphitic electrode there was applied by metallization a first layer of aluminium technical grade purity in the amount of 590 g/m^2. Over it there was applied a blend containing 57 g/m^2 aluminium powder, 60 g/m^2 silicon carbide, 64 g/m^2 silicon, 38 g/m^2 boric acid, and 74 g/m^2 titanium dioxide. These two coatings form the first layer which was heat treated with a surface density of the heat flow of 8.10^6 W/m^2. Thus the first layer is an alloy Al-Si-Ti-B. Following this, a second layer of aluminium applied by metallization in an amount of 850 g/m^2 was applied over the first layer. Over such aluminium coating there was applied a blend containing 80 g/m^2 iron oxide, 12 g/m^2 nickel, and 20 g/m^2 aluminium powder. This was followed by heat treatment with a surface density of the heat flow of 15.10^6 W/m^2. Thus the second layer is an alloy Al-Ni-Fe. Finally, a third layer composed of aluminium was applied by metallization in an amount of 1100 g/m^2 is applied to the previously applied coatings on the electrode; the outer surface of the last applied aluminium coating was polished by a wire brush.

Although the invention is described and illustrated with reference to a plurality of embodiments thereof, it is to be expressly understood that it is in no way limited to the disclosure of such preferred embodiments but is capable of numerous modifications within the scope of the appended claims.

We claim:

1. A graphitic electrode having a protective coating, said coating comprising a first, second and third layer;
   said first and second layer each being an alloy consisting of metallized aluminium and a blend containing aluminium powder, silicon carbide, silicon, titanium dioxide and boric acid;
   said first and second layers being treated by electric arc;
   said third layer consisting of pure aluminium; and
   said first and second layers containing from 0.5 to 0.95% nickel and from 0.1% to 15% iron with regard to the total amount of aluminum.

2. A graphitic electrode having a protective coating electrodes as claimed in claim 1, wherein the first and the second layers are heat treated with a surface density of the heat from 8×10^6 to 16×10^6 W/m^2.

3. A graphitic electrode having a protective coating, said coating comprising a first, second and third layer;
   said first and second layer each being an alloy consisting of metallized aluminium and a blend of aluminium powder, silicon carbide, silicon, titanium dioxide and boric acid;
   said first and second layers being treated by electric arc;
   said third layer consisting of pure aluminium; and
   said second layer containing from 0.5 to 0.95% nickel and from 0.1% to 15% iron with regard to the total amount of aluminum.

4. A graphitic electrode having a protective coating as claimed in claim 3, wherein the first and the second layers are heat treated with a surface density of the heat from 8×10^6 to 16×10^6 W/m^2.

* * * * *

US005117439A

United States Patent [19]

Dagata et al.

[11] **Patent Number: 5,117,439**

[45] **Date of Patent: May 26, 1992**

[54] **METHOD FOR OPERATING AN ELECTRODE GRAPHITIZATION FURNACE**

[75] Inventors: **Frank J. Dagata**, Middleburg Heights; **Kenneth G. Politowicz**, Brunswick, both of Ohio

[73] Assignee: **Ucar Carbon Technology Corporation**, Danbury, Conn.

[21] Appl. No.: **677,109**

[22] Filed: **Mar. 29, 1991**

[51] **Int. Cl.**^{5} **H05B 7/06**

[52] **U.S. Cl.** **373/88**; 373/91; 373/93; 373/114; 62/216; 264/27; 428/408

[58] **Field of Search** 373/88, 89, 90, 91, 373/92, 93, 114, 131; 62/64, 216; 264/27, 29.5; 428/408

[56] **References Cited**

U.S. PATENT DOCUMENTS

1,029,121	6/1912	Heroult	373/114
4,332,856	6/1982	Hsu	428/408
4,422,303	12/1983	Rothenberg et al.	62/216
4,594,772	6/1986	Böder	373/91
4,852,120	7/1989	Udo	373/95
4,942,002	7/1990	Feist	264/27
4,998,709	3/1991	Griffin et al.	264/29.5

Primary Examiner—Bruce A. Reynolds
Assistant Examiner—Tu Hoang
Attorney, Agent, or Firm—E. Lieberstein

[57] **ABSTRACT**

The electric furnace operating cycle time is substantially reduced by directing water into the porous pack of carbonaceous material surrounding the electrodes at a water rate adjusted to maximize vaporization of water into steam within the porous pack while allowing the steam to escape without contacting the electrodes.

10 Claims, 4 Drawing Sheets

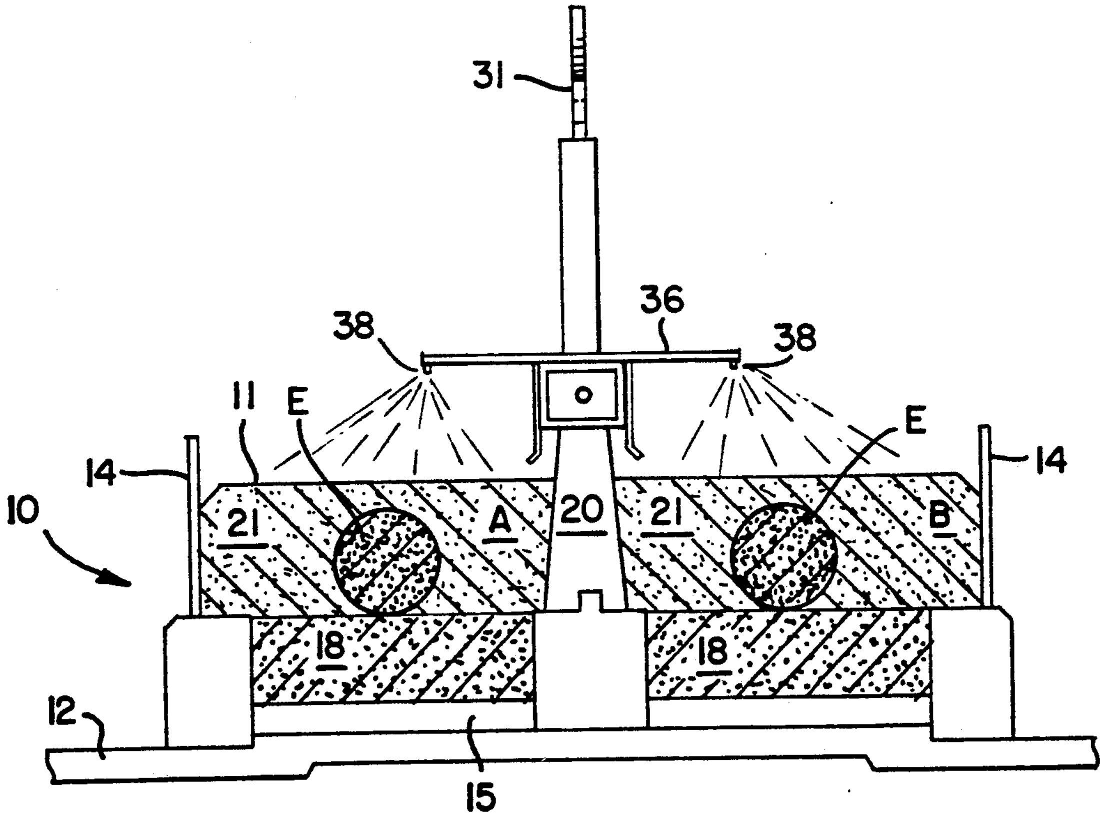

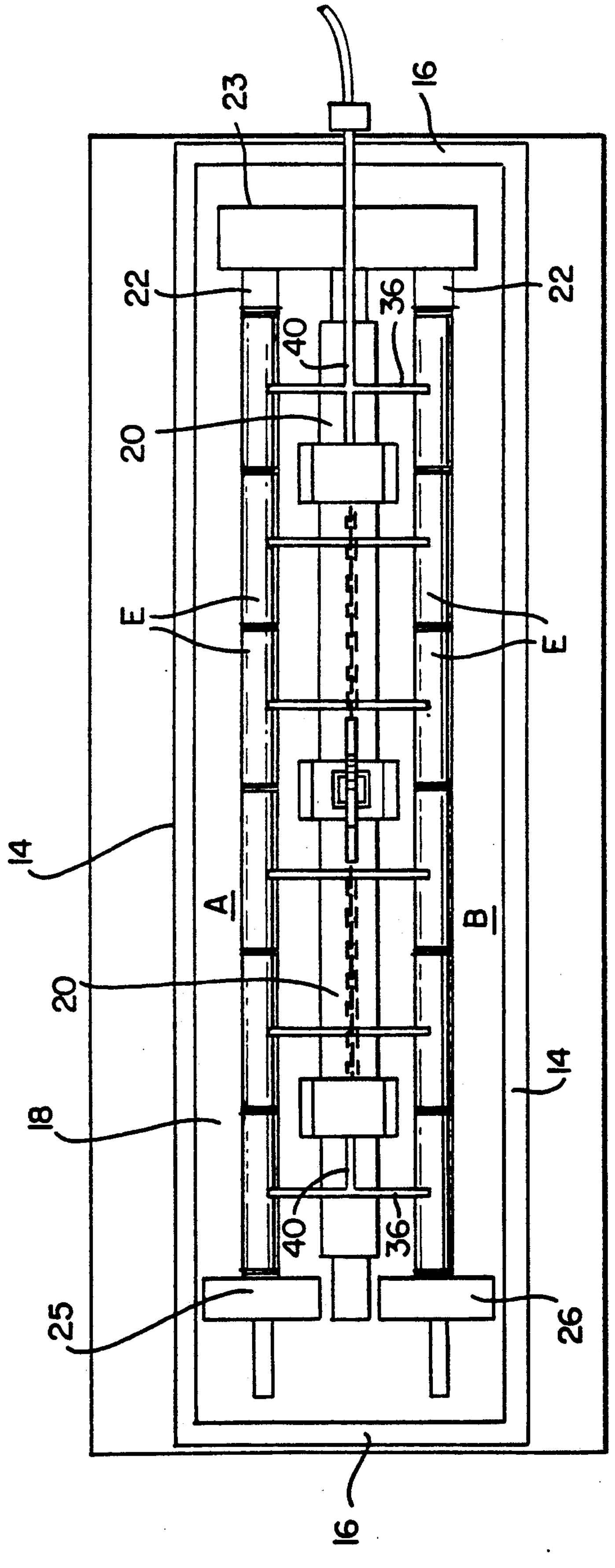

FIG. 1

FIG. 3

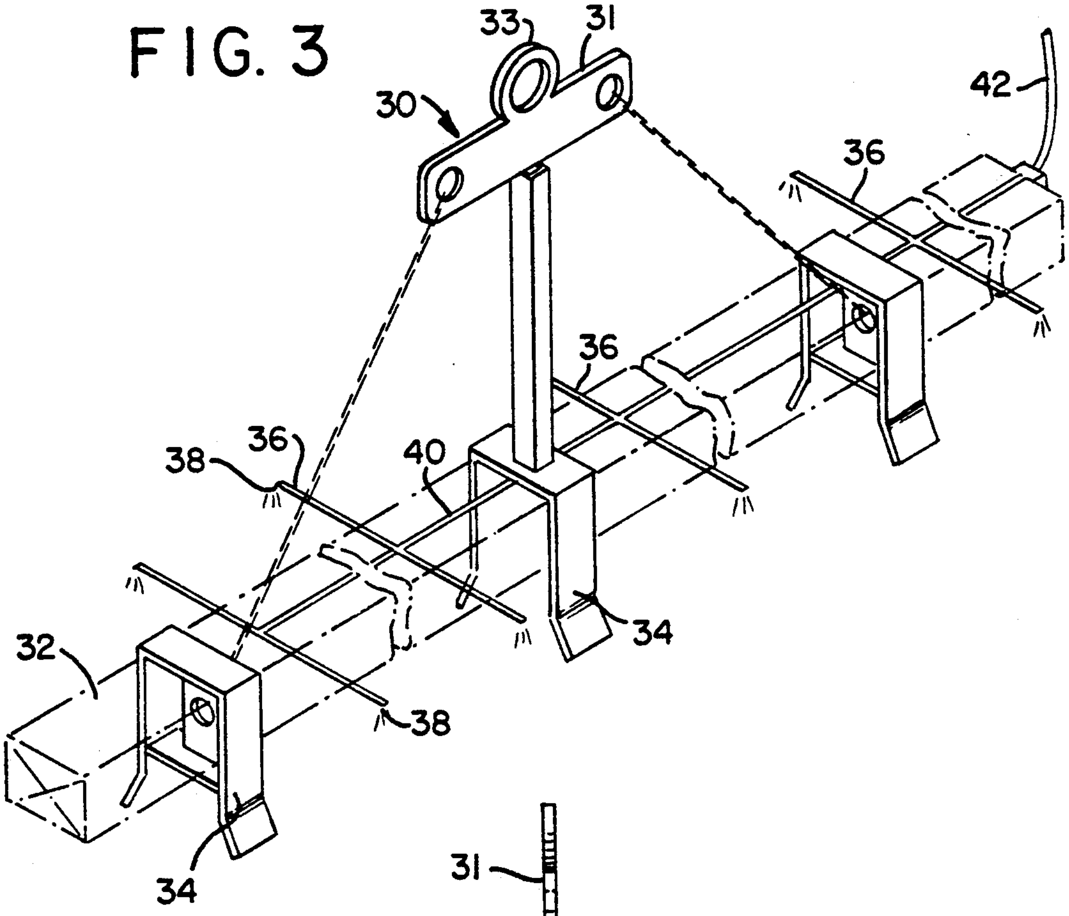
33
31
30
42
36
36
38
36
40
34
32
38
34

FIG. 2

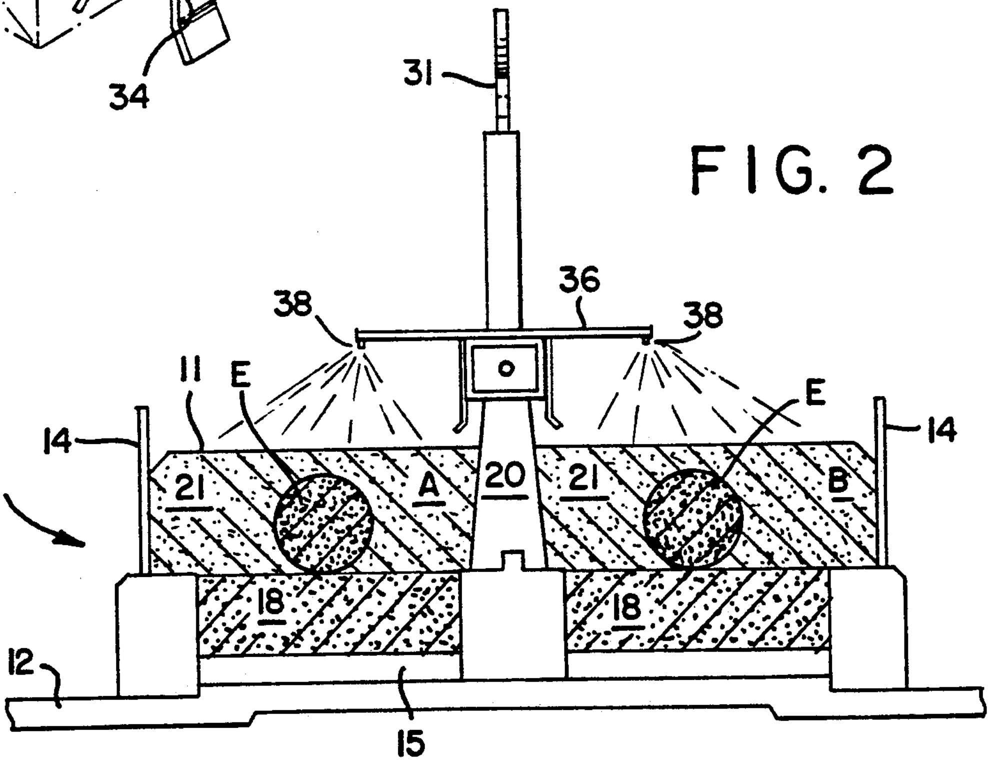
31
36
38
38
11
E
E
14
14
10
21
A
20
21
B
18
18
12
15

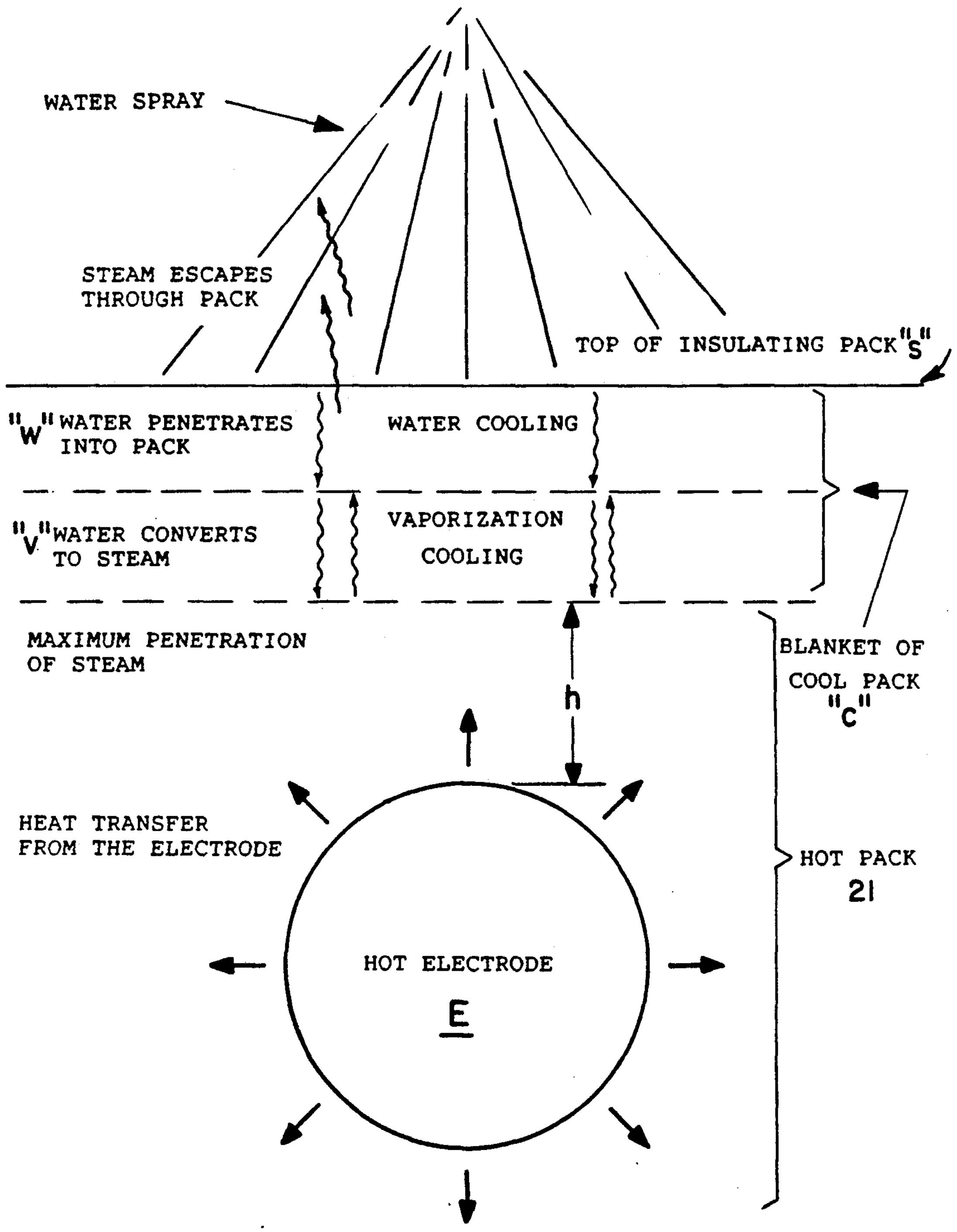
WATER SPRAY
STEAM ESCAPES THROUGH PACK
TOP OF INSULATING PACK "S"
"W" WATER PENETRATES INTO PACK
WATER COOLING
"V" WATER CONVERTS TO STEAM
VAPORIZATION COOLING
MAXIMUM PENETRATION OF STEAM
BLANKET OF COOL PACK "C"
h
HEAT TRANSFER FROM THE ELECTRODE
HOT ELECTRODE
E
HOT PACK
21

FIG. 4

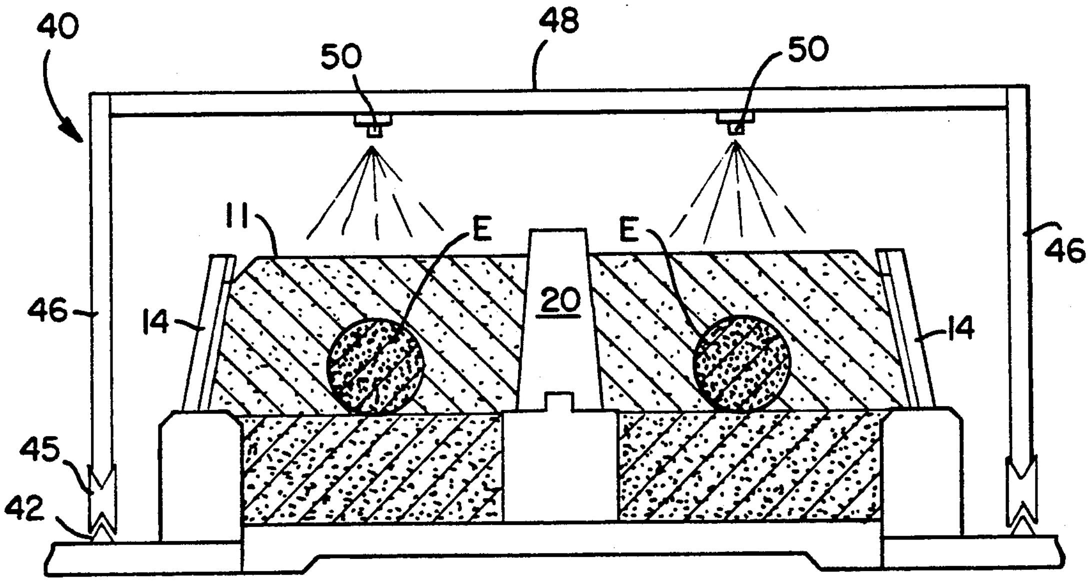

FIG. 5

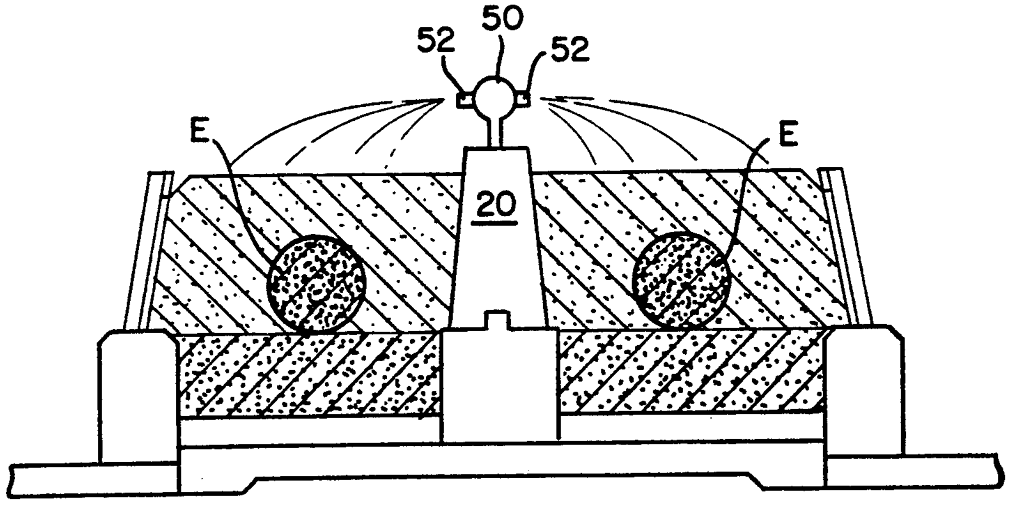

FIG. 6

METHOD FOR OPERATING AN ELECTRODE GRAPHITIZATION FURNACE

FIELD OF THE INVENTION

This invention relates to an improved method for operating an electric furnace in the manufacture of graphite electrodes.

BACKGROUND OF THE INVENTION

Graphite electrodes are used in the manufacture of steel. The graphite electrode is formed from a carbon electrode which is graphitized at temperatures exceeding 2800° C. in an electrode graphitization furnace. Because of the high temperature required to graphitize the electrode, an extremely long cool down time period is required before the furnace can be unloaded and reloaded with fresh stock. This limits process capacity. Over eighty percent (80%) of the furnace cycle time involves waiting for the electrodes to cool before unloading and waiting for the unloaded furnace bed to cool before reloading. Attempts to unload a hot furnace results in surface oxidation of the electrodes, thermal damage to furnace components, thermal damage to handling equipment, excessive oxidation of the insulating pack and an unsafe working environment. Reloading a furnace with a hot bed can also lead to worker injury and haphazard loading procedures. Construction of additional furnaces to increase capacity is inefficient and expensive. Accordingly, a method has long been sought to reduce the cool down time period for the electrodes after they have been graphitized and/or to reduce the cool down time period of the furnace bed for reloading the furnace.

SUMMARY OF THE INVENTION

It has been discovered in accordance with the present invention that the furnace cool down time period and the recycle time for reloading the furnace with fresh carbon electrodes can be substantially reduced by spraying water over the insulating pack of granulated coke particles surrounding the electrodes, in a controlled manner, as will be explained at length hereinafter, for cooling the furnace without causing contact between the cooling water and the electrodes. The rate of cooling water applied to the insulating pack is controlled so that the cooling water is converted to water vapor with essentially no water or water vapor coming into contact with the electrodes. If water, or water vapor above a nominal amount, should come into contact with a carbon electrode at the temperature of graphitization a reaction may occur generating explosive gases or at minimum the electrode will burn and be damaged. Accordingly, heretofore, water has never been considered a viable option for furnace cooling.

The method for operating an electric furnace in accordance with the present invention comprises:

loading ungraphitized carbon electrodes upon a bed of carbonaceous material into said furnace;

surrounding said carbon electrodes with presized granular particles of carbonaceous material to form a porous pack of thermal insulation;

passing electric current through or around said carbon electrodes to elevate the temperature of said electrodes to a temperature above 2800° C. for converting carbon to graphite;

terminating said current flow;

directing water into said porous pack of carbonaceous material with the rate of water adjusted to maximize vaporization of water into steam while allowing a sufficient amount of water to percolate through said porous pack to a controlled depth to form a cool blanket of packing material over said electrodes with essentially no water or water vapor coming into contact with the electrodes; and

removing the graphitized electrodes from the furnace.

BRIEF DESCRIPTION OF THE DRAWINGS

Other advantages of the invention will become apparent from the following detailed description of the invention when read in conjunction with the accompanying drawings of which:

FIG. **1** is a diagrammatic plan view of an electric furnace for converting carbon electrodes to graphite electrodes and includes one embodiment of a water spray assembly for practicing the method of the present invention;

FIG. **2** is a cross sectional view taken along the lines **2**—**2** of FIG. **1**;

FIG. **3** is a perspective view of the water spray assembly of FIG. **1**;

FIG. **4** is a graphic illustration of the water cooling heat transfer relationship in the insulating pack during the furnace operation;

FIG. **5** is a cross sectional view of the furnace of FIG. **1** with an alternate water spray cooling assembly; and

FIG. **6** is a view similar to FIG. **5** with yet another water spray assembly for providing a different water spray pattern.

DETAILED DESCRIPTION OF THE PREFERRED EMBODIMENT

Carbon electrodes are converted to graphite electrodes in an electric furnace by raising the temperature of the electrodes to a temperature exceeding 2800° C. The arrangement of the electrodes for a typical graphitization furnace is shown in FIG. **1**-**2** in conjunction with a water spray assembly for practicing the method of the present invention. The electric furnace **10** is constructed in the form of a rectangular enclosure having an open top **11**, a concrete floor or base support **12**, side walls **14** and end walls **16**. Refractory blocks **15**, e.g. of fire brick are mounted over the concrete floor **12**. A bed **18** of a carbonaceous refractory packing material e.g. of coke, is placed over the refractory blocks **15** to form a uniform conductive refractory body upon which to rest the electrodes E. A center wall **20** divides the furnace **10** into two sections A and B respectively, each of which contains a multiple number of electrodes E arranged in parallel rows. A pack **21** of granular carbonaceous material preferably of coke, surrounds the electrodes E. The granular material forming the pack **21** is presized to form a porous refractory thermal insulating body which permits volatiles to pass through the pack **21** during the firing cycle and to escape through the open top **11** of the furnace **10**.

The electrodes E are arranged in line formation in parallel rows with the electrodes aligned end to end within each section A and B of the furnace **10**. The row of electrodes E in section A are bridged at one end of the furnace **10** to the row of electrodes E in section B through spacers **22** and a graphite cross-over member **23** to form a series circuit between the electrodes E of section A and the electrodes E of section B. Terminal posts **25** and **26** connect the electrodes E at the opposite end of the furnace **10** through electrical contacts (not shown) to a power supply (not shown) for directing electric current through the electrodes E to graphitize the carbon electrodes E at an elevated temperature of above 2800° C. as is well known to those skilled in the art. The graphitizing operation is generally fully completed in about 40 hours. Upon completion of the graphitizing cycle electrical power is shut off and the cooling cycle is initiated. The cooling cycle covers a cool down time period to reduce the electrode temperature to a temperature which permits removal of the electrodes from the furnace and a cooling period to reduce the temperature of the refractory bed **18** to a temperature which permits reloading the furnace with new carbon electrodes. The combined cooling time represents the complete cooling cycle which is generally from four to six times as long as the furnace firing time.

The furnace **10** is cooled in accordance with the present invention using a cooling system as is exemplified in FIGS. **1** and **3** inclusive. In FIG. **3** a removable frame **30** is shown which includes an angle lift **31** with an eye hook **33** adapted to be lifted by a crane (not shown) for positioning the frame **30** over the center wall **20** of the furnace **10**. The frame **30** includes a box-like girder **32** with reinforced open web joints **34** spaced apart along the length of the girder **32** which rest on the center wall **20**. A multiple number of cross pipes **36** are fixedly secured to the girder **32** for supplying water to water spray nozzles **38** attached to the opposite ends of the cross pipes **36**. A water supply feed line **40** extends along the girder **32** longitudinally and intersects each of the cross pipes **36** to form a common supply line for each of the nozzles **38** via the cross pipes **36**. The water supply feed line **40** is coupled through a quick disconnect (not shown) to a hose **42** which is connected to a pressure regulated water supply (not shown).

At least one water spray nozzle **38** extends from each cross pipe **36** over each section A and B respectively. The cross pipes **36** are spaced relatively evenly apart over the length of the girder **32** which corresponds to the length of the furnace **10** and may be **70** or more feet long. The spacing between cross pipes **36** is calculated to establish a uniform distribution of water over the porous pack **21**.

The water emitted from the nozzles **38** is sprayed into the pack **21** at a flow rate which is preferably uniform and balanced. The water percolating through the pack **21** should not come into contact with the electrodes E. Accordingly, the rate at which the water is applied is critical and is dependent upon the permeability of the insulating pack **21**. To achieve maximum cooling of the pack **21** it is essential that enough water passes below the surface of the pack **21** to form a cool blanket C of packing material before complete vaporization occurs i.e. the submerged water should vaporize above the electrodes E and escape through the cool blanket C of packing material. This is apparent from FIG. **4** which is a graphic illustration of the water cooling heat transfer relationship in the pack **21**. The cool blanket C of packing material extends from the top surface S and is composed of an area W saturated with water and a contiguous area V of vaporized water which lies above the electrodes E. Vaporized cooling within the pack **21** is as much as ten times more efficient than liquid water cooling. The water vapor escapes through the blanket C to prevent any contact with the electrodes E so as to avoid burning the electrodes. In theory you want to spray a sufficient amount of water to form a water saturated area W of limited depth with an adjacent area V of vaporized water spaced from the electrodes E. Although the majority of the water will initially vaporize upon contact with the top surface S of the hot pack **21** the amount of applied water must be sufficient for enough excess water to percolate through the pack **21** to form a blanket C of cool packing material containing a water saturated area W. The conversion from water to steam provides very efficient cooling of the underlying hot insulating pack **21** surrounding the electrodes E. As the cool water percolates through the pack **21**, it is, in effect, reducing the thickness of the hot pack **21** to speed cooling. The cool blanket C of packing material lies above the underlying hot pack **21** and removes the heat from the hot pack **21** faster than natural or forced air convection can.

As stated above, the rate at which the water is applied depends on the permeability of the insulating pack **21**. Accordingly, each pack **21** will require a different water application rate. For example, various furnaces have been water spray cooled with a water application rate of between 4–25 gallons per minute. Total application of water has also varied from between 6000–16,000 gallons depending on the furnace temperature, pack permeability and desired cooling rate.

After unloading the graphitized electrodes E, additional cooling is required to cool the underlying bed **18** before the furnace **10** can be reloaded with ungraphitized carbon electrodes. This may involve a time period of up to 120 hours. The bed **18** must be restored to a safe loading temperature to avoid worker injury and haphazard loading procedures. In accordance with the present invention, cooling of the bed **18** after the graphitized electrodes are removed may be accelerated by applying water to the bed at a rate to maximize cooling of the bed **18** but limited the bed **18** is converted to steam by vaporization prior to reloading fresh electrodes E. Preferably, water should be applied to cool the bed **18** at a rate of between 4 to 25 gallons per minute using 150–3000 gallons total.

The water spray pattern is not critical to the present invention. In FIG. **2** water is sprayed from a cooling system in which the removable frame **30** is supported by the center wall **20**. In this arrangement the frame **30** may be lifted and transported to another furnace. An alternate removable assembly for spraying cooling water on the pack **21** is shown in FIG. **5**. A removable frame **40** is supported over guide rails **42** using V rollers **45** which are removably mounted over the guide rails **42** on opposite sides of the furnace side walls **14**. The V - rollers **45** are connected to the upright supports **46** of the frame **40**. The upright supports **46** are connected to an overhead support **48** located above the open top end **11** of the furnace **10**. A plurality of water spray nozzles **50** are connected through piping (not shown) in the overhead support **48** for supplying water to the nozzles **50**. The frame **40** has a multiple number of overhead supports **48** spaced uniformily along the length of the furnace with at least one water spray nozzle **50** suspended from an overhead support **48** over each section A and B respectively.

Another assembly for spraying cooling water on the pack **21** is shown in FIG. **6**. In this arrangement the spray nozzles **52** are connected through a common manifold **54** which is connected to piping (not shown) extending through the center wall **20** for supplying water to the spray nozzles **52**. The water is sprayed outwardly in a horizontal trajectory from the center wall **20**. The pattern of water spray from the nozzles **52** is inherently different from the overhead spray arrangement of FIGS. **2** and **5**. Alternately, the nozzles **52** may be connected to spray the water in a vertical trajectory with an umbrella-like spray. The pattern of water spray may also be varied so that the water is applied as water droplets rather than as a spray.

What we claim is:

1. A method for operating an electric furnace in the conversion of carbon electrodes to graphite electrodes comprising the steps of:

loading ungraphitized carbon electrodes upon a bed of carbonaceous material, into said furnace;

surrounding said carbon electrodes with presized granulated particles of carbonaceous material to form a porous pack of thermal insulation;

passing electric current through or around said carbon electrodes to elevate the temperature of said electrodes to a temperature above 2800° C. for converting the carbon electrodes into graphitized electrodes;

terminating said current flow;

directing water into said porous pack of carbonaceous material to form a cool blanket of packing material over said electrodes with the rate of water adjusted to percolate through said porous pack to a controlled depth represented by an area saturated with water and an area of vaporized water with the vaporization of water into steam occurring at a rate such that essentially no water or water vapor comes into contact with the electrodes; and

removing the graphitized electrodes from the furnace.

2. A method as defined in claim **1** wherein said ungraphitized carbon electrodes are loaded into said furnace with the electrodes aligned end to end in an electrical series circuit relationship.

3. A method as defined in claim **2** wherein said furnace has a common center wall and wherein at least one row of electrodes is aligned on opposite sides of said center wall and connected through a common cross-over member.

4. A method as defined in claim **4** wherein said rate of water applied to said porous pack is between 4 and 25 gallons per minute.

5. A method as defined in claim **5** wherein said cooling water is applied to said porous pack through a plurality of uniformly distributed water nozzles suspended above said porous pack.

6. A method as defined in claim **4** wherein said water is applied to said porous pack through a plurality of uniformly distributed water nozzles extending from a common manifold supported by said common center wall.

7. A method as defined in claim **5** wherein said water is applied in the form of a spray.

8. A method as defined in claim **5** wherein said water is applied in the form of water droplets.

9. A method as defined in claim **1** further comprising applying water to said bed of carbonaceous material after the graphitizing electrodes are removed.

10. A method as defined in claim **9** wherein said water is applied at a rate of between 4 to 25 gallons per minute.

* * * * *

US005299225A

United States Patent [19]

Karagoz et al.

[11] **Patent Number: 5,299,225**

[45] **Date of Patent: Mar. 29, 1994**

[54] **GRAPHITIZATION FURNACE**

[75] Inventors: **Berch Y. Karagoz**, Grand Island; **Joseph M. Rua**, Tonawanda; **Lyman T. Moore**, Niagara Falls, all of N.Y.; **Larry E. Ledford**, Valdese, N.C.; **Donald P. Allen**, Niagara Falls, N.Y.; **Gregory Agnello**, Niagara Falls, N.Y.; **Thomas E. Fleckenstein**, Ransomville, N.Y.

[73] Assignee: **Sigri Great Lakes Carbon Corp.**, Briarcliff Manor, N.Y.

[21] Appl. No.: **886,062**

[22] Filed: **May 20, 1992**

[51] **Int. Cl.^{5}** **F27D 3/00**

[52] **U.S. Cl.** **373/115**; 373/88; 373/110; 373/120; 62/216; 264/27; 428/408

[58] **Field of Search** 373/88, 91, 93, 114, 373/115, 120, 125, 110; 62/216; 264/27; 428/408

[56] **References Cited**

U.S. PATENT DOCUMENTS

H520	9/1988	Johnson et al.	156/617.1
1,029,121	6/1912	Heroult	373/114
3,843,106	10/1974	Nanjyo et al.	373/76
3,947,621	3/1976	Collin et al.	373/122
4,015,068	3/1977	Vohler	373/110
4,017,673	4/1977	Michels et al.	373/133
4,394,766	7/1983	Karagoz	373/120
4,475,207	10/1984	Karagoz	373/115
4,916,714	4/1990	Antoni et al.	373/120
5,117,439	5/1992	Dagata et al.	373/88

Primary Examiner—Bruce A. Reynolds
Assistant Examiner—Tu Hoang
Attorney, Agent, or Firm—Adrian J. Good

[57] **ABSTRACT**

A lengthwise graphitization furnace for the conversion of a string of amorphous carbon bodies to graphite has an open semi-cylindrical shell of corrugated steel modules lined with cast refractory. The combination of the corrugated shell and cast refractory liner contributes to faster heat transfer by both convection and radiation, and to greater mechanical and thermal stability. The furnace is designed in modules allowing for easy replacement of worn components.

12 Claims, 14 Drawing Sheets

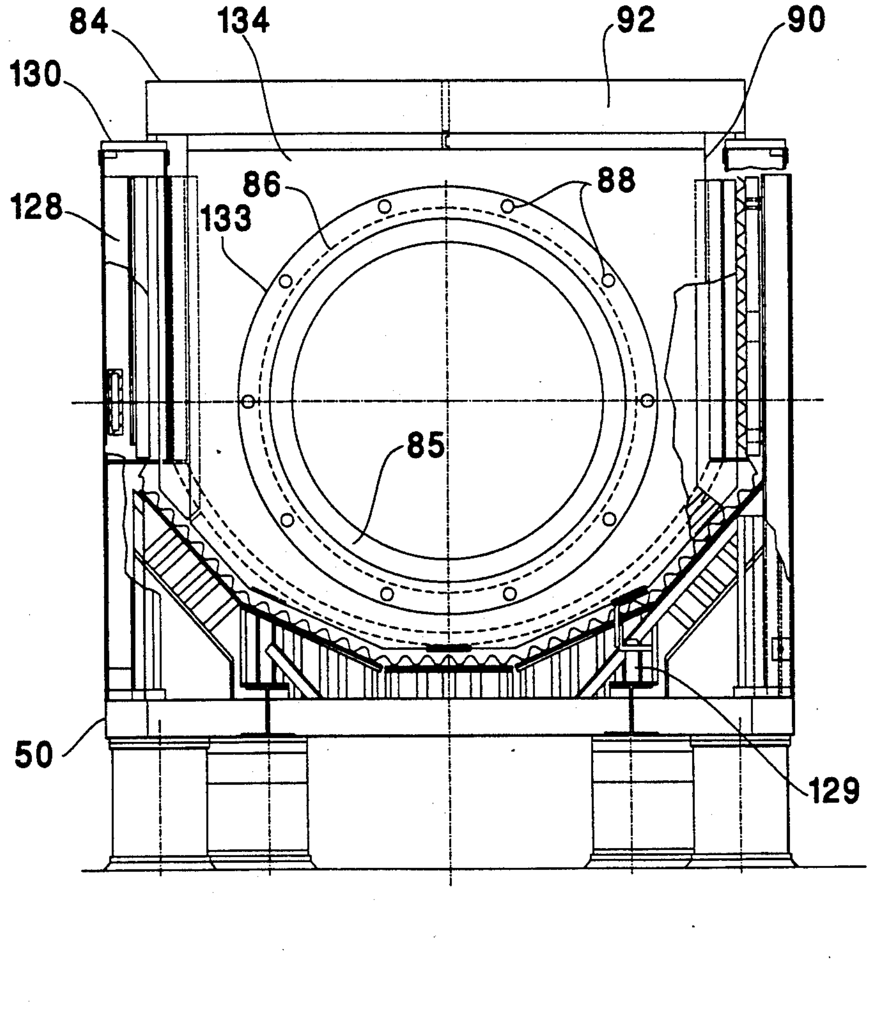

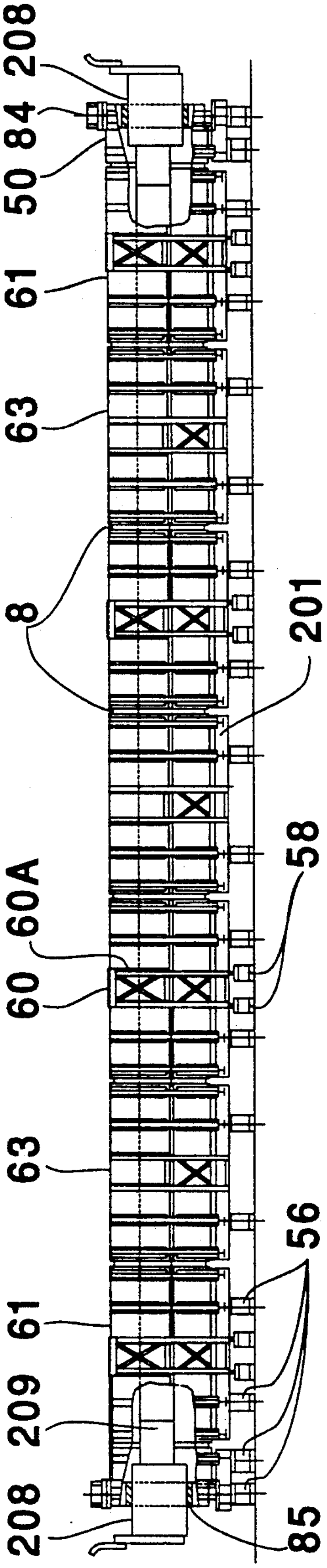

FIG. 1

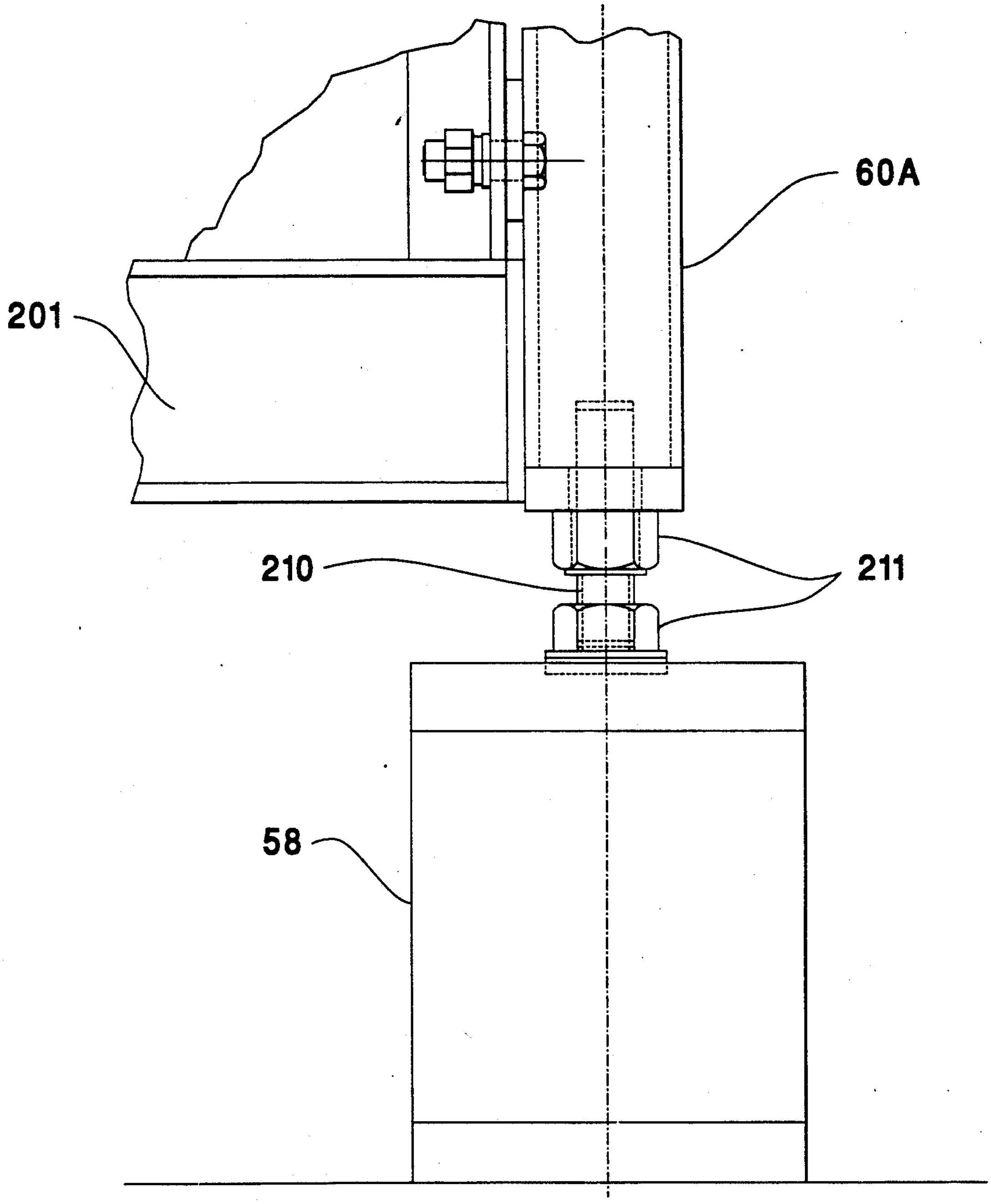

FIG. 1A

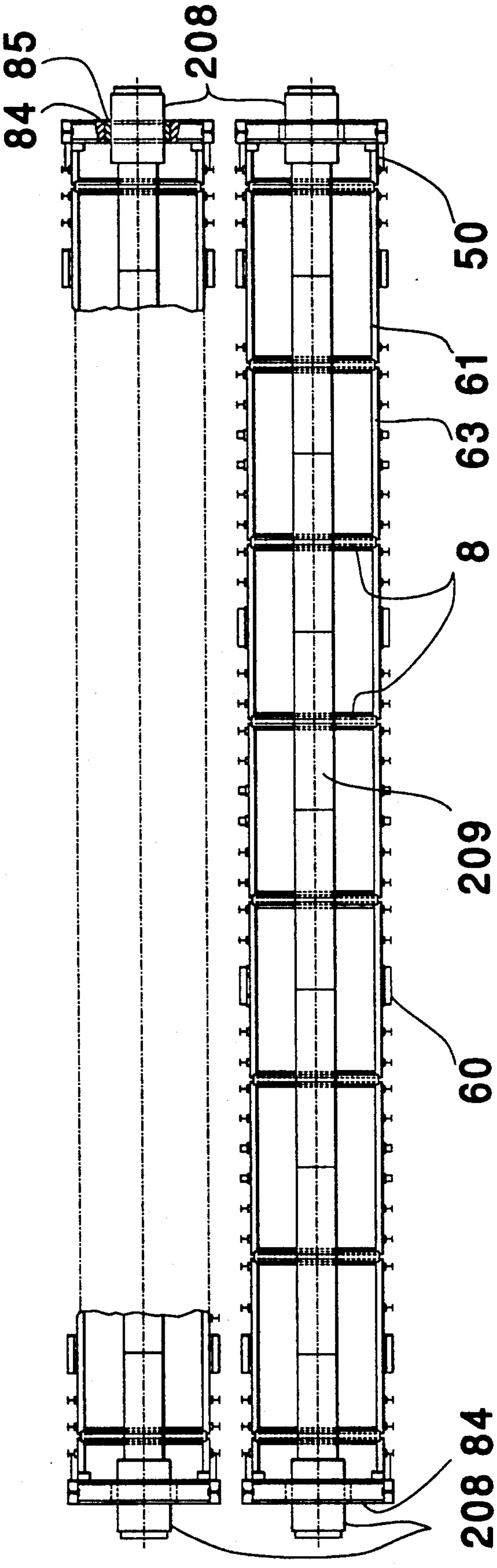

FIG. 2

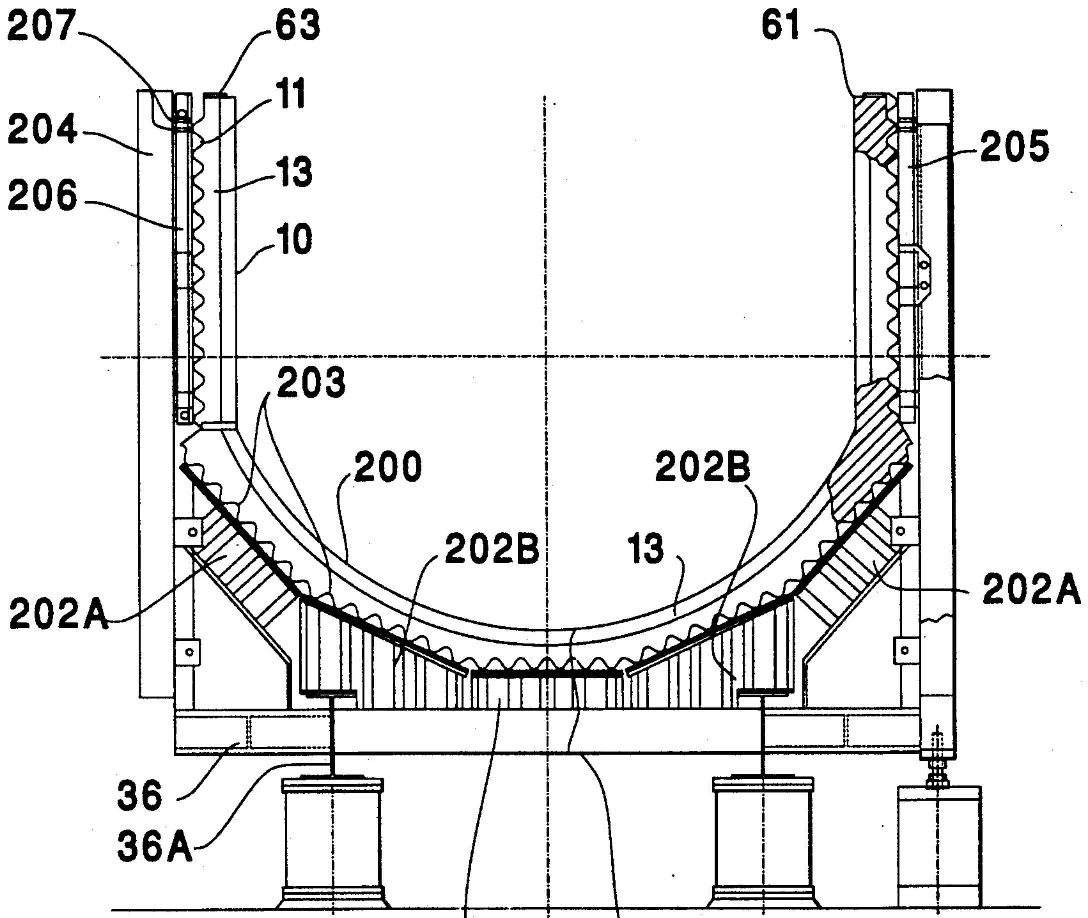
207
63
61
11
204
205
13
206
10
203
200
202B
202B
13
202A
202A
36
36A
202C
201

FIG. 3

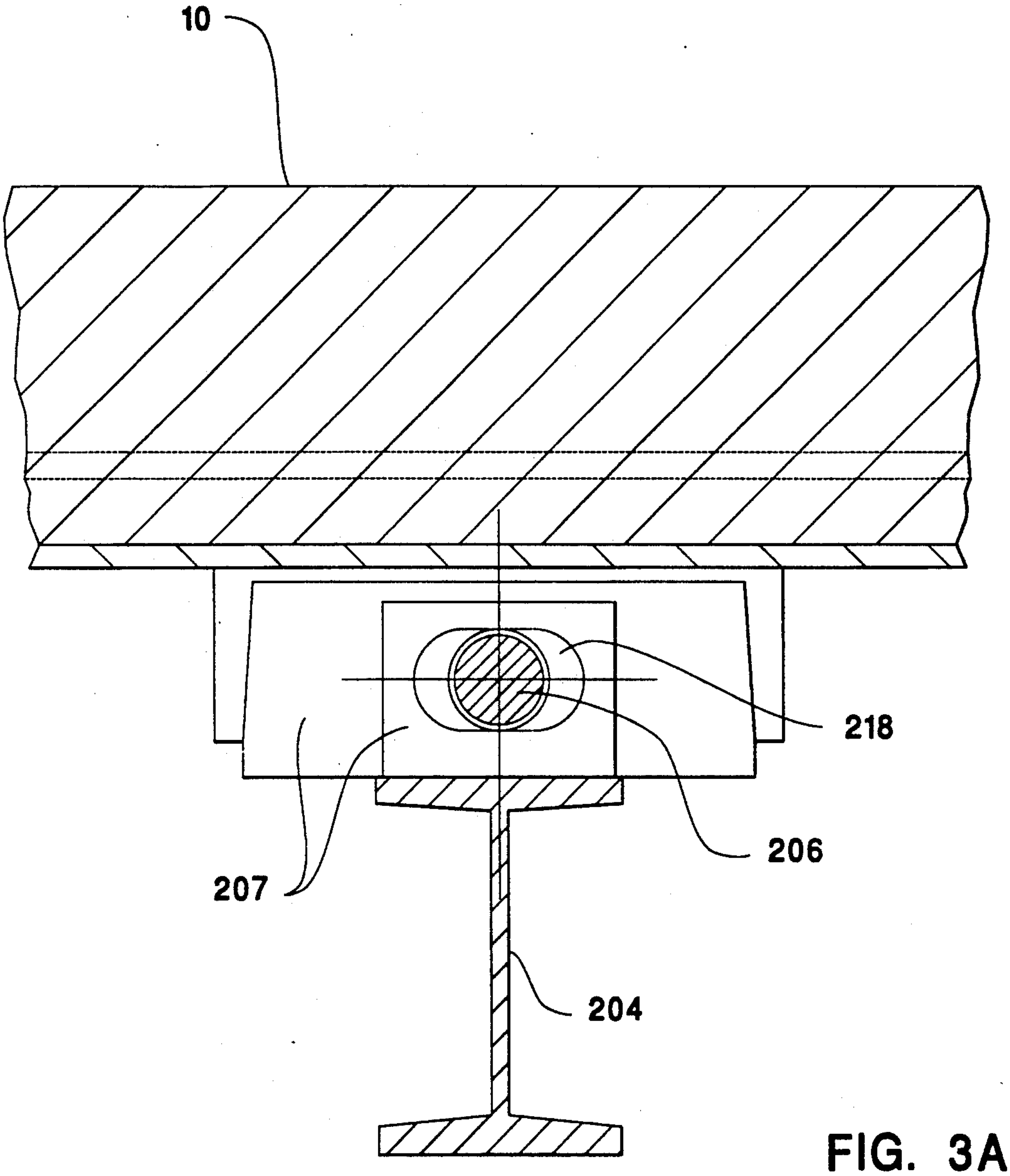

FIG. 3A

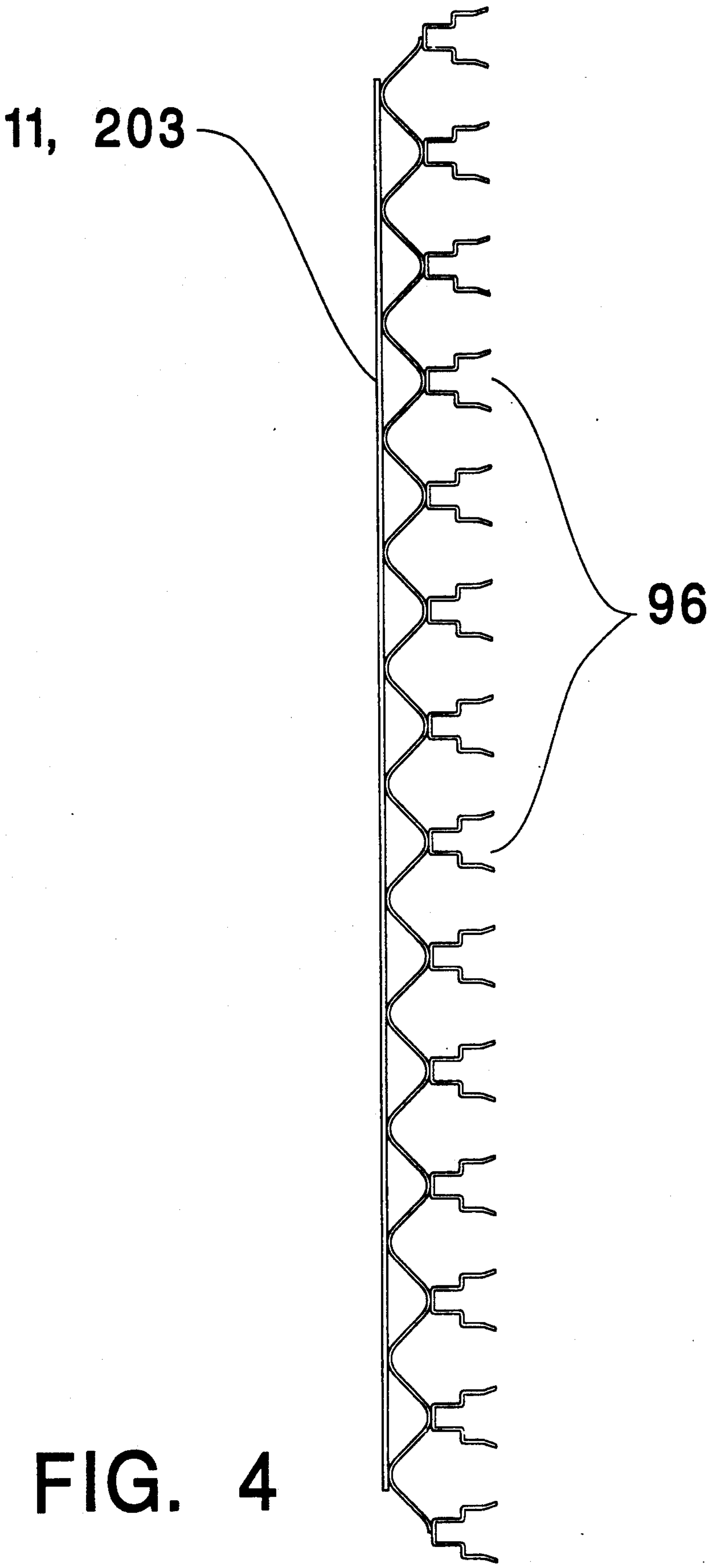

FIG. 4

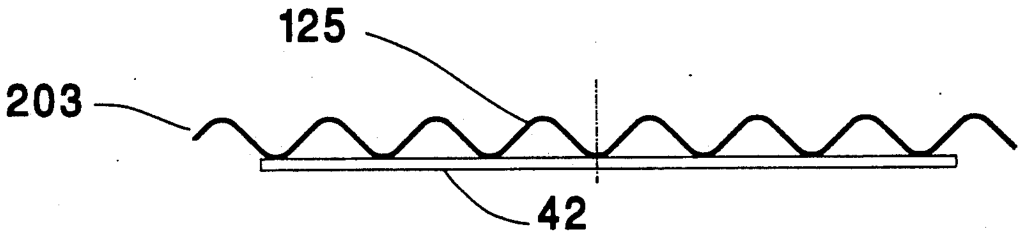

FIG. 5

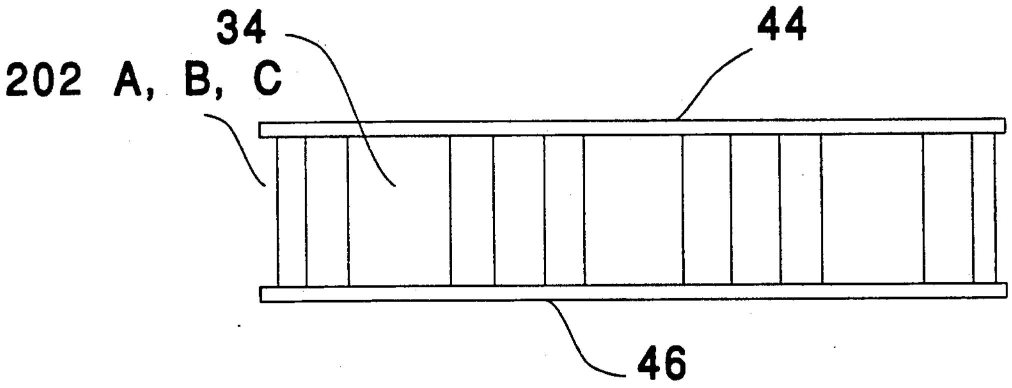

FIG. 6

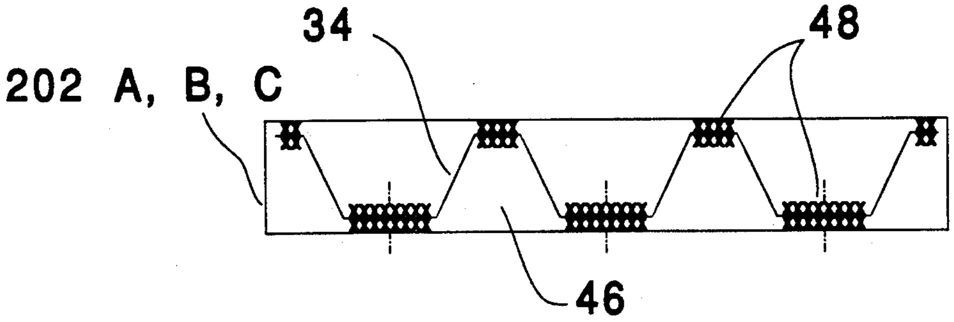

FIG. 7

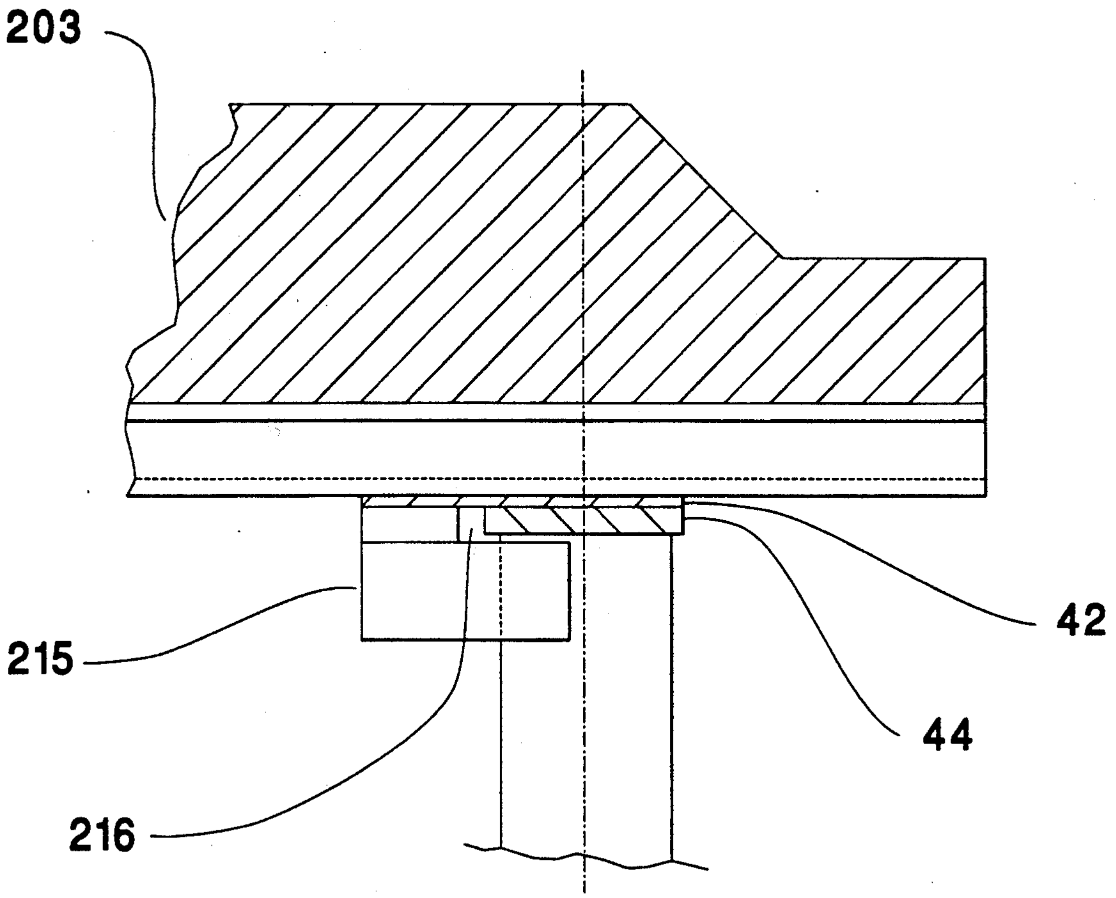

FIG. 7A

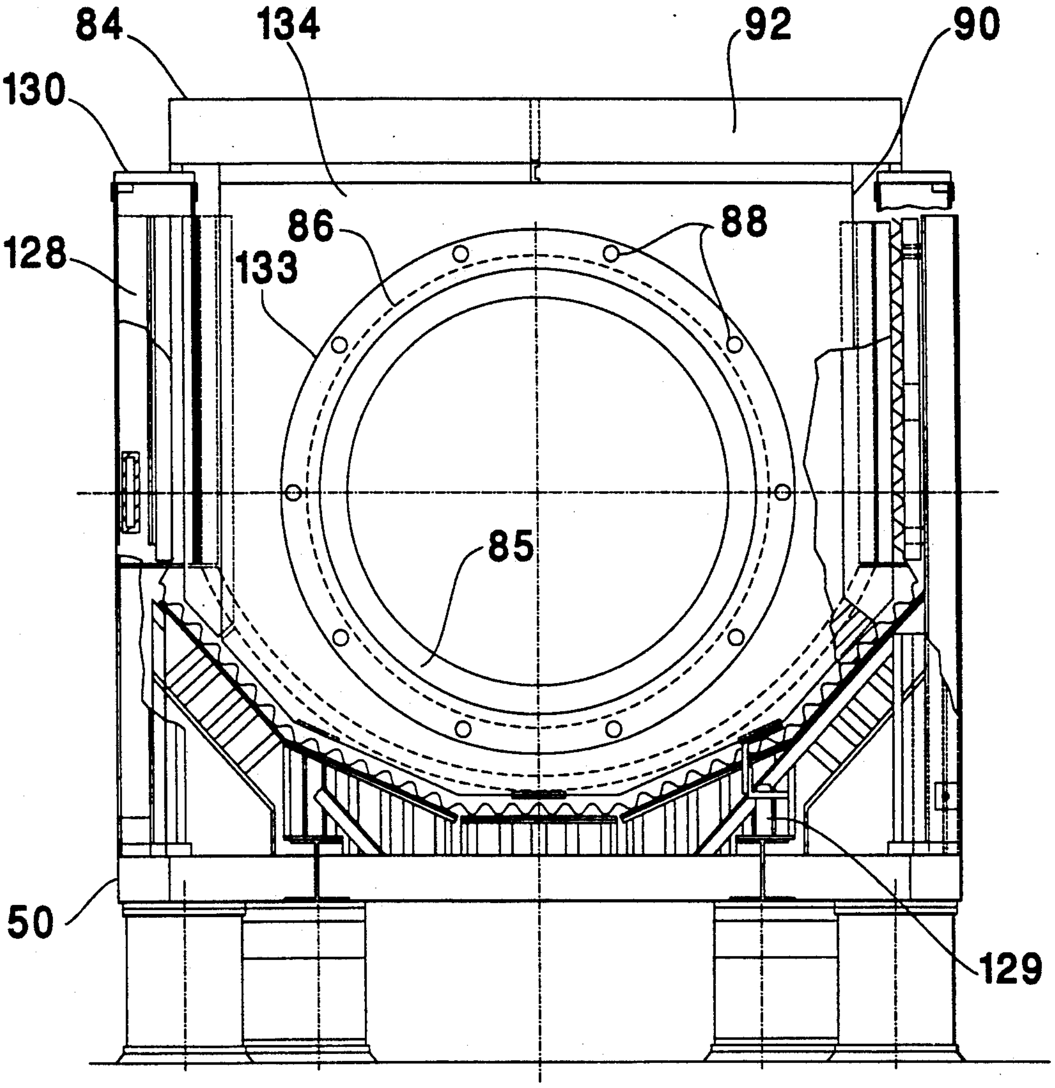

FIG. 8

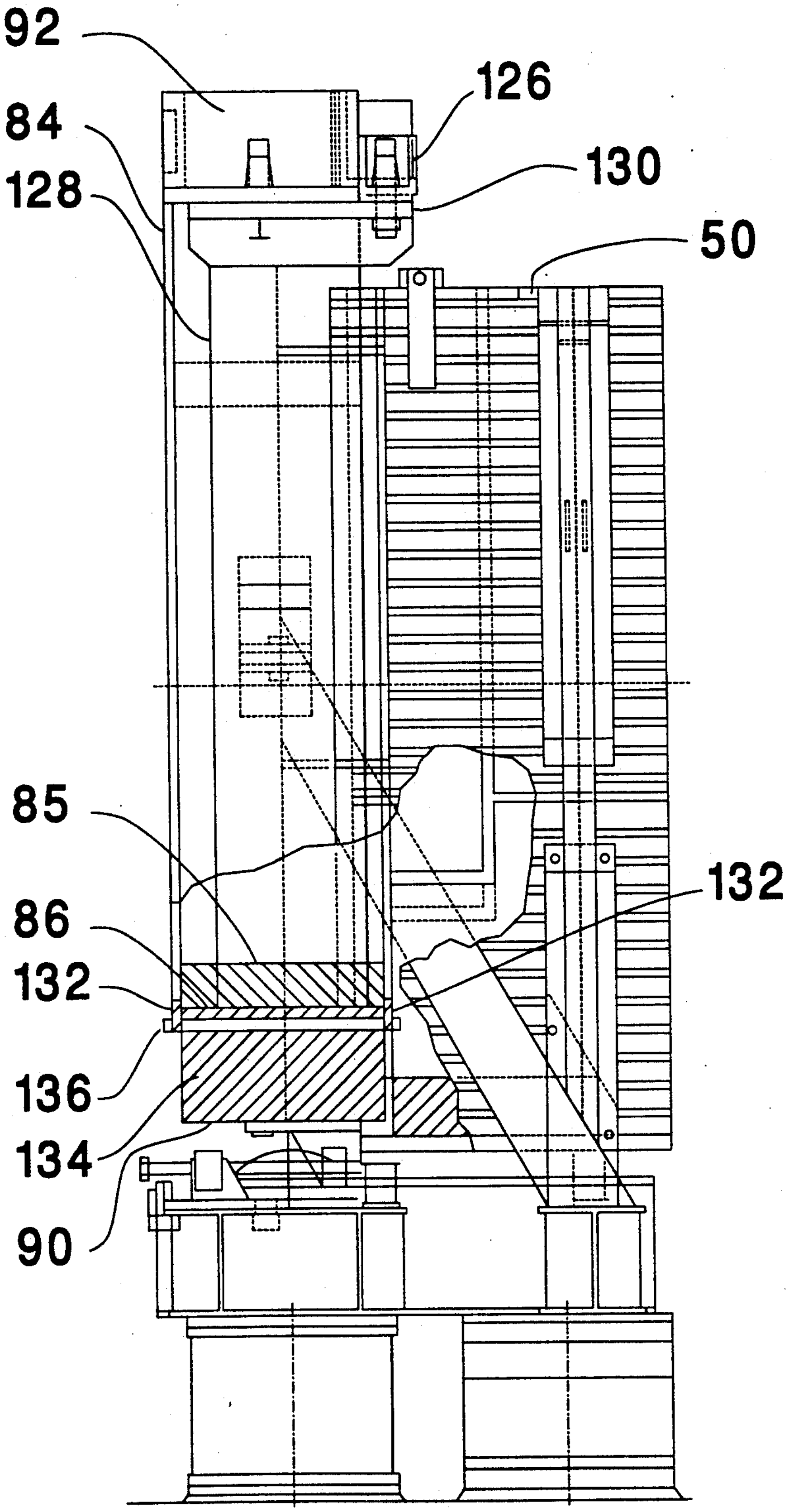

FIG. 8A

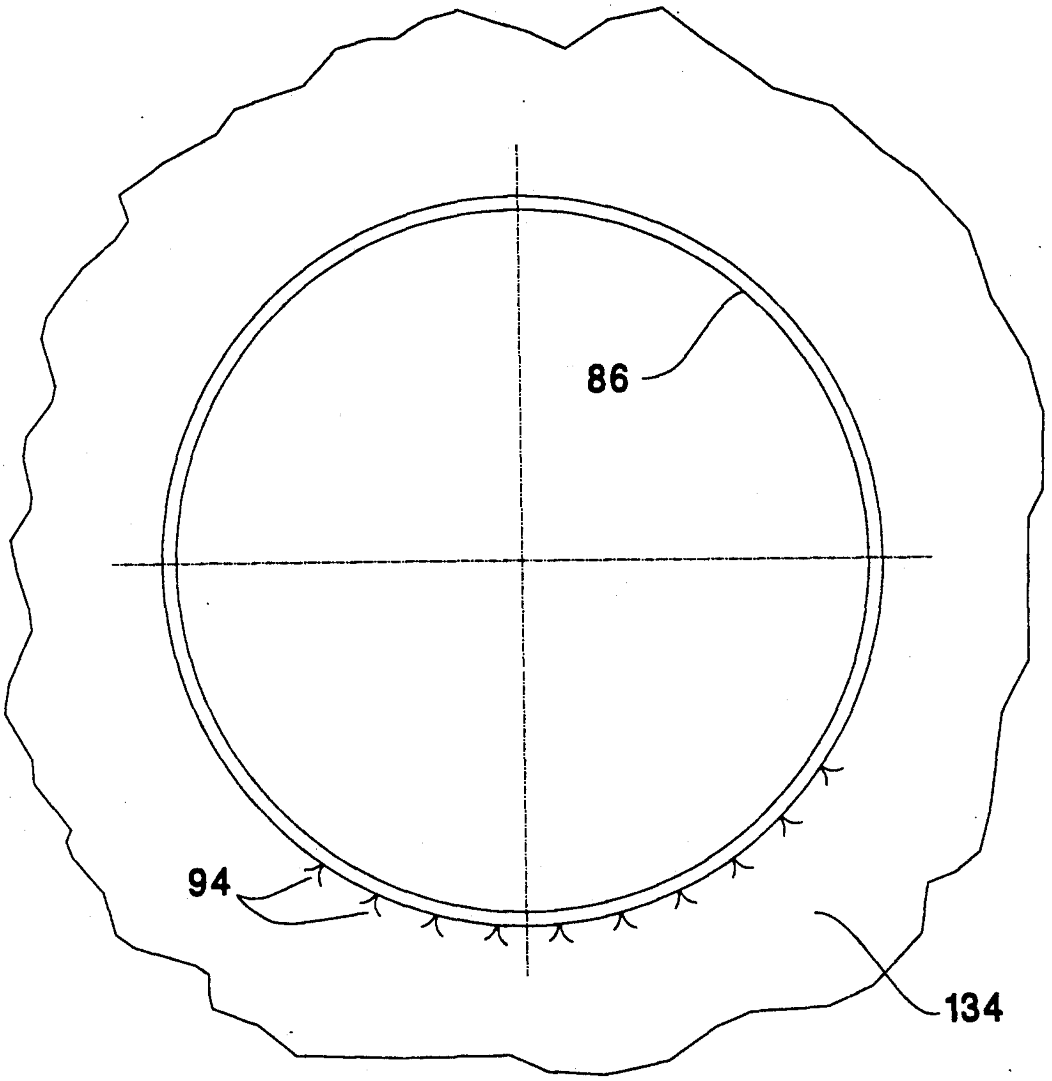

FIG. 9

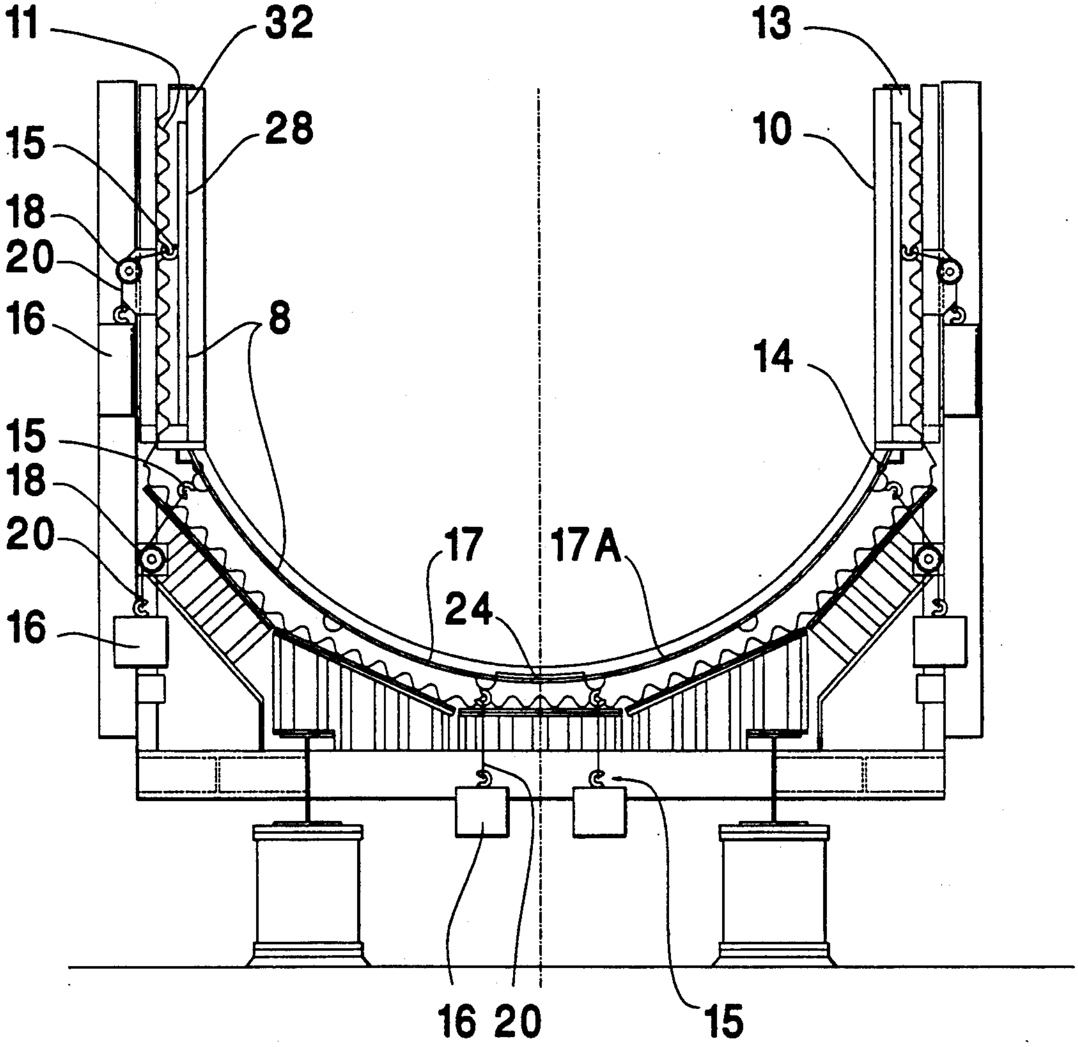

FIG. 10

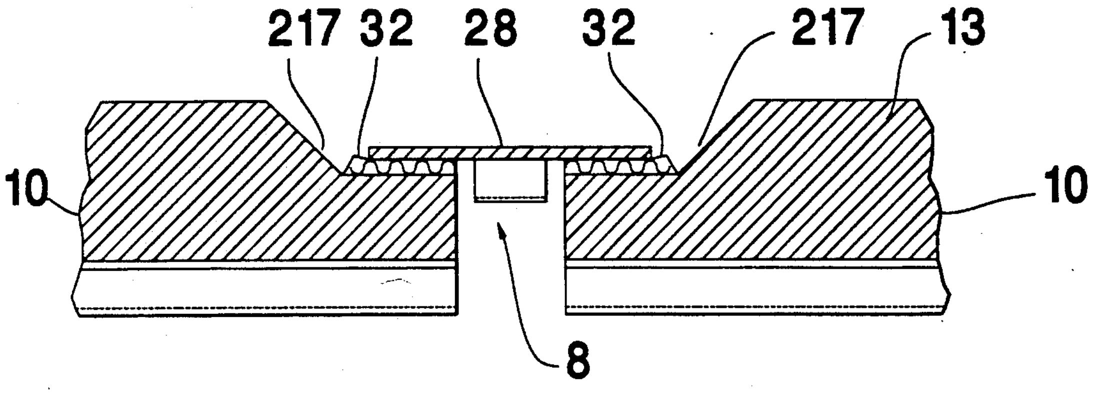

FIG. 11

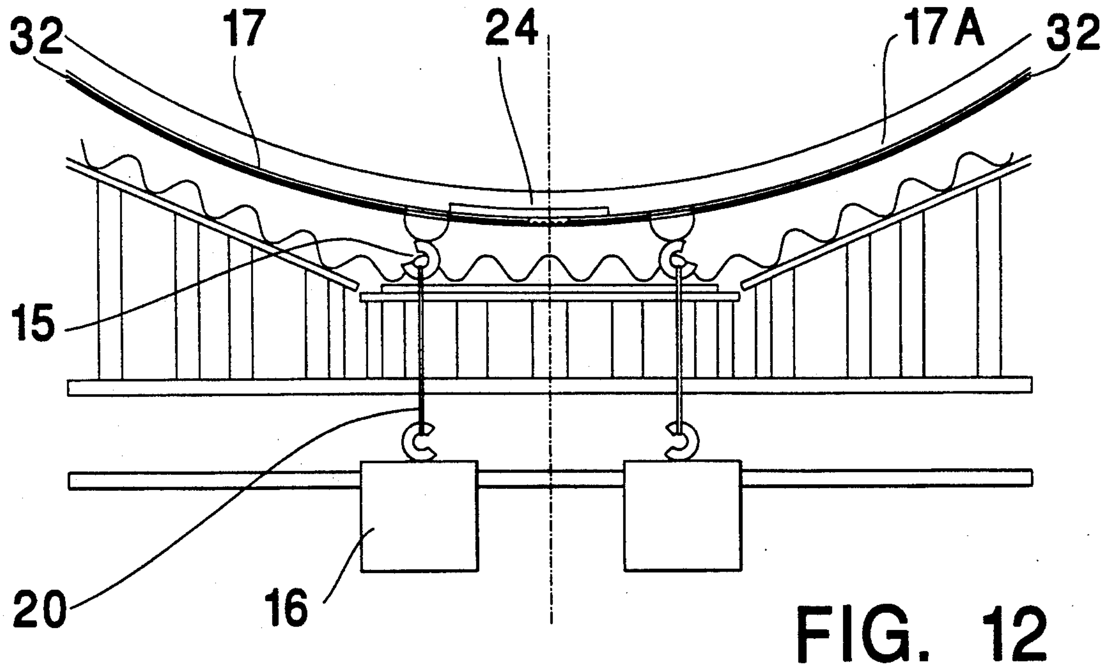

FIG. 12

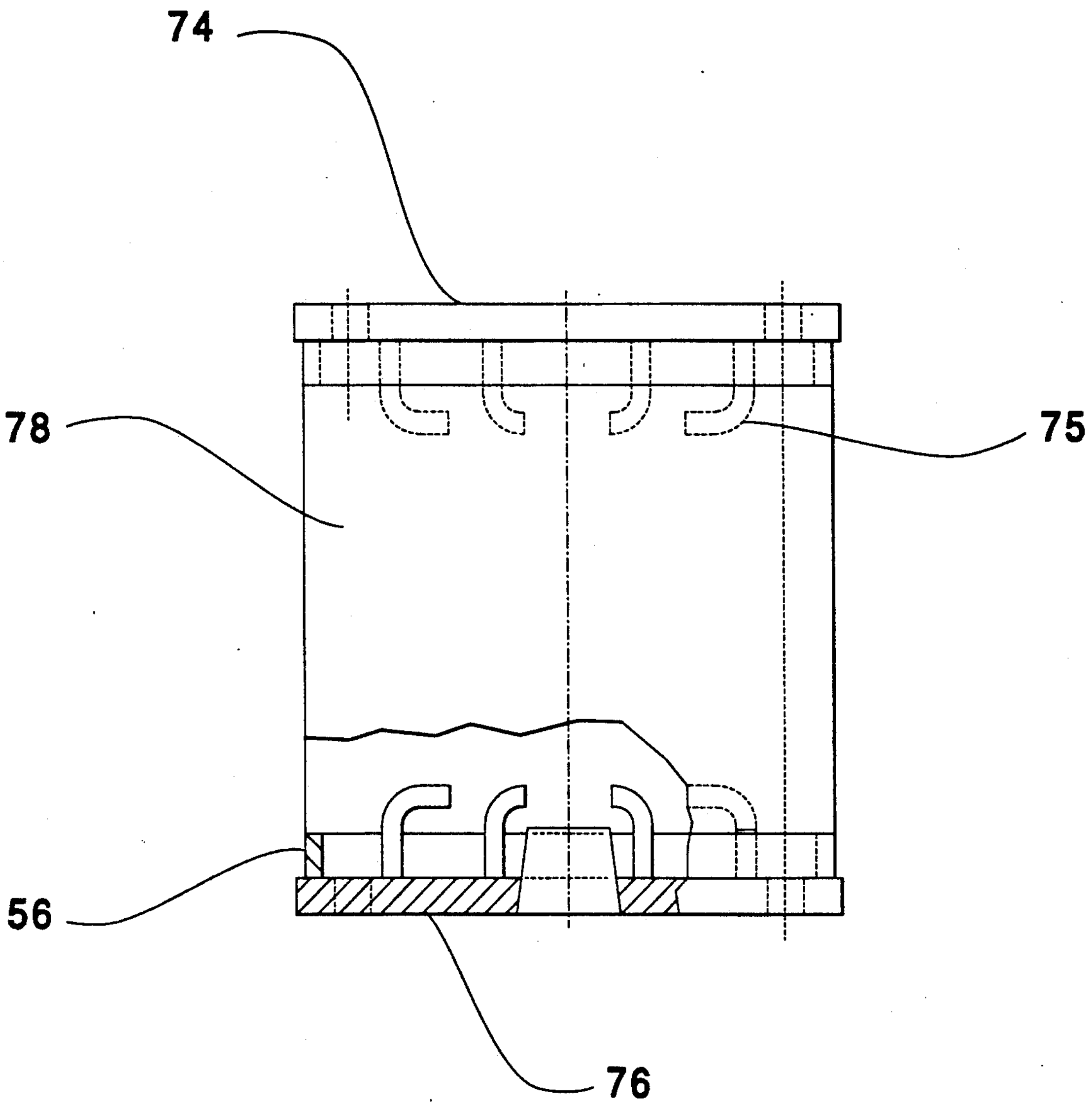

FIG. 13

GRAPHITIZATION FURNACE

BACKGROUND OF THE INVENTION

The invention relates to a method and apparatus for carrying out the production of graphite electrodes and other graphitized bodies. A great variety of electrochemical and metallurgical processes are carried out with the use of carbon and graphite electrodes. In this context it should be understood that the word carbon denotes the amorphous form of carbon and graphite denotes the multilayered hexagonal crystalline form of carbon.

Carbon and graphite electrodes are used in many electrochemical processes, including the production of magnesium, chlorine, iodine, phosphorus, steel, and the production of aluminum in Hall cells.

Carbon electrodes consist of the essentially amorphous carbon from petroleum coke which has been calcined, ground, classified by size, mixed with a binder, and bound in a matrix of amorphous carbon derived from the binder after baking at temperatures of approximately 700° C. to 1100° C. in a baking furnace. Graphite electrodes are produced from the carbon forms by placing them in an Acheson furnace and in recent years in a Lengthwise Graphitization (LWG) type furnace and heating them to a temperature between 2500° C. to 3000° C., which converts the amorphous form of carbon to the crystalline graphite, and vaporizes most of the impurities present in the original carbon, including most metals and sulfur compounds. Graphite, compared to amorphous carbon has much higher electrical and thermal conductivity, lower coefficient of thermal expansion (CTE), superior ductility and vastly superior thermal shock resistance at the operating temperatures of the electric arc steel furnace. These physical properties are uniquely valuable in the electric furnace with its need for high electrical currents, and the need to resist the mechanical and thermal shock suffered by the electrodes from the falling scrap, fluctuations in metal and electrode level, and generally high thermal stresses. Consequently, graphite is universally used as an electrode in the electric arc melting of steel.

The production of graphite electrodes from the so-called carbon electrodes had traditionally been carried out in the Acheson furnace in which the electrodes are typically placed in a transverse orientation to the flow of the electrical current, and surrounded by a resistor medium, thereby causing the current to pass alternately through tiers of electrodes and resistor media, the latter being typically metallurgical or petroleum coke. The Acheson process is of such ancient vintage and so well known as not to require any further description. The LWG process, although very old, is less well known and has been practiced on a commercial scale only in recent years. The LWG process is carried out by arranging the carbon electrodes in a continuous column with an electrical connection at each end of the column. See U.S. Pat. No. 1,029,121 Heroult, Cl. 13/7 Jun. 11, 1912 and U.S. Pat. No. 4,015,068, Vohler, Mar. 29, 1977, Cl. 13/7. In the LWG process, the electrodes themselves form the dominant path for the heating current, with one or both of the ends of the column subjected to a mechanical or hydrostatic pressure source in order to keep the connection tight under expansion or contraction of the column during the heating cycle. A packing medium of granular coke is used for insulation, however, Vohler does not use a packing medium, but discloses a metal shell with a felt liner as insulation.

The LWG process has many advantages over the Acheson process. The energy efficiency is much higher, as the material is heated directly instead of indirectly, and the cycle time for the process is much faster taking typically less than 12 hours as compared to 60 to 120 hours for the Acheson process.

U.S. Pat. No. 4,394,766 issued Jul. 19, 1983 describes an LWG furnace and U.S. Pat. No. 4,475,207 describes a loading apparatus for such a furnace, referred to herein as a strongback.

SUMMARY OF THE INVENTION

An improved LWG furnace of modular design comprising roughly semi-circular shell coupled by expansion joints in which a pressure seal is held in place by deadweights. The shell is formed of corrugated steel panels with castable ceramic lining. The panel design allows more freedom for thermal expansion in the transverse direction while accommodating longitudinal expansion by freedom to slide over its support cradle. The corrugated panel design also enhances faster cooling of the furnace after off-fire by improved heat transfer in comparison to a simple steel plate structure. The corrugated structure has a higher surface area than a simple plate, which gives more radiative cooling and turbulent air movement giving more convective cooling.

At each end of the furnace there is a head wall assembly through which power is brought by a contact electrode, through a castable refractory which is removed mechanically when repairs are made.

The modular system of construction lends itself to volume production and dimensionally, highly accurate fabrication thus enhancing complete interchangeability of the furnace shell modules.

The shell system may have bottom ports for bottom-dump type unloading of the graphitization media or may use vacuum or mechanical unloading.

The refractory lined metal panels coupled with ceramic gasketed suspension joints render the furnace relatively gas tight, making the containment and collection of gaseous or particulate pollutants either by a vented cover or hood relatively simple, for easy and effective environmental control of these pollutants.

This furnace has a low heat capacity in contrast to all refractory block furnaces and also has a much faster cooling rate after off-fire due to the additional surface area and convective cooling produced by the corrugated panel shell. This allows the furnace to cool down faster than older designs after the amorphous carbon electrodes are converted to graphite, and the electrodes removed. This faster cooling provides a quicker turnaround time and increased production speed and capacity.

We have also found that our furnace produces higher quality electrodes than previous designs, due to its mechanical and thermal stability, and the consequent uniformity and controllability of the graphitization conditions.

The furnace has great structural and thermal stability which gives it a long useful life and makes it suitable for stationary as well as movable furnace applications. The unique combination of castable refractory lining integrated with the corrugated steel of suitable gauge thickness by means of welded wire anchors provides a sturdy composite structure analogous to reinforced concrete beams or slabs; where imposed horizontal and downward loads within the furnace result in compressive stresses within the refractory linings and tensilly stressing the steel corrugation. Use of the corrugated steel panels and corrugated steel support modules also serves to accommodate differential movement caused by thermal expansion at elevated temperatures and contraction during cool down without warping or permanent deformation.

The head walls of the furnace are also of modular design, suspended and stabilized by structural members incorporated into the end shell design.

The furnace is loaded by means of a strongback carrying a preloaded column of carbon electrodes. The strongback is supported on truss assemblies which are accurately positioned by and secured to the structure of the main shell assemblies, with provision to transmit the strongback load directly to ground thru an electrically isolated pier arrangement.

The side panel sections are held in place by a structurally stable bracket arrangement which allows thermal movement and easy replacement.

The electrodes at the ends may have current spreaders holding the electrode strings under pressure while applying current, which allows for twin or multiple stranding of electrode columns.

Each shell section consists of multiple panels comprising conventional corrugated steel sheets lined with castable refractory. Welded anchors hold the castable refractory secure to the corrugation.

The head wall assembly is adjustable for accurate alignment and keyed to the end shell assembly with brackets for stability.

The rigid structure of this furnace design may be built in any geometric configuration, in contrast to the structure shown in U.S. Pat. No. 4,394,766, which has the furnace structure suspended in tension, which limits the configuration to that of a relatively narrow and deeper "U" shaped cross-section.

SUMMARY OF THE INVENTION

A bed of particulate coke medium is placed in the bottom of the furnace and a string of baked amorphous carbon electrodes placed on the bed between the two head electrodes by a strongback precisely positioned on the furnace. The furnace is filled with coke medium and pressure and current applied to the string. After the electrode string is graphitized, the current is turned off and the furnace allowed to cool and be unloaded.

BRIEF DESCRIPTION OF THE PREFERRED EMBODIMENTS.

FIG. **1** is an elevation section of the furnace in accordance with the invention.

FIG. **1A** is a perspective view of the supporting section in accordance with the invention.

FIG. **2** is a plan view of the furnace in accordance with the invention.

FIG. **3** is a vertical cross-section of the furnace in accordance with the invention.

FIG. **3A** is a perspective view for the bottom arrangement of the furnace in accordance with the invention.

FIG. **4** is a perspective view of the refractory anchors in accordance with the invention.

FIG. **5** is an end view of the corrugated steel bottom panels in accordance with the invention.

FIG. **6** is a side view of the corrugated support modules in accordance with the invention.

FIG. **7** is a cross-sectional view of the support modules.

FIG. **7A** is a cross-sectional view of a hold-down bracket in accordance with the invention.

FIG. **8** and **8A** are perspective views of the head wall assembly in accordance with the invention.

FIG. **9** is a perspective view for the liner of the end shell assembly in accordance with the invention.

FIG. **10** is a vertical section view of the furnace with an expansion joint in accordance with the invention.

FIG. **11** is a cross-sectional view of the side expansion joint.

FIG. **12** is a detail of the bottom joint.

FIG. **13** is a sectional view of the piers in accordance with the invention.

DESCRIPTION OF THE DRAWINGS

FIG. **1** is an elevation section of the furnace with main shell assemblies **61** and **63** and end shell assembly **50** supported by refractory piers **56** for electrical isolation. Head electrodes **208** supported by head electrode bushing **85** and head wall **84**, apply pressure and current to the electrode column **209** converting carbon to graphite.

Expansion joints **8** serve to couple adjacent furnace shell assemblies to retain the granular insulating media (not shown), to accommodate relative thermal movements, as well as assure electrical isolation between adjacent shells.

The furnace is loaded by strongback, not shown, supported and aligned on support bar **60** and support truss assembly **60A** which are attached to the structural frame **201** of the furnace. FIG. **1A** (**3891**) shows refractory piers **58** and a threaded rod **210** and nuts **211** which transmit the load of the strongback to ground through the electrical isolation of piers **58**.

FIG. **2** is a plan view of the furnace.

FIG. **3** is a vertical cross-section of the furnace through a main shell assembly **61** or **63** with furnace bed section **200** and side panel assemblies **10**, which are independent and easily removable for replacement. Furnace bed sections **200** comprising corrugated steel bottom panels **203** are lined with castable refractory **13**. Corrugated steel bottom panels **203** are supported by structural frame **201** comprising I-beams **36**, **36A** and weldments, and vertically corrugated support modules **202A**, **202B** and **202C**. Side panel assemblies **10** of corrugated steel sheets **11**, stiffener brackets **205** and castable refractory **13**, are supported by furnace bed **200** and stabilized by vertical steel members **204** by means of coupling rods **206** and coupling tabs **207**.

FIG. **3A** shows clearance gap **218** between coupling rods **206** and tabs **207**, designed to provide for differential expansion between side panel assemblies **10** and vertical steel members **204** of the furnace. The unique arrangement of corrugated steel panels **203** and corrugated steel sheets **11** causes increased air turbulence and provides increased surface area over a flat surface; which increases heat transfer by convection and radiation, and also serves to provide better mechanical stability to withstand hydrostatic pressures from the furnace packing media while allowing for relative thermal expansion at elevated temperatures.

FIG. **4** shows refractory anchors **96** welded to corrugated sheet panels **11** and **203**.

FIG. **5** is an end view of corrugated steel bottom panels **203** comprising corrugated sheets **125** welded to backup bars **42**.

FIG. 6 shows a side view of corrugated support modules 202 A, B and C comprising vertical corrugations 34 welded to steel support bars 44 and 46.

FIG. 7 shows a cross-sectional view of support modules 202 A, B and C comprising corrugation 34 and bottom support bar 46. The corrugation 34 has ample cross-sectional area to support the contents and live loads imposed on the furnace, and sufficient section modulus to resist the stresses of thermal expansion and contraction, as well as the bending moments imposed by the sliding friction of the corrugated steel panels 203.

The trapezoidal cross-section of the corrugation provides for the required welding pattern 48 to resist the thermal and bending stresses described above. The top support bar 44 has the same welding pattern as the bottom support bar 46. The arrangement of support modules 202 A, B and C, FIG. 3, forms a cradle which is the key for the structural support of the corrugated steel panels 203 and the backing and stable support of the castable refractory 13 for the bottom section of the furnace.

FIG. 7A shows a cross-section of a hold-down bracket for bottom panels 203. Bracket 215 holds panels 203 in sliding contact between top support bar 44 and backup bar 42 while allowing for thermal movement at 216.

FIGS. 8 and 8A show the replaceable head wall assembly 84 of castable refractory, with thin S.S. liner 86 and bolt holes 88 which allow bolting 136 of plates 132 to hold the replaceable head electrode bushing 85 in position. The head wall castable, 134 is contained by exterior plate 90 and is suspended from cross beam 92. The head wall assembly 84 is held in place by tapered pin assemblies 126 and 129 with the load bearing member 92 supported on column 128 and top plate 130 of end shell assembly 50. Replaceable head electrode bushing 85 allows the head electrode movement.

End shell assembly 50 is similar to main shell assemblies 61 and 63 except for the head wall structural support members 128 and 130.

FIG. 9 shows liner 86 of the end shell assembly bonded to head wall refractory 134 by Welded wire anchors 94.

FIG. 10 is a vertical section of the furnace at an expansion joint 8 showing side panel assemblies 10 having corrugated steel sheet 11 lined with castable refractory 13. Stainless Steel side plates 28 with ceramic wool gasketing seals 32 covering the expansion joints are held in place by deadweights 16. Electrical continuity between shells is prevented by the joints. The plates are held in place by deadweights on cables 20 running over porcelain spools 18 to hooks 15. Side plates 28 are joined to bottom curved plates 17 and 17A by means of high temperature alloy bolt arrangement 14. The overlap of bottom plates 17 and 17A at 24 forms a sliding joint held in place by deadweights 16.

FIG. 11 shows a cross-section of the side expansion joint 8 with castable refractory 13, stainless steel plate 28 and ceramic wool gasket 32 held in place in refractory nest 217.

FIG. 12 is a detail of bottom joint with overlapping plates 17 and 17A at 24 ceramic wool gasket 32, and deadweights 16 holding the plates in contact while allowing for thermal movement.

FIG. 13 shows piers 56 with castable refractory 78, upper plate 74, lower plate 76 and reinforcing anchors 75 welded to upper and lower plates. These piers serve to provide electrical isolation from the furnace shells to

ground while supporting the entire weight of the furnace and its contents.

We claim:

1. A graphitization furnace for the length-wise graphitization of a column of amorphous cylindrical carbon electrodes, said furnace comprising a corrugated sheet metal shell having an approximately arc-shaped semicircular lower portion, straight vertical sidewalls and an open top, the whole of said shell having a configuration of a U shaped trough supported by a framework structure on refractory piers, said furnace having at each end head wall structures comprising an end shell, an electrode suitable for supplying sufficient electrical energy to said column to heat said column to a temperature at which said amorphous carbon electrodes are converted to graphite, said furnace shell having its longitudinal axis horizontal to the earth, said refractory piers resting on a foundation on the earth.

2. The furnace as set forth in claim 1, wherein said corrugated sheet metal shell having a cast refractory liner.

3. The furnace as set forth in claim 2, wherein the refractory liner is held in place by metal anchors attached to the shell.

4. The furnace as set forth in claim 1, wherein said corrugated sheet metal further comprising a plurality of horizontally arranged modules having an approximately arc-shaped bottom and vertical sidewalls, said modules define a configuration of a U shaped trough, said modules being joined at side and bottom joints sealed with electrically and thermally insulating ceramic wool gaskets retained by metal plates, said modules having a cast refractory liner held in place by metal anchors attached to the sheet metal shell.

5. The furnace as set forth in claim 4 wherein said corrugated sheet metal shell further having a cast refractory liner held in place by metal anchors attached to the shell and comprising arc-shaped approximately semi-circular bottom and vertical side horizontally arranged modules having side and bottom expansion joints sealed with electrically and thermally insulating ceramic wool gaskets by metal plates wherein side expansion joints are held in contact by counterweights held by cables running over electrically insulating pulleys applying a horizontal force to metal plates covering the joints.

6. The furnace as set forth in claim 4, wherein the bottom of the modules comprises multiple corrugated arc-shaped panels attached to side panels comprising the vertical sidewalls, said arc-shaped panels having a sliding, overlapping, joint sealed with ceramic wool, each of said arc-shaped panels being in the approximate shape of an arc of about 90° having a sliding overlapping expansion joint sealed with ceramic wool, said joint being at the bottom of said furnace shell so as to run parallel with the longitudinal axis of said furnace shell, said arc-shaped panels held in contact at the joint by counterweights.

7. The furnace as set forth in claim 1, wherein said furnace is supported by columns resting on refractory piers, electrically isolating the furnace framework structure from ground.

8. The furnace as set forth in claim 1, wherein said furnace having at each end cast refractory head wall assemblies contained in structurally reinforced metal shells, held in place and attached to the end shells and having an opening for a head electrode supplying elec-

trical power to graphitize the columns of carbon electrodes.

9. The furnace as set forth in claim 4, wherein each module is electrically isolated from each other by ceramic wool gaskets in a refractory nest and from ground by refractory piers, said furnace comprising modules having a corrugated sheet metal shell and a cast refractory liner held in place by metal anchors attached to the shell.

10. The furnace as set forth in claim 1, wherein a truss assembly column is attached to the framework structure of the furnace, and rests on adjustable jacking devices on insulating refractory piers, wherein said column is adapted to support a strongback apparatus for loading the furnace, aid strongback adapted to carry a column of amorphous carbon electrodes in precise end-to-end alignment to the furnace, said strongback being positioned on said column thereby positioning said column in precise alignment between two head electrodes of which one is at each of said furnace, whereby the load of the strongback is directly transmitted from the truss assembly column through said piers to a foundation.

11. The furnace as set forth in claim 4, wherein the bottoms of the furnace modules are comprised of refractory lined corrugated panels supported by support cradles comprising vertical, trapezoidally corrugated support modules welded to upper and lower bars, said support modules having sufficient section modulus to resist the thermal sliding movement of said panels relative to each other caused by thermal expansion and contraction and the stresses of the load caused by the weight of furnace contents, comprising the electrode column and the packing medium and the stress caused by the operations of loading and unloading said furnace.

12. A furnace for heating amorphous cylindrical carbon electrodes to a temperature at which the amorphous carbon is converted to graphite by the application of an electrical current to a horizontal column of said electrodes laid end to end, said furnace comprising a set of U shaped modules having an arc-shaped bottom of approximately 180° and vertical sidewalls, said modules comprising a corrugated sheet metal shell with a cast refractory liner anchored to the shell by wire anchors, said modules forming an elongated horizontal trough with each of said modules isolated electrically and thermally from each other by refractory wool retained by metal plates held in place by counterweights, said furnace having a framework structure supporting said modules in precise alignment resting on refractory piers electrically isolating said furnace from ground, said furnace having at each end an end shell with a case refractory head wall holding an electrode suitable for supply a current to said column sufficient to heat said column to a temperature at which said amorphous carbon electrodes are converted to graphite, said modules supported on support cradle structure at the bottom comprising top and bottom plates joined by trapezoidally corrugated sheet metal, said bottoms of said modules comprising to arc-shaped plates of 90° overlapping at a lowest point sealed with a ceramic wool gasket, thereby allowing limited movement caused by thermal expansion, contraction, and by stress of loading and unloading the furnace, said bottom plates held in contact at said lowest point by counterweights, said overlapping plates forming longitudinal joints in said modules, said framework structure comprising columns resting on adjustable jacking devices resting on refractory piers, said columns adapted to support a strongback structure useful for loading and unloading said electrode column, said modules isolated.

* * * * *

US005351266A

United States Patent [19]

Bullon Camarasa et al.

[11] **Patent Number: 5,351,266**

[45] **Date of Patent: Sep. 27, 1994**

[54] **PROCESS FOR CONTINUOUS MANUFACTURE OF IMPURITY AND IRON-FREE ELECTRODES FOR ELECTRIC ARC FURNACES**

[75] Inventors: **Francisco J. Bullon Camarasa; Juan J. Ropero Beltran; Juan A. Benedit del Burgo,** all of La Coruna, Spain

[73] Assignee: **Ferroatlantica, S.L.,** Madrid, Spain

[21] Appl. No.: **968,517**

[22] Filed: **Oct. 29, 1992**

[30] **Foreign Application Priority Data**

Oct. 30, 1991 [ES] Spain 91 02414

[51] **Int. Cl.**5 .... **H05B 7/09**

[52] **U.S. Cl.** **373/89;** 373/97

[58] **Field of Search** 373/89, 88, 90–92, 373/94, 97–101

[56] **References Cited**

U.S. PATENT DOCUMENTS

1,441,037	1/1923	Soderberg	373/88
1,498,582	6/1924	Soderberg	373/89
1,579,824	4/1926	Laurell	373/89
1,613,212	1/1927	Westly	373/89
1,691,505	11/1928	Walther	373/89
3,524,004	8/1970	Nostran et al.	373/89
3,819,841	6/1974	Persson	373/89
4,575,856	3/1986	Persson	373/89

Primary Examiner—Bruce A. Reynolds
Assistant Examiner—Tu Hoang
Attorney, Agent, or Firm—Dennison, Meserole, Pollack & Scheiner

[57] **ABSTRACT**

An improved process for the continuous manufacture of impurity and iron-free electrodes for electric arc furnaces including a mechanism allowing the replacement of an amorphous coal electrode by a graphite core electrode without extensive furnace shutdown. A dual sliding system is provided which allows an electrode to be continuously baked and provided to the furnace with or without a metal casing and which includes a special contact plate for transmitting electric current which decreases substantially the contact surface of the plate. The process is especially useful for obtaining impurity free elemental silicon.

5 Claims, 4 Drawing Sheets

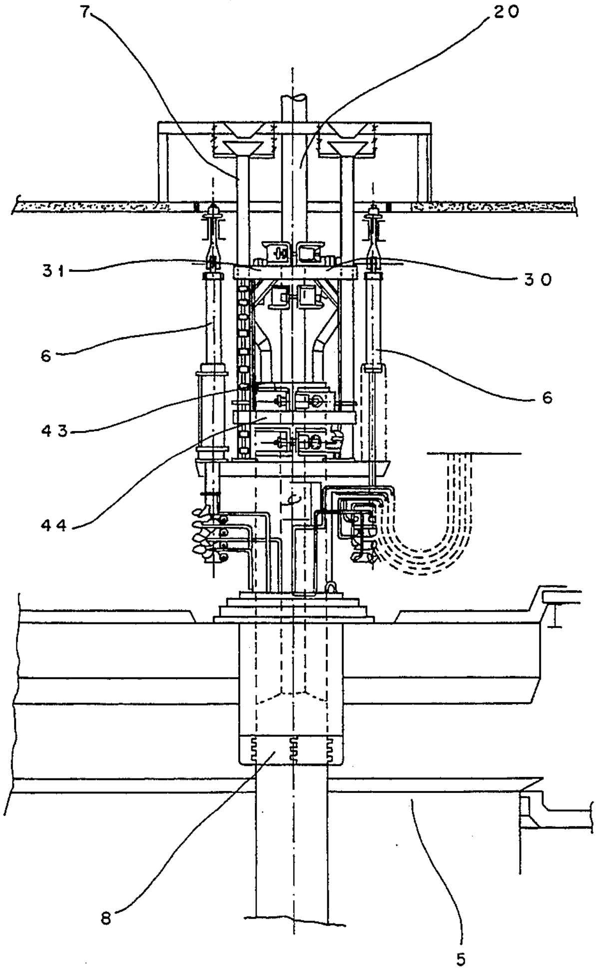

Fig.-1

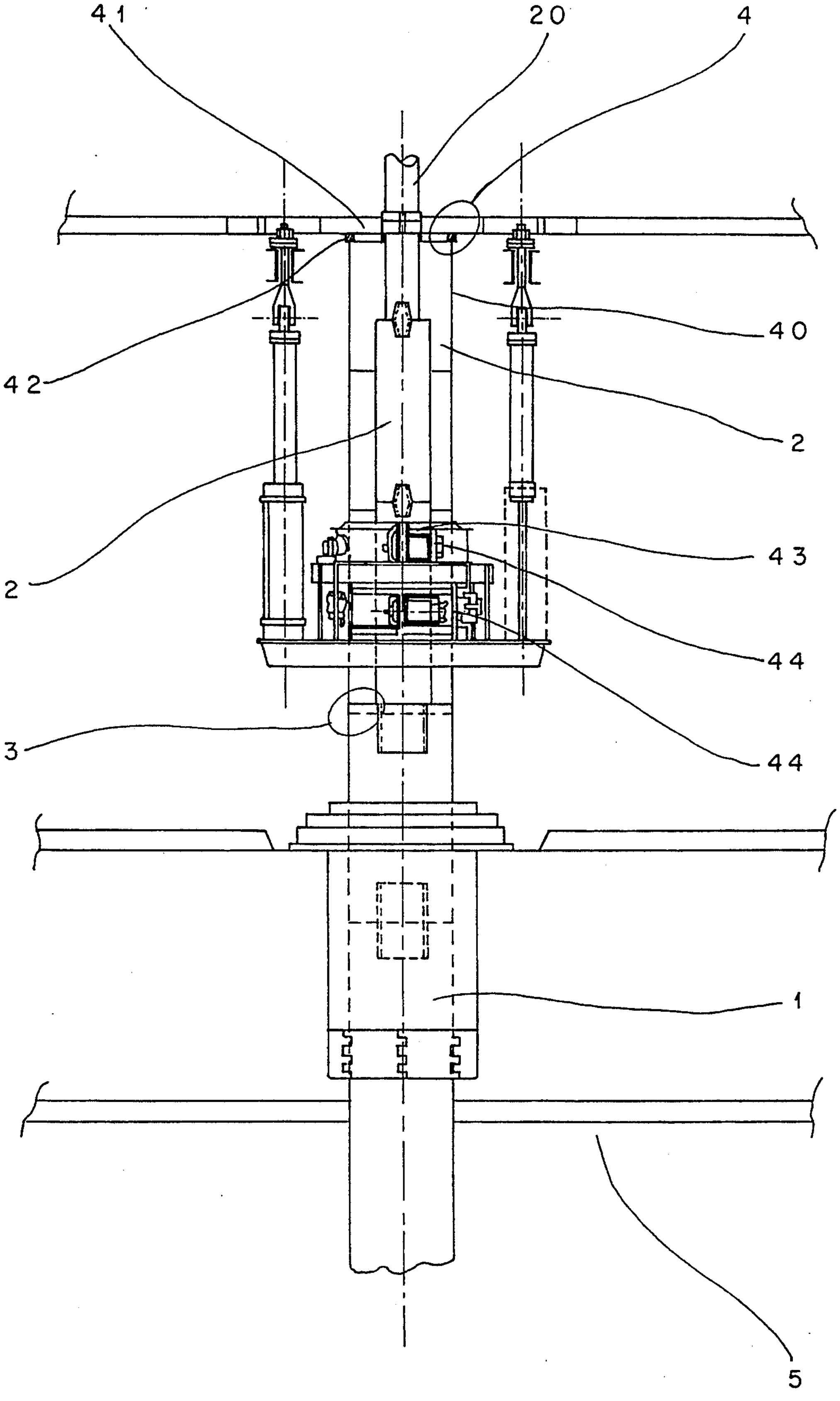

Fig.-2

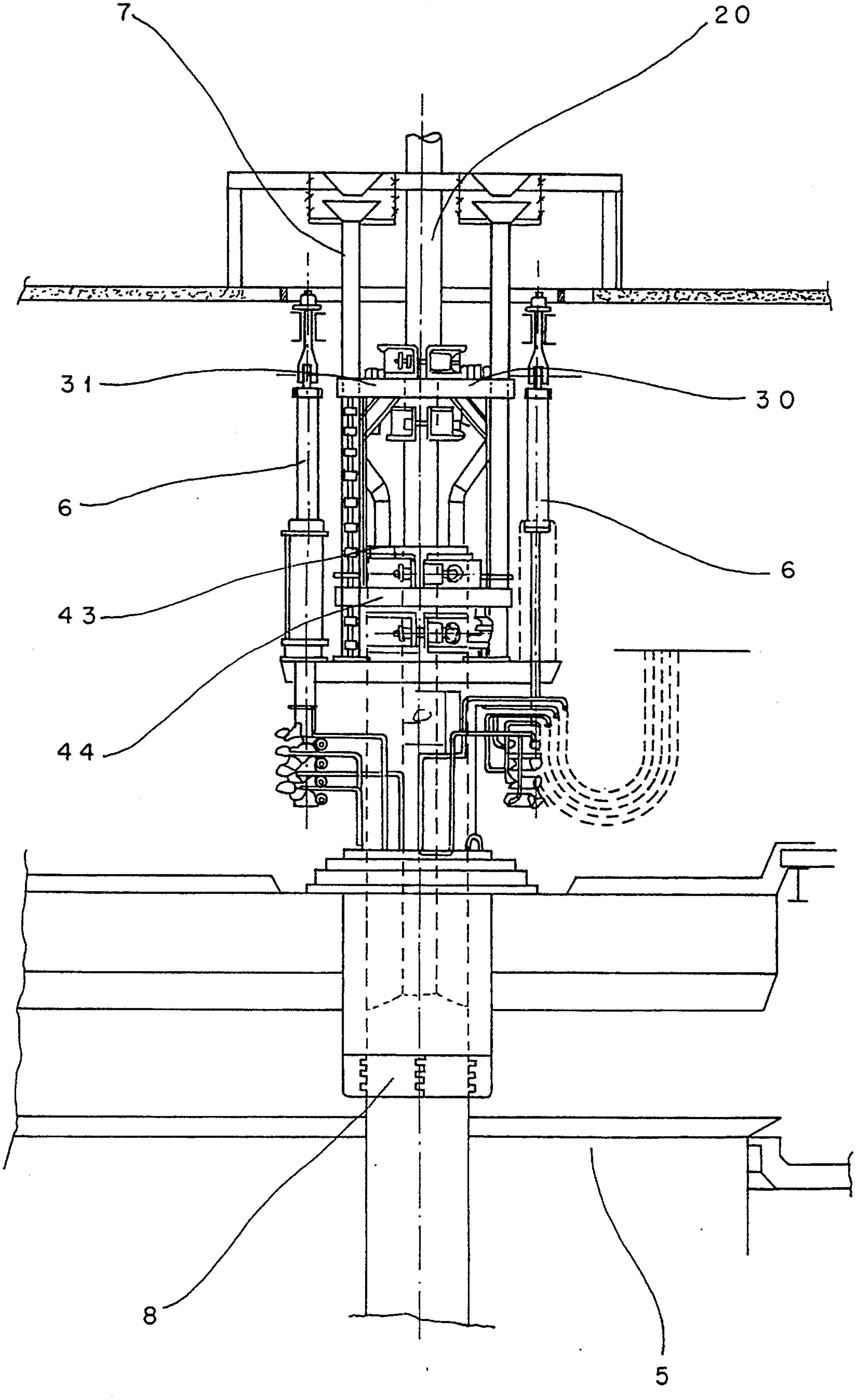

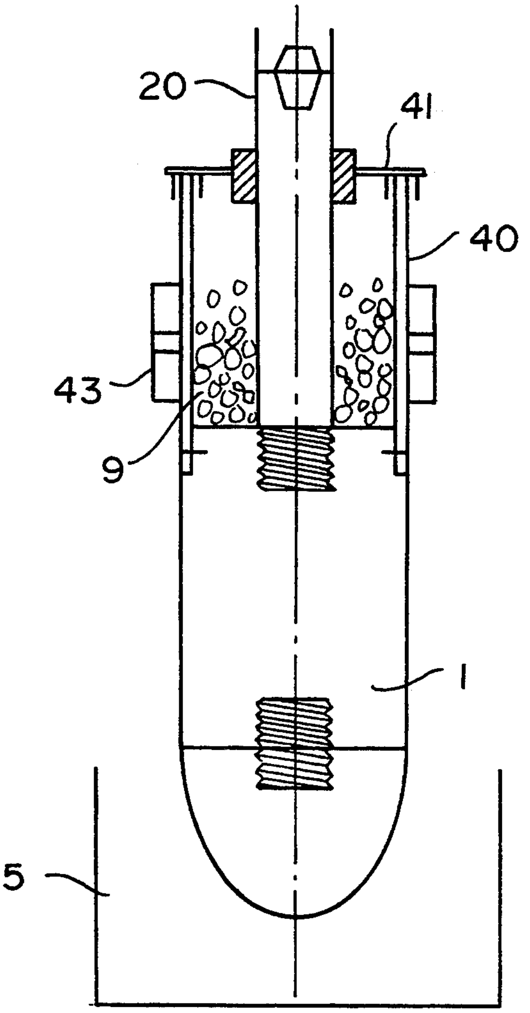

Fig.-2A

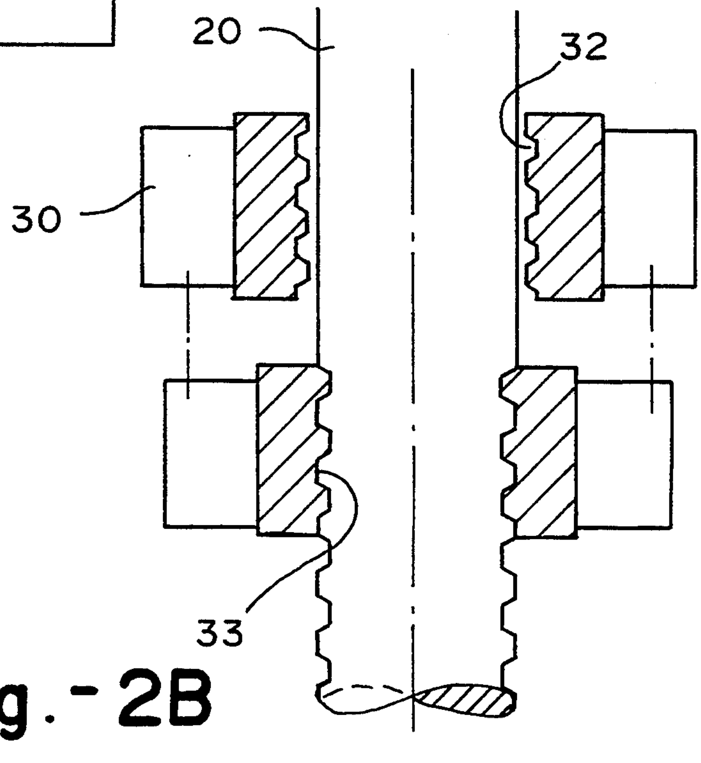

Fig.-2B

Fig.-4

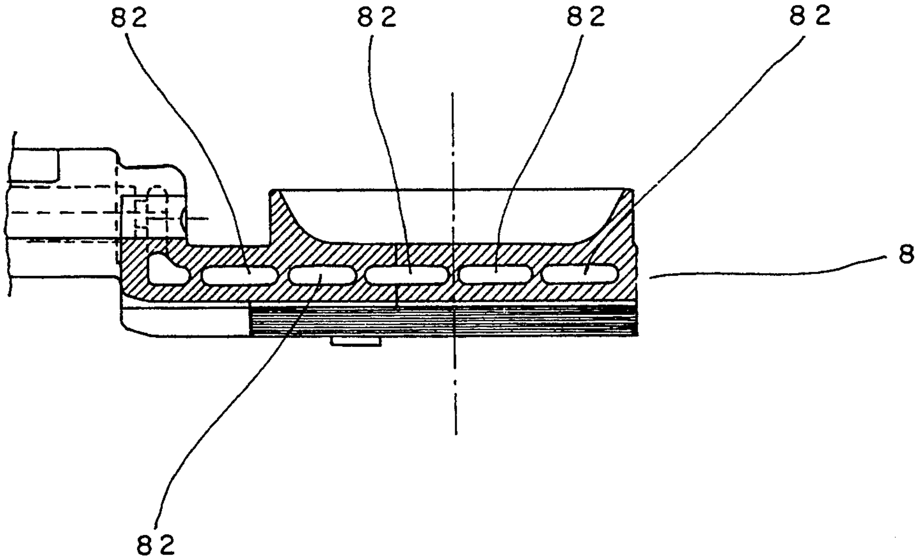

Fig.-3

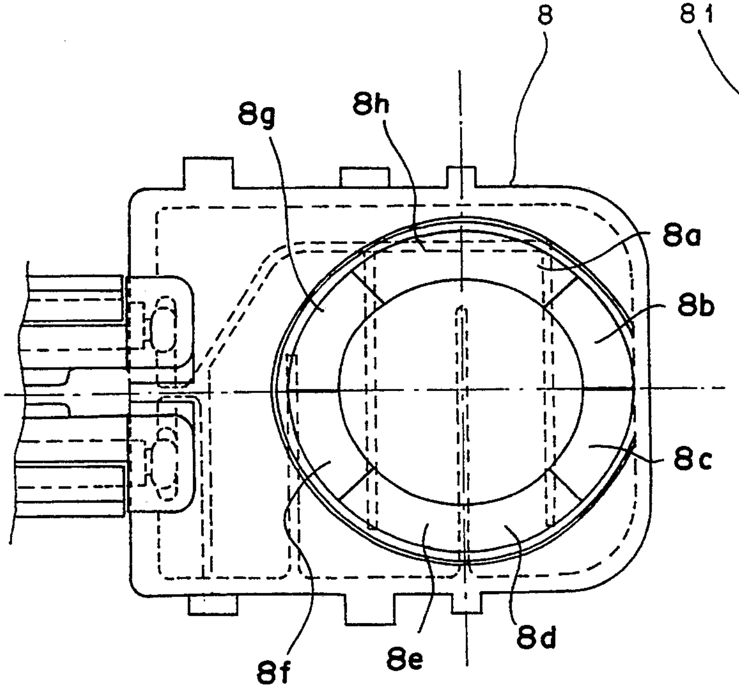

Fig.-5

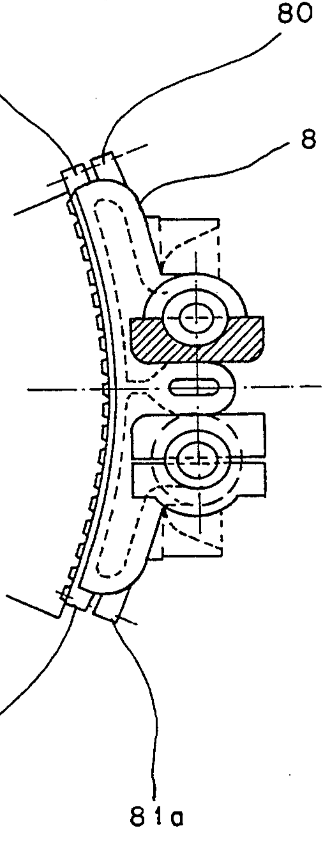

PROCESS FOR CONTINUOUS MANUFACTURE OF IMPURITY AND IRON-FREE ELECTRODES FOR ELECTRIC ARC FURNACES

BACKGROUND OF THE INVENTION

The invention relates to the process for the continuous manufacture of electrodes which are used in electric arc furnaces.

Elemental silicon is obtained in a submerged electric arc furnace by reducing quartz with several classes of coals, according to the simplified reaction $SiO_2+2C\rightarrow Si+2CO$. An arc jumps between the electrode and the furnace sole, which generates the necessary energy to carry out this solid-solid reaction process.

When the electric arc jumps between the electrode and the sole, a gradual and continuous consumption of the electrode is produced, which forms a part of the reaction of the metal production. The electrode gradually moves downward within the furnace, and must be replaced from above by a continuous process in which a SODERBERG paste is introduced into a metal casing to produce a self-baking electrode. In this process, the paste melts, solidifies, slips and burns out.

As the electrode is consumed, the metal casing melts and introduces impurities, particularly iron, into the furnace, making it impossible to manufacture high purity elemental silicon.

An attempt to avoid this problem is disclosed in U.S. Pat. No. 4,575,856, corresponding to Spanish Patent 543259, in which a central core or nucleus made of graphite is used, and replacement of the consumed electrode is made by extrusion through the metal casing so that the casing does not burn out and contaminate. The electrode body is formed from several cylindrical sections which are united at the ends, and the metal casing has flat and uniform sides in its cross-section.

SUMMARY OF THE INVENTION

It is an object of the invention to enable the replacement of electrodes continuously, without introduction of iron or other impurities into the furnace.

It is also an object of the invention to change the electrode from the conventional type made of amorphous coal to a new type made from graphite and paste, without the need for causing a long furnace shutdown to change the electrode column, but gradually achieving the new electrode as the electrode column exhausts.

Another object of the invention is to utilize a dual sliding system to allow the replacement electrode to slide with or without the metal casing, since introduction of the casing may be necessary on limited occasions.

Another object of the invention is to provide a contact plate for transmitting electrical current, decreasing substantially the contact area and concentrating, within a minimal and given area, the electric current to favor the electrode baking.

Another object of the invention is to make it possible to provide an adequate height of the contact plates over the mixture in order not to damage the casing and to adequately bake the paste.

Another object of the invention is to carry out a continuous sliding of the electrode to improve the paste baking.

BRIEF DESCRIPTION OF THE DRAWINGS

The invention may be better understood by reference to the attached drawings in which:

FIG. **1** is an elevational view of an apparatus for replacing an amorphous coal electrode with a graphite and paste electrode;

FIG. **2** is an elevational view of an apparatus with dual sliding means for independently sliding the graphite nucleus of the electrode;

FIG. **2A** is a schematic cross-sectional view of the lower sliding system portion of FIG. **2**;

FIG. **2B** is a schematic cross-sectional view of the upper sliding system portion of FIG. **2**;

FIGS. **3**, **4** and **5** are views of the electric conduction plates, in plan view, longitudinal section and side elevation, respectively.

DESCRIPTION OF THE PREFERRED EMBODIMENTS

FIG. **1** shows an electrode column in which a running transition is made from a convention amorphous coal electrode **1** through a series of consecutive graphite electrodes **2** with an evident reduction in their diameter or section, until arriving at an electrode **20** of final diameter. The electrode column is united by a support system **3** and **4** uniting the graphite **20** with casing **40**, and a fastening system to fix the casing to the amorphous coal electrode, for which it is necessary to mechanize the upper end of the final electrode to the inside diameter of casing **40**. In this way, the furnace may continue to operate, burning out the conventional electrode and welding casings at their upper side, and sliding with traditional rings **43** until the casing **40** arrives at the height of the mixture.

FIG. **2** shows this installation with a second sliding system **30**, which allows a limitation of supports **3** and **4** previously applied to the graphite. Utilizing the second sliding system, it is possible to slide only the graphite electrode **20**, the casing being retained by the first sliding system **44** in order not to introduce the casing **40** and its impurities into the furnace. Alternatively, it is possible to independently slide the electrode with its casing by using conventional sliding system **44**. When this is necessary, sliding rings **43** of lower system **44** are opened, and the sliding rings **30** of the upper sliding system **31** are activated. It is also possible to proceed by opening the upper rings **30** and utilizing the conventional system of rings **43** of the lower system **44**.

FIG. **2A** shows the first or lower sliding system portion in greater detail, including furnace **5**, paste **9** and a star or crosshead means **41** fastening graphite core **20** to casing **40**.

FIG. **2B** shows the second or upper sliding means in greater detail. The system includes a pair of circumferential rings **30** which are internally toothed **32**, but which could also be similarly fluted or embossed. When the rings **30** are clamped onto graphite core **20**, the internal surface engraves the graphite core with a corresponding series of ridges, improving penetration of the paste into the graphite core and ultimately improving the binding of the paste with the graphite.

When changing the upper sliding rings **30**, the type of plate **8** is also changed to the plate shown in FIGS. **3** through **5**. According to the invention, the new plate **8** is characterized in its smaller size which is necessary in order to concentrate the electric current, in the subdivision of the plate into eight semi-circular segments **8***a* through 8*h*, and in the existence of projections **80-80A**, and **81-81A**, located on the lower and upper part of each end, and which have the object to line up the plates with others, so that in case of paste failure, the inside diameter will be kept in contact between plates **8** and it cannot be introduced within the casing **40**. Plate **8** includes inside cooling means **82**, which is lower than but of the same type as those normally used.

It is also possible to operate the furnace by means of a robot controlled by computer. Utilizing a robot, it is possible to maintain the height of the columns shown in FIG. **2** by means of suspension cylinders **6** within certain limits, so that on one hand the paste is not baked at a level where the hot gases from the process would melt the casing, and on the other hand, the process is not carried out in areas where baking of the paste would be insufficient.

Finally, it is also very important to obtain a continuous sliding of the electrodes. To this end, the hydraulic control system **31** for sliding is modified.

The invention is not limited to the exact details of this embodiment shown, but on the contrary, the invention may be modified whenever the essential characteristics of the invention are not changed.

What is claimed is:

1. A process for the continuous manufacture of an impurity and iron-free electrode for an electric arc furnace, comprising steps of sliding a prebaked graphite core downwardly within a casing above the furnace, introducing within the casing and surrounding the core a paste which is to bake to form the electrode, providing a contact plate for transmitting an electric current to the electrode, and sliding the electrode by means of a pair of sliding means in succession, including a first sliding means for retaining the casing, and a second sliding means for sliding the graphite core, the second sliding means comprising a pair of circumferential, internally fluted, toothed or embossed rings including successive opening and closing clamps, said rings engraving the graphite core with circumferential ridges for improved penetration of the paste and binding of the paste to the graphite core.

2. Process according to claim **1**, wherein an amorphous coal electrode in operation with said furnace is to be replaced by an electrode having a graphite core and produced by said process for continuous manufacture, and wherein a union is made between the amorphous coal electrode and the casing utilizing a fastening means connecting the graphite core to the casing.

3. Process according to claim **1**, wherein in the event of failure of the second sliding means, the first sliding means acts to displace the entire electrode by opening said pair of rings on said second sliding means.

4. Process according to claim **1**, wherein said contact plate is subdivided into eight semi-circular segments, each having an arc of about 45°, which are substantially identical to assure contact position.

5. Process according to claim **4**, wherein said sliding step is controlled by piston actuated cylinders which control the height of the contact plate above the furnace.

* * * * *

US005391433A

United States Patent [19]

Kawakubo et al.

[11] **Patent Number: 5,391,433**

[45] **Date of Patent: Feb. 21, 1995**

[54] **CARBON MATERIAL FOR ELECTRODES AND PROCESS FOR PREPARING IT**

[75] Inventors: **Takamasa Kawakubo**, Tano; **Yoshihisa Suda**, Maebashi, both of Japan

[73] Assignee: **Mitsubishi Pencil Kabushiki Kaisha**, Tokyo, Japan

[21] Appl. No.: **971,283**

[22] Filed: **Nov. 4, 1992**

[30] **Foreign Application Priority Data**

Nov. 29, 1991 [JP] Japan 3-339462

[51] **Int. Cl.**^{6} **G01N 27/30**

[52] **U.S. Cl.** **428/408;** 204/294; 252/502; 313/348; 313/336; 313/341; 428/312.2; 428/318.6; 428/319.1; 445/46; 445/51

[58] **Field of Search** 313/348, 336, 341; 445/46, 51; 252/502; 204/294; 428/408, 312.2, 318.6, 319.1

[56] **References Cited**

U.S. PATENT DOCUMENTS

4,034,031	7/1977	Lersmacher et al.	445/46
4,137,477	1/1979	Krol et al.	252/502
4,193,013	3/1980	Futamoto et al.	313/341
4,412,675	11/1983	Kawakubo	267/167
4,469,984	9/1984	Sergeen et al.	313/348
4,624,811	11/1986	Waitkus et al.	264/29.5

FOREIGN PATENT DOCUMENTS

0121781	3/1984	European Pat. Off. .
2286107	9/1975	France .
3021427	1/1982	Germany .
56-156785	12/1981	Japan .
58-12201	7/1983	Japan .
1-250854	10/1989	Japan .
2-34902	8/1990	Japan .
3-85711	4/1991	Japan .
4-74958	2/1992	Japan .
4-74957	3/1992	Japan .

OTHER PUBLICATIONS

Database WPIL , Week 8436, Derwent Publications Ltd., London, GB:AN 84-222649 & JP-A-59 131 567 (Nippon Oil Seal Ind.) 28 Juillet 1984 *abstract*.

Patent Abstracts of Japan, vol. 11, No. 351 (E-557) 17 Nov. 1987 & JP-A-62 128 452 (Meidensha Electric MGF Co.) 10 Jun. 1987 *abstract*.

Patent Abstracts of Japan, vol. 8, No. 200 (E-266) 13 Sep. 1984 & JP-A-59 087 777 (Matsushita Denki Sangyo KK) 21 May, 1984 *abstract*.

Patent Abstracts of Japan, vol. 15, No. 052 (C-0803) 7 Feb., 1991 & JP-A-22 83 667 (Ibiden Co., Ltd.) 21 Nov. 1990 *abstract*.

Ser. No. 325,291 Filed on Mar. 17, 1989 for Hiroko Kaneko et al.

Ser. No. 905,768 Filed on Jun. 29, 1992 for Akira Negisi et al.

(List continued on next page.)

Primary Examiner—A. A. Turner
Attorney, Agent, or Firm—Darby & Darby

[57] **ABSTRACT**

A carbon material for electrodes which is a graphite/glass like carbon composite material having a structure in which the crystals of the graphite are oriented in one direction in the matrix of the glass like carbon so as to possess an electrode reaction activity inherent in the graphite crystals, having a maximum pore diameter of 150 Å or less, and having electrolyte non-penetrative properties substantially corresponding to those of the glass like carbon; and a process for preparing a carbon material for electrodes which comprises the steps of highly dispersing, composing and orienting a graphite fine powder of the sufficiently grown crystals in an organic substance which can leave a glass like and less graphitizable carbon when calcined in a non-oxidizing atmosphere, and then calcining and carbonizing the composition. The carbon material of the present invention permits applying both current and voltage to biological systems, has no toxicity, such mechanical strength as to permit detecting a trace portion and reproducibility, can measure an electrode reaction stably, and is inexpensive.

2 Claims, 2 Drawing Sheets

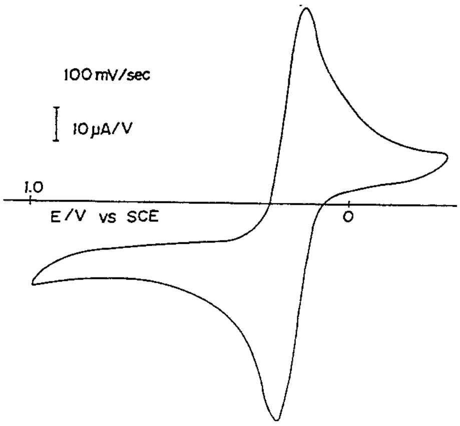

OTHER PUBLICATIONS

Ser. No. 905,767 Filed on Jun. 29, 1992 for Hiroko Kaneko et al.

Hiro Kaneko et al., *Extended Abstracts* 2, 21-11-18 -P, d1, "Electrochemical Behavior of GRC electrodes for Voltammetry".

T. Abe, et al., *Extended Abstracts* 2, 21-13-04-P, d1, "Fabrication and Application of Non-Carbon Microelectrodes to *In-Vivo* Voltammetry".

Hiroko Kaneko, et al., *Extended Abstracts* 2, 18-14-10-P, d5, "Rodox Reactions of Vanadium Ions on GRC and Carbon Fiber Electrodes".

The Japan Association for the Advancement of Science, The 17th Committee Materials 117-213-c-1, Feb. 1, 1991.

Takamasa Kawakubo et al., "Electrochemical Behavior of Carbon Microelectrodes Prepared by Using Graphite/Carbon Composite", *Tanso 152*:106-114, (1992).

FIG. 1

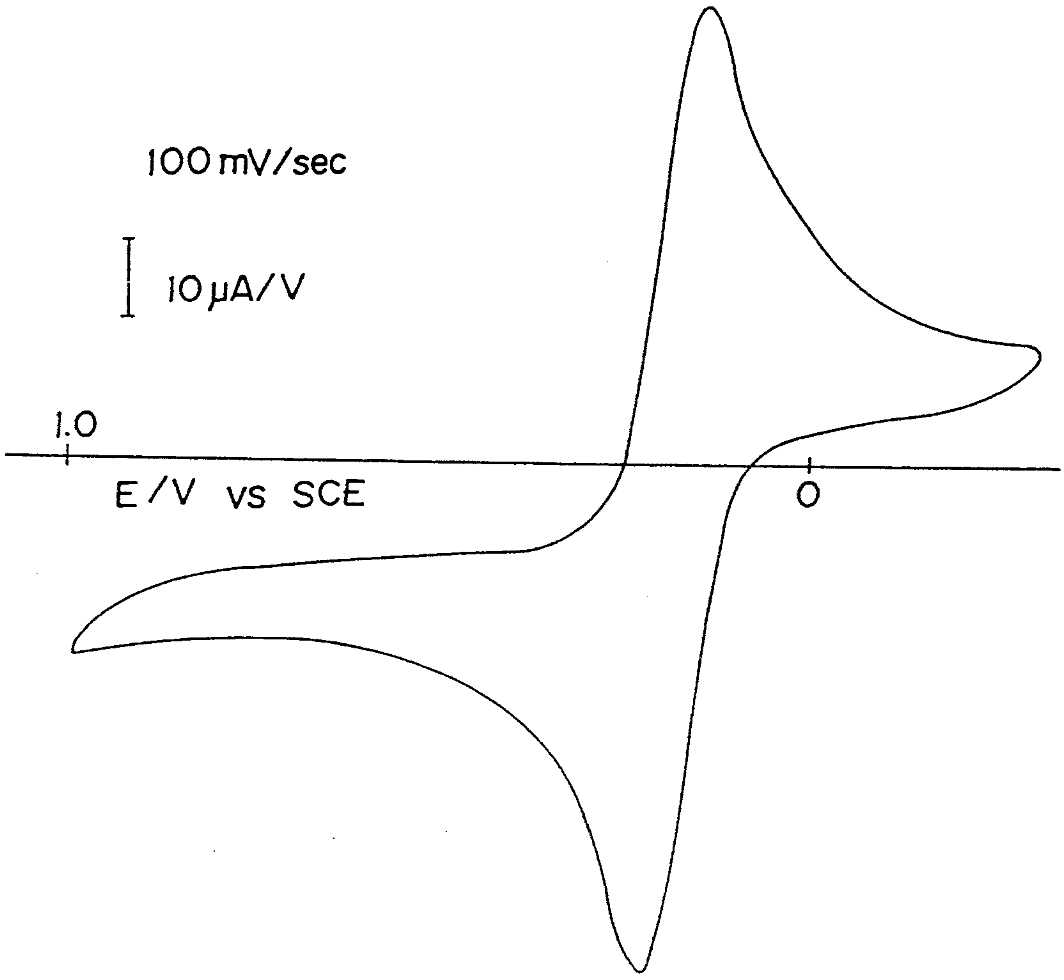

FIG. 2

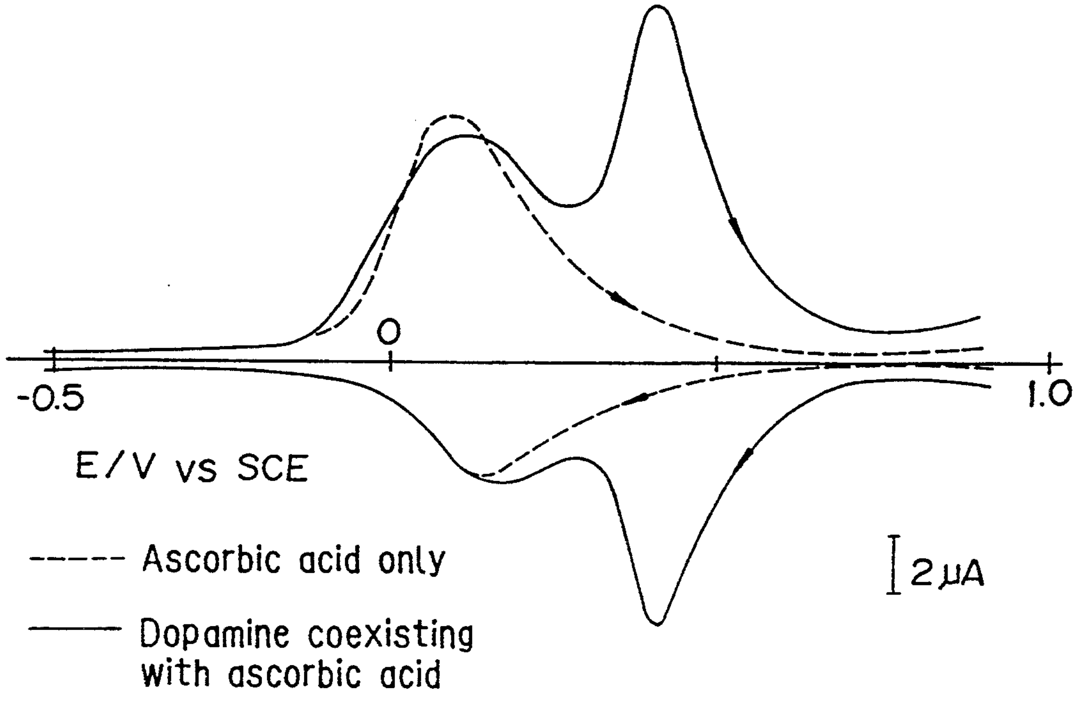
0
-0.5
1.0
E/V vs SCE
----- Ascorbic acid only
——— Dopamine coexisting with ascorbic acid
2 μA

CARBON MATERIAL FOR ELECTRODES AND PROCESS FOR PREPARING IT

BACKGROUND OF THE INVENTION

(i) Field of the Invention

The present invention relates to a carbon material for electrodes which are used in electrochemical detectors, sensors for environmental analysis, sensors for pathologic inspection, and probe electrodes for detection which are required to be harmless and nonpoisonous to biological systems and foods, and it also relates to a process for preparing the carbon material.

(ii) Description of the Prior Art

In a wide field of electrochemical measuring techniques, an abbreviated rapid analysis which has been swiftly developed in recent years and which utilizes a sensor as a detecting means permits performing a measurement with very high selectivity and high sensitivity. Therefore, the use of the abbreviated rapid analysis is begun to analyze and evaluate biological samples and environmental samples containing trace amounts of many compounds which are components to be measured.

Furthermore, nowadays, it has been very important to obtain, for example, biological information of such specific substances on a cellular level in vivo in situ in local parts of the biological system and the like by the use of a sensor electrode capable of detecting them with high sensitivity. For this purpose, the electrode is used as follows: The electrode is disposed or stuck in the vicinity of an aimed cell of an organism to give physical, chemical and electrical stimulation to the cell, so that a response substance is released or a chemical change occurs, with the result that a specific substance is produced. At this time, the electrode is required to select and measure the thus produced specific substance.

A selected electrode material for a working electrode of the electrochemical detector has a large influence on a kind of substance to be measured and the possibility of quantitative analysis. Heretofore, as such a working electrode for voltammetry, there have been investigated a mercury dropping electrode, a static mercury electrode, platinum, gold, gold amalgam, copper and various conformations of carbon (glass like carbon, carbon fiber, carbon paste and pyrolitic graphite), but the mercury electrode and the glass like carbon are predominantly used as an electrode for polarographies and as an electrode for electrochemical detectors, respectively.

However, the polarography has a problem of safety, since it uses toxic mercury. The glass like carbon also has many drawbacks which should be eliminated. That is, the glass like carbon has low current sensitivity, and when a high positive potential is applied thereto through an electrolyte, the reproducibility on the surface of the electrode deteriorates. Thus, a utilizable potential range is limited to about +1.0 V or less. In addition, the glass like carbon is largely affected by a pretreatment such as an oxidizing treatment, and so the reproducibility of the measurement is unreliable.

The platinum electrode cannot be used on the negative side of a hydrogen generating potential, and additionally its pretreatment is also difficult.

The gold electrode is less resistant to halide ions. Since these electrodes are made of the metals, they are dissolved when used, thereby releasing toxic ions which harm the biological system. However, there are not good electrodes which can take the place of them, and hence these electrodes have been still unavoidably used. Moreover, in these days, a carbon micro-electrode comprising one carbon fiber (having a diameter of several micrometers) has been begun to be on the market, but according to a pursuit test by the present inventors, it has been apparent that the carbon micro-electrode has the large variation of electrochemical properties, poor reproducibility of data, and very low reliability.

Graphite has a wide polarized potential domain, an electrode reaction activity and a less toxicity to the organisms, and therefore it is a useful material. However, the graphite is poor in mechanical strength, and when it is used singly, an electrolyte penetrates into its structure. For the prevention of this penetration, the graphite is required to be impregnated with an oil or resin. Nevertheless, in the system in which even a small amount of an organic solvent is contained, the material with which the graphite has been impregnated is dissolved therein, and the variation of the electrochemical properties increases, so that the reproducibility of data is poor.

SUMMARY OF THE INVENTION

The present invention intends to remove the drawbacks of the above-mentioned conventional electrode materials.

A first object of the present invention is to provide a carbon material for electrodes by which both current and voltage can be applied to biological systems and which has no toxicity (which is safe, even if it remains in the biological systems) and which can be used to inspect foods, and to provide a process for preparing the same.

A second object of the present invention is to provide a carbon material for electrodes which permits electrochemically detecting an extremely slight (trace) portion and which has mechanical strength, and to provide a process for preparing the same.

A third object of the present invention is to provide an inexpensive carbon material for electrodes which has the less variation of electrode properties and the reproducibility of data and which can stably measure an electrode reaction without requiring any specific pretreatment.

That is, the aspects of the present invention are as follows.

(1) A carbon material for electrodes which is a graphite/glass like carbon composite material having a structure in which the crystals of the graphite are oriented in one direction in the matrix of the glass like carbon so as to possess an electrode reaction activity inherent in the graphite crystals, having a maximum pore diameter of 150 Å or less, and having electrolyte non-penetrative properties substantially corresponding to those of the glass like carbon.

(2) The carbon material for electrodes described in the preceding paragraph (1) wherein 65 to 95% of the graphite/glass like carbon composite material is constituted of the matrix of the non-penetrative glass like carbon.

(3) A process for preparing a carbon material for electrodes which comprises the steps of highly dispersing and composing a graphite fine powder of the sufficiently grown crystals in an organic substance which can leave a glass like and less graphitizable carbon when calcined in an inert atmosphere or a non-oxidizing at-

mosphere, extruding the composition into a desired form, so that orienting, in an extrusion direction, graphite crystals of the composition, and then calcining the composition up to a high temperature in the inert atmosphere or the non-oxidizing atmosphere to carbonize the contained organic substance.

(4) The process for preparing a carbon material for electrodes described in the preceding paragraph (3) wherein the organic substance which can leave the glass like and less graphitizable carbon is at least one selected from the group consisting of an organic polymeric material, its monomer or oligomer, a tar, a pitch, a carbonized pitch, a thermoplastic resin and a prepolymer of a thermosetting resin.

(5) The process for preparing a carbon material for electrodes described in the preceding paragraph (4) wherein the organic polymeric substance is one selected from the group consisting of lignin, cellulose, tragacanth gum, gum arabi, natural gum and its derivative, a compound having a condensed polycyclic aromatic moiety in the basic structure of the molecule, dinitronaphthalene, pyrene, pyranthrone, violanthrone, an indanthrene-based vat dye derived from benzanthrone, and its intermediate.

(6) The process for preparing a carbon material for electrodes described in the preceding paragraph (4) wherein the thermoplastic resin is a resin obtained by oxidizing and crosslinking, as a carbon precursor-producing treatment, one selected from the group consisting of polyvinyl chloride, polyacrylonitrile, polyvinylidene chloride, chlorinated polyvinyl chloride, polyvinyl acetate, polyvinyl alcohol, polyvinyl pyrrolidone, ethyl cellulose, carboxymethyl cellulose, polyvinyl chloride.vinyl acetate copolymer, polyphenylene oxide, polyparaxylene, polysulfone, polyimide, polyamideimide, polybenzimidazole and polyoxadiazole.

(7) The process for preparing a carbon material for electrodes described in the preceding paragraph (4) wherein the thermosetting resin is at least one prepolymer selected from the group consisting of a phenolic resin, a furan resin, an epoxy resin, a xylene resin and a COPNA resin, and when heated, the thermosetting resin can flow, produce an intermolecular crosslinkage, and then cure in a three-dimensional form, and it can give a high carbon residue yield without any specific carbon precursor-producing treatment.

(8) The process for preparing a carbon material for electrodes described in the preceding paragraph (4) wherein the pitch is what is obtained by subjecting a petroleum pitch, a coal tar pitch, an asphalt, or a carbonized pitch of the pitch or a hydrocarbon compound comprising a synthetic resin to an anti-graphitization treatment comprising an oxidizing treatment for the purpose of crosslinking it.

(9) The process for preparing a carbon material for electrodes described in the preceding paragraph (3) wherein a mesophase pitch having a carbon residue yield of 75-95% formed by carbonizing a pitch to increase a carbon residue, and then crosslinking the same to obtain anti-graphitization properties is mixed with an organic substance which constitutes a matrix and which becomes a glass like carbon, and the mixture is then co-carbonized.

(10) The process for preparing a carbon material for electrodes described in the preceding paragraph (3) wherein the graphite fine powder is one selected from the group consisting of graphite whisker, highly oriented pyrolitic graphite (HOPG), Kish graphite, natural graphite and artificial graphite.

(11) The process for preparing a carbon material for electrodes described in the preceding paragraph (3) wherein the calcination and the carbonization are carried out by a heat treatment at a temperature of 500° to 2500° C. in an inert atmosphere or a non-oxidizing atmosphere.

BRIEF DESCRIPTION OF THE DRAWINGS

FIG. **1** shows a redox reactivity of ferrocyanate ions/ferricyanate ions in the 1M KCl system of 5×10^{-3} M $Fe(CN)_6^{4-}$ in accordance with cyclic voltammetry by the use of a carbon material electrode of the present invention.

FIG. **2** shows measured results of dopamine in the presence of ascorbic acid in a Ringer's solution by the use of a carbon material electrode of the present invention.

DETAILED DESCRIPTION OF THE INVENTION

The present inventors have paid much attention to a fact that the crystal edge surface of graphite has extremely excellent properties which are not present in other materials, that is, it is rich in an electrode reactivity, has a large polarized potential domain, can be easily pretreated, does not deteriorate with time, has high stability, does not dissolve, and is free from toxicity. Thus, the present inventors have intensively researched, and as a result, they have found that an electrode material comprising a novel graphite/glass like carbon composite carbon having non-permeability by itself without requiring impregnation with an oil or a resin and large mechanical strength which can be obtained by using a glass like carbon showing non-permeability as a matrix and orientating graphite in one direction. On the basis of this knowledge, the present invention has been completed.

In the carbon material for electrodes which is the graphite/glass like carbon composite carbon of the present invention, 65-95% of the constitutional material comprises a glass like carbon matrix having non-permeability formed by using, as a starting material, an organic resin material having a three-dimensional crosslinkage or a natural organic material which can be carbonized in a solid phase. In the case that it is required to further heighten density, a mesophase pitch having a carbon residue yield of 75-95% formed by carbonizing a pitch to increase a carbon residue content and to obtain anti-graphitization properties is blended with the glass like carbon matrix and then co-carbonized. When the content of the matrix carbon is less than 65%, defects and pores are generated in the material and the inherent non-permeability is lost unpreferably. Furthermore, when the content of the matrix carbon is more than 95%, the active electrode reaction properties which the graphite crystals have are lost unpreferably.

An organic substance which constitutes the matrix material and which can leave a glass like and less graphitizable carbon when calcined in an inert atmosphere or a non-oxidizing atmosphere is an organic resin material having a three-dimensional crosslinkage or a natural organic material which can be carbonized in a solid phase. Typical examples of the organic substance include an organic polymeric substance and one or a mixture of two or more of a monomer and an oligomer of the organic polymeric substance, a tar, a pitch, a carbonized pitch, a thermoplastic resin and a prepolymer of a thermosetting resin.

Here, the organic polymeric substance is a substance other than the undermentioned thermoplastic resin and thermosetting resin, and examples of the organic polymeric substance include lignin, cellulose, tragacanth gum, gum arabi, natural gum and its derivative, a compound having a condensed polycyclic aromatic moiety such as saccharide, chitin or chitosan in the basic structure of the molecule, formalin condensate of naphthalenesulfonic acid, dinitronaphthalene, pyrene, pyranthrone, violanthrone, an indanthrene-based vat dye derived from benzanthrone, and its intermediate.

The thermoplastic resin is a resin obtained by oxidizing and crosslinking, as a carbon precursor-producing treatment, a usual thermoplastic resin such as polyvinyl chloride, polyacrylonitrile, polyvinylidene chloride, chlorinated polyvinyl chloride, polyvinyl acetate, polyvinyl alcohol, polyvinyl pyrrolidone, ethyl cellulose, carboxymethyl cellulose, polyvinyl chloride.vinyl acetate copolymer, or a heat-resistant thermoplastic resin such as polyphenylene oxide, polyparaxylene, polysulfone, polyimide, polyamide-imide, polybenzimidazole and polyoxadiazole.

The thermosetting resin is a phenolic resin, a furan resin, an epoxy resin, a xylene resin and a COPNA resin, and when heated, the thermosetting resin can flow, produce an intermolecular crosslinkage, and then cure in a three-dimensional form, and it can give a high carbon residue yield without any specific carbon precursor-producing treatment.

The pitch is what is obtained by subjecting a petroleum pitch, a coal tar pitch, an asphalt, or a carbonized pitch (which is treated at 400° C. or less and which has a carbon residue yield of 75–95%) of a hydrocarbon compound such as a pitch or a synthetic resin being carried out an anti-graphitization treatment such as an oxidizing treatment for the purpose of crosslinking it.

Next, reference will be made to a graphite fine powder to be used in a composite form with the organic material which is the starting material of the matrix carbon. In order to achieve the good electrode reaction, it is important to prepare a composite carbon material which is systematically oriented so that the crystal edge surface of the highly developed graphite may be arranged vertically to the reaction surface of the electrode. Therefore, graphite whisker, highly oriented pyroiltic graphite (HOPG), Kish graphite, crystalline natural graphite can be used preferably. The particle diameter of the graphite fine powder is preferably several micrometers or less in terms of a maximum diameter, depending upon the diameter of the desired electrode.

Next, the preparation process of the present invention will be described. As starting material, the one or more organic substances which can leave the glass like and less graphitizable carbon constituting the matrix are selected from the above-mentioned natural polymeric substance, synthetic polymeric substance, thermosetting resin, thermoplastic resin and pitches, and the one or more selected organic substances are then blended with the above-mentioned crystalline carbon fine powder in compliance with a purpose and the fine powder is sufficiently dispersed therein by a Henschel mixer or the like.

If it is necessary to heighten density or to smooth the surface of the system, a carbonized pitch having a high carbon residue yield is blended with the above-mentioned composition, and a plasticizer, a solvent and the like are then added thereto. Afterward, they are sufficiently mixed/dispersed by a kneader such as a pressure kneader or a twin roll by which shearing force can be highly given. After granulated by a pelletizer, the resultant granules are extruded at a high velocity so as to have a desired diameter by means of a screw type or a plunger type extruder, and an orientating operation is then carried out so as to successfully arrange the crystals of the mixed graphite in an extrusion direction, whereby a molded article is obtained.

Next, this molded article is treated for 10 hours in an air oven heated to 180° C., while stretched, to form a carbon precursor material. Furthermore, it is gradually heated up to 1500° C. in a nitrogen gas, while a temperature rise velocity is controlled, to complete the carbonization, thereby obtaining a carbon material for electrodes.

Depending upon the purpose, the carbon material may be densified all over by carrying out a heat treatment up to 2200° C. in vacuo or in an argon gaseous phase.

By using the above-mentioned carbon material for electrodes of the present invention, there can be pre pared a novel carbon electrode for electrochemical measurement which has a non-permeability corresponding to that of a glass like carbon and an electrode reaction activity on the edge surfaces of graphite crystals. The carbon electrode prepared from the carbon material for electrodes of the present invention can be easily reused by breaking off a used portion thereof to expose a new section of the electrode, since it does not require any special pretreatment. Additionally, in the carbon material for electrodes of the present invention, the deterioration of the electrode reaction activity can be sufficiently inhibited, in contrast to the glass like carbon.

EXAMPLES

Example 1

A mixed resin system of 35% by weight of a chlorinated vinyl chloride resin (T-742, made by Nippon Carbide Industries Co., Ltd.) and 50% by weight of a furan resin (Hitafuran VF-302, made by Hitachi Chemical Co., Ltd.) was used as a matrix carbon material of an electrode, and 15% by weight of a natural graphite fine powder (average particle diameter=1 μm, CSSP-B, made by Nippon Graphite Co., Ltd.) was added to the mixed resin system to form a composition. Next, 20% by weight of diallyl phthalate monomer was added as a plasticizer to 100% by weight of the resultant composition and then dispersed therein by the use of a Henschel mixer. Afterward, the mixture was sufficiently repeatedly kneaded by the use of a twin roll for mixing whose surface temperature was maintained at 120° C., thereby obtaining a sheet-like composition. This composition was further pelletized by a pelletizer to obtain a composition for molding in the form of pellets. These pellets were extruded at 130° C. at a velocity of 3 m/second by a screw type extruder with a die having a diameter of 0.7 mm, while deaerated, and the molded article was fixed on a frame and then treated for 10 hours in an air oven heated up to 180° C. to form a carbon precursor wire material. Next, this wire material was heated up to 500° C. at a temperature rise rate of 10° C./hour and then up to 1000° C. at a temperature rise rate of 50° C./hour, and afterward, it was further heated up to

1500° C. at 100° C./hour, maintained at 1500° C. for 3 hours, and then allowed to stand, whereby the calcination was completed.

In the thus obtained carbon material for electrodes, a graphite/matrix carbon ratio was 32/68. The pore diameter of the system was measured in accordance with a mercury pressure method by the use of a porosimeter (Autoscan-60) made by Yuasa Ionics Co., Ltd., and as a result, the maximum pore diameter was 120 Å. Electrode properties were evaluated by observing the redox reactivity of ferrocyanate ions/ferricyanate ions in the 1M KCl system of 5×10^{-3} M $Fe(CN)_6^{4-}$ as the standard of an electrode reaction activity by the use of a polarographic analyzer (YANACO P-1100) made by Yanagimoto Co., Ltd., and the results are shown FIG. 1. Even when any special pretreatment was not made, blank current was small, and sharp peaks of a oxidation wave and a reduction wave were obtained and a difference ΔEp between peak potentials was near to a theoretical value. In addition, the increase of a current value attributed to the permeation of the electrolyte was not observed, which meant that the carbon material had non-permeability against the electrolyte substantially corresponding to a glass like carbon.

Example 2

A mixed resin system of 50% by weight of a furan resin (Hitafuran VF-302, made by Hitachi Chemical Co., Ltd.) and 30% by weight of a carbonized pitch (carbon residue yield =85%, MH-1P, made by Kureha Chemical Industry Co., Ltd.) was used as a matrix carbon material of an electrode, and 20% by weight of a natural graphite fine powder (average particle diameter=1 μm, CSSP-B, made by Nippon Graphite Co., Ltd.) was added to the mixed resin system and then dispersed therein by the use of a Henshel mixer. Afterward, the mixture was sufficiently repeatedly kneaded by the use of a twin roll for mixing whose surface temperature was maintained at 120° C., thereby obtaining a sheet-like composition. This composition was vacuum-extruded at a discharge rate of 5 m/second by the use of a plunger type oil hydraulic extruder. Afterward, the same procedure as in Example 1 was carried out to obtain a desired carbon material for electrodes.

In the thus obtained carbon material for electrodes, a graphite/matrix carbon ratio was 30/70. The maximum pore diameter of the system was 65 Å.

In reference to the electrode characteristic, a measured result by differntial pulse voltammetry method regarding dopamine coexisting together ascorbic acid in Ringer's solution is shown in FIG. 2.

A current peak at 0.15 V vs. Standard Caromel Electrode (S.C.E.) was observed when only ascorbic acid was present.

50 μM concentration of dopamine was separately observed in coexistence of 500 μM concentration of ascorbic acid. That is, the respective corresponding peaks at 0.15 V and 0.4 V vs. S.C.E. were observed with good reproducibility in the coexisting state of ascorbic acid and dopamine. The fact shows that the electrode is extremely active in comparison with being unable to separately detect the respective oxydation-reduction waves by overlapping each other in the case of almost carbon electrodes. In addition, the increase of a current value attributed to the permeation of the electrolyte was not observed, which meant that the carbon material had non-permeability against the electrolyte substantially corresponding to a glass like carbon.

What is claimed is:

1. A carbon material for electrodes which is a graphite/glass like carbon composite material having a structure in which the crystals of the graphite are oriented in one direction in the matrix of the glass like carbon so as to possess an electrode reaction activity inherent in the graphite crystals, having a maximum pore diameter of 150 Å or less, and having electrolyte non-penetrative properties substantially corresponding to those of the glass like carbon.

2. A carbon material for electrodes which is a graphite/glass like carbon composite material having a structure in which the crystals of the graphite are oriented in one direction in the matrix of the glass like carbon so as to possess an electrode reaction activity inherent in the graphite crystals, having a maximum pore diameter of 150 Å or less, and having electrolyte non-penetrative properties substantially corresponding to those of the glass like carbon, wherein 65 to 95% of the graphite/glass like carbon composite material is constituted of the matrix of the non-penetrative glass like carbon.

* * * * *

US005978410A

United States Patent [19]

Johansen et al.

[11] **Patent Number: 5,978,410**

[45] **Date of Patent: Nov. 2, 1999**

[54] METHOD FOR PRODUCTION OF CARBON ELECTRODES

[75] Inventors: **Johan Arnold Johansen**; **Reidar Ugland**, both of Kristiansand, Norway

[73] Assignee: **Elkem ASA**, Norway

[21] Appl. No.: **08/913,450**

[22] PCT Filed: **Mar. 1, 1996**

[86] PCT No.: **PCT/NO96/00043**

§ 371 Date: **Aug. 26, 1997**

§ 102(e) Date: **Aug. 26, 1997**

[87] PCT Pub. No.: **WO96/27276**

PCT Pub. Date: **Sep. 6, 1996**

[30] **Foreign Application Priority Data**

Mar. 2, 1995 [NO] Norway 950807

[51] **Int. Cl.**^{6} **H05B 7/107**

[52] **U.S. Cl.** **373/89**; 373/92

[58] **Field of Search** 373/88–97; 29/825

[56] **References Cited**

U.S. PATENT DOCUMENTS

3,819,841	6/1974	Persson	373/89
4,133,968	1/1979	Frolov	373/89
4,527,329	7/1985	Bruff et al.	29/825
4,575,856	3/1986	Persson	373/89
4,612,151	9/1986	Bruff et al.	264/105
4,692,929	9/1987	Cavigli et al.	373/89
4,696,014	9/1987	Orrling	373/89

FOREIGN PATENT DOCUMENTS

327741	8/1989	European Pat. Off. .
116153	7/1968	Norway .
149451	10/1979	Norway .
154860	1/1987	Norway .

Primary Examiner—Tu Ba Hoang
Attorney, Agent, or Firm—Bierman, Muserlian and Lucas

[57] ABSTRACT

The present invention relates to a method for production of carbon electrodes where a first unbaked carbonaceous electrode paste containing a binder which cures at a temperature below 500° C. is supplied to an annulus between a curing chamber having an inner cross section corresponding to the cross section of the electrode which is to be produced and an inner mould material, curing of the first electrode paste by means of supplying heat to the curing chamber, removing of elongated sections of the cured first electrode paste from the curing chamber. The lengths of the cured first electrode paste are mounted on the top of the electrode column in an electric smelting furnace, a second electrode paste is optionally supplied to the central opening of the cured body of the first electrode paste, whereby the cured body of the first electrode paste and the second electrode paste are baked into a solid carbon electrode in the area of supplying electric operating current to the electrode.

20 Claims, 6 Drawing Sheets

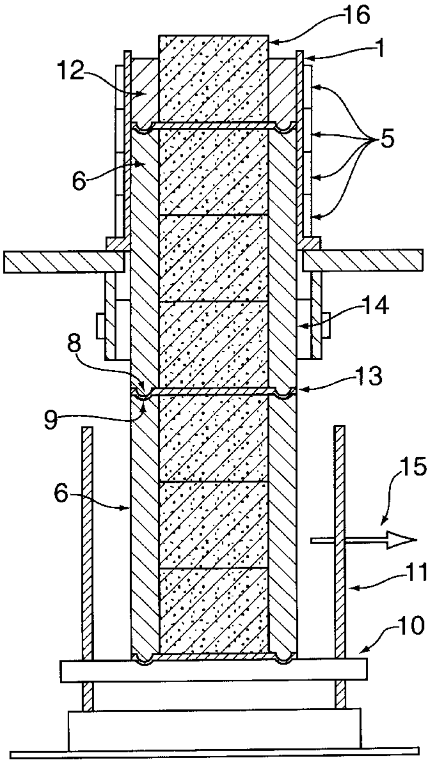

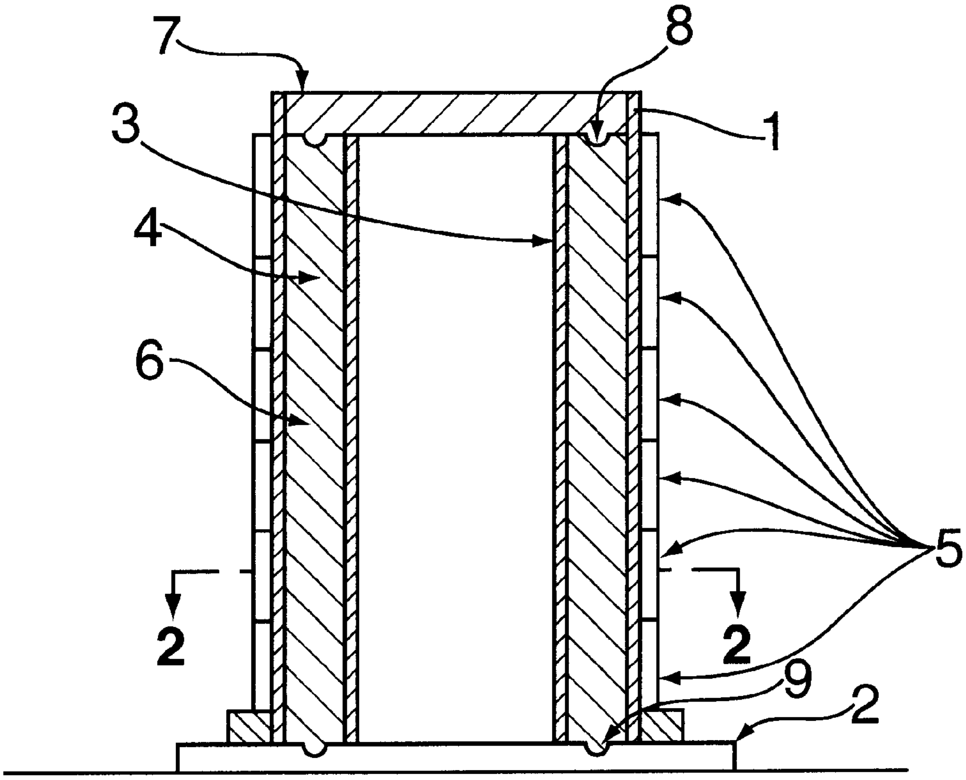

FIG. 1

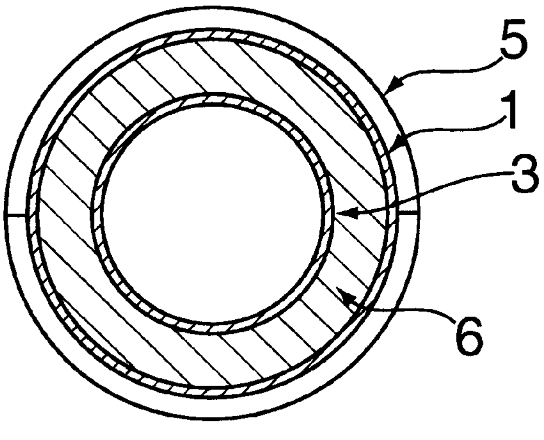

FIG. 2

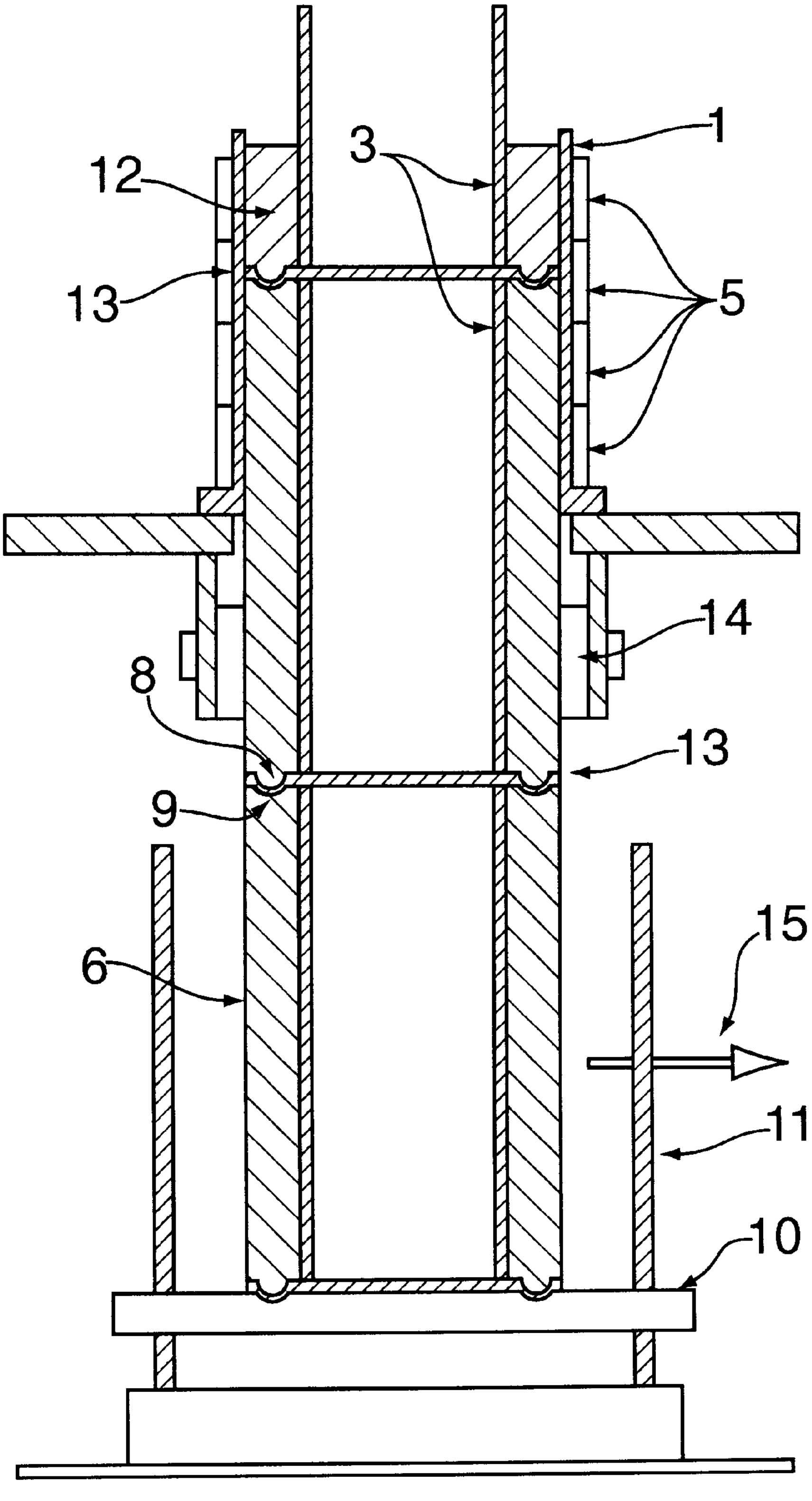

FIG. 3

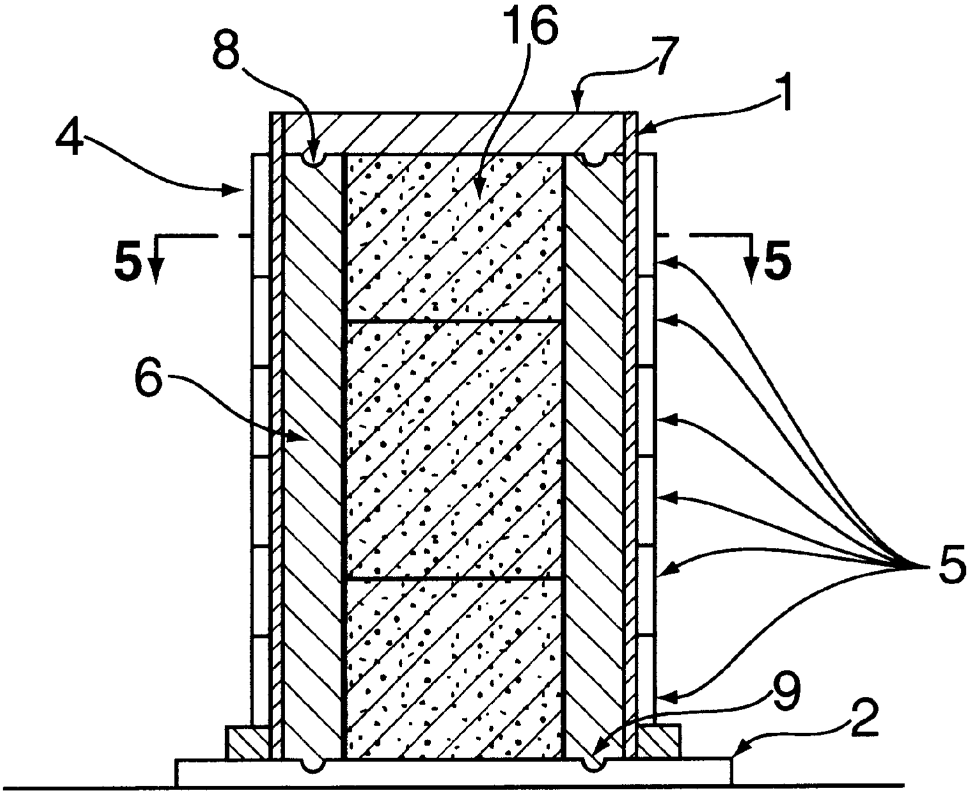

FIG. 4

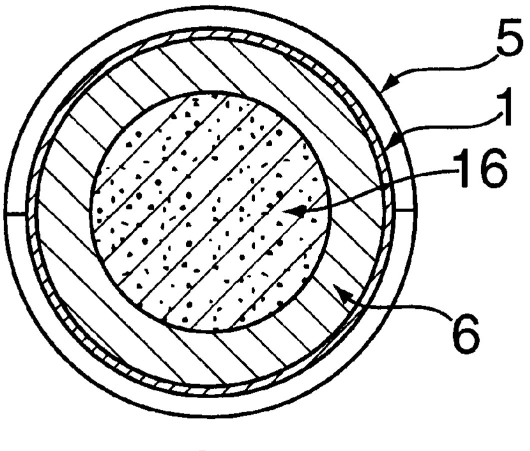

FIG. 5

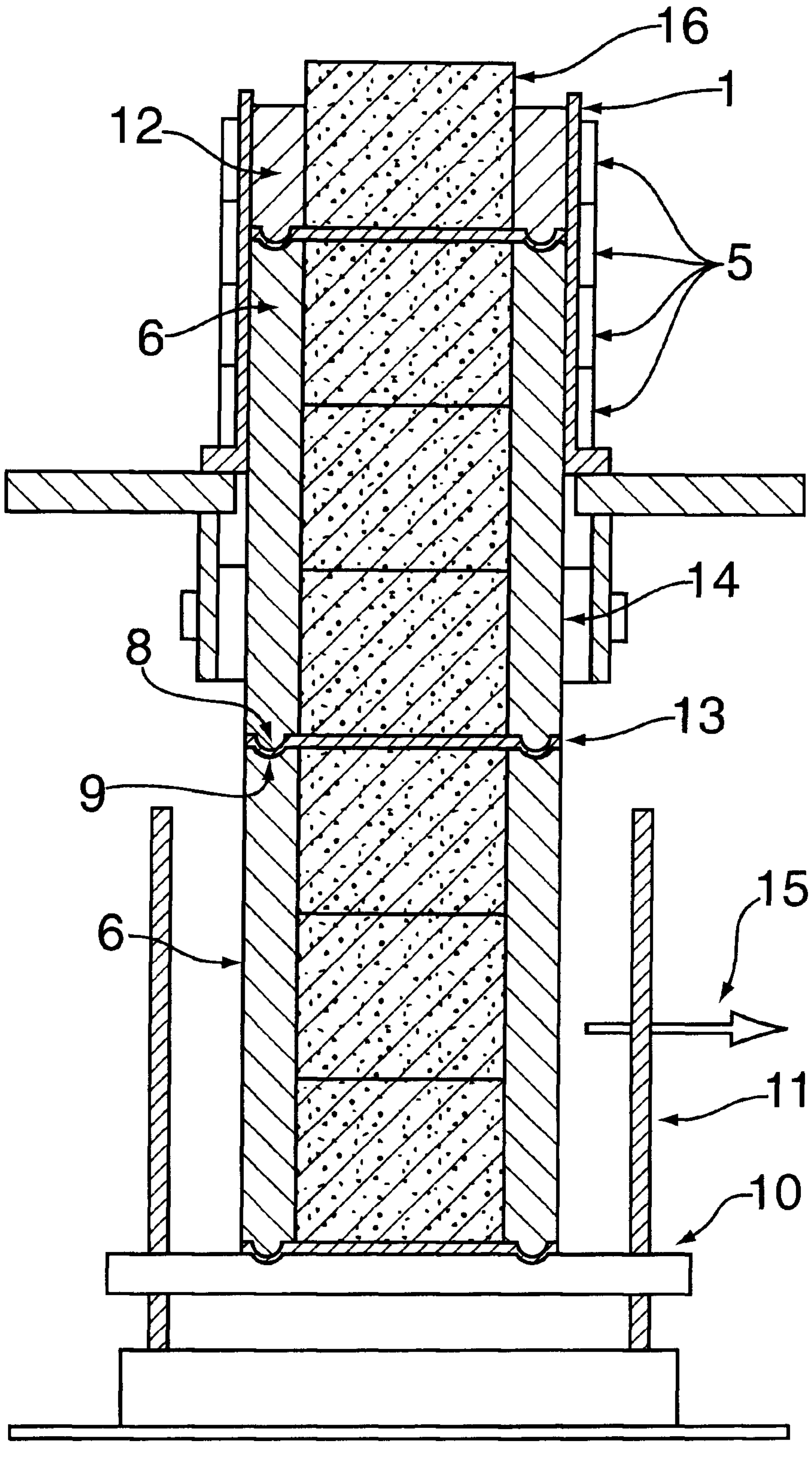

FIG. 6

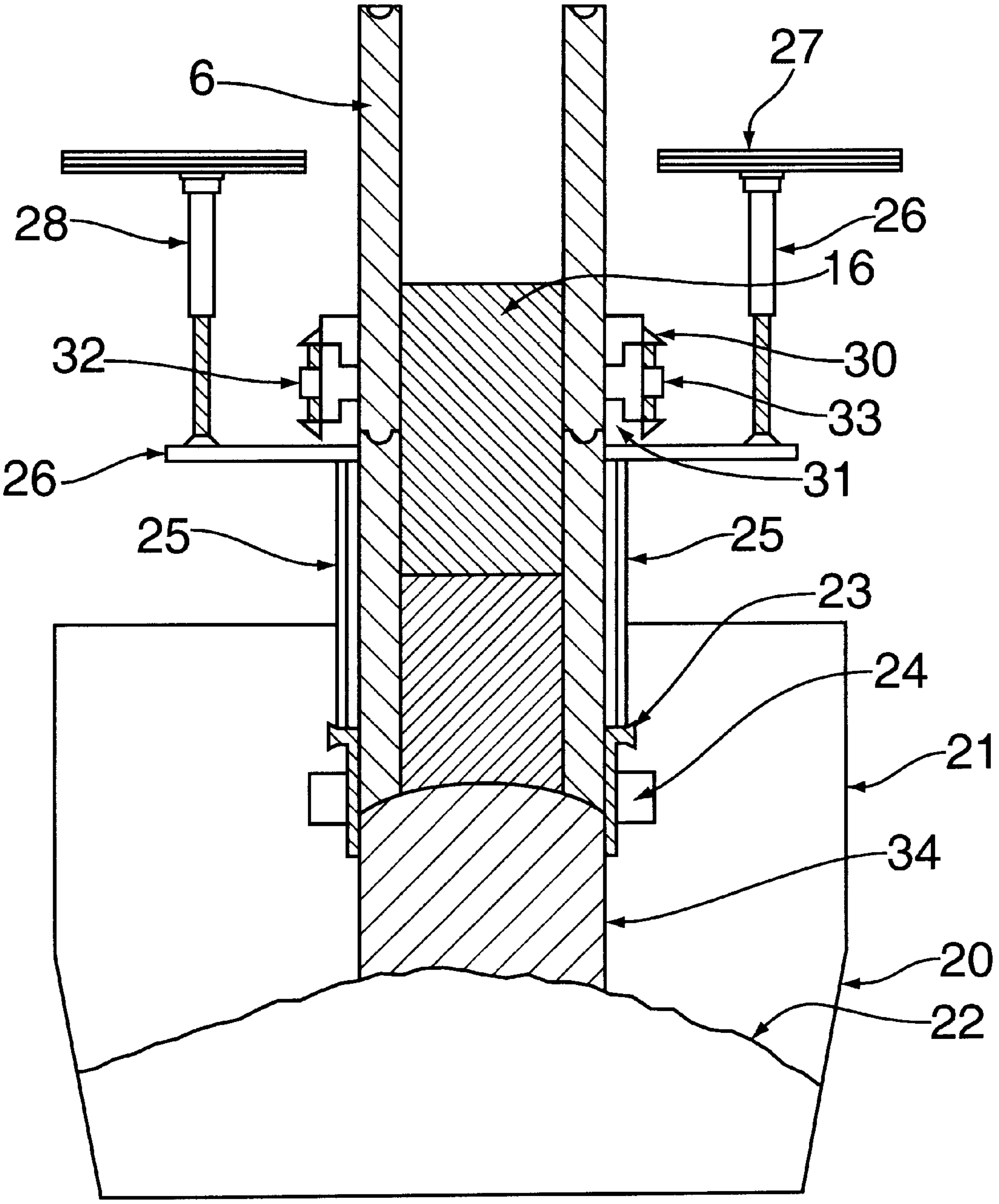

FIG. 7

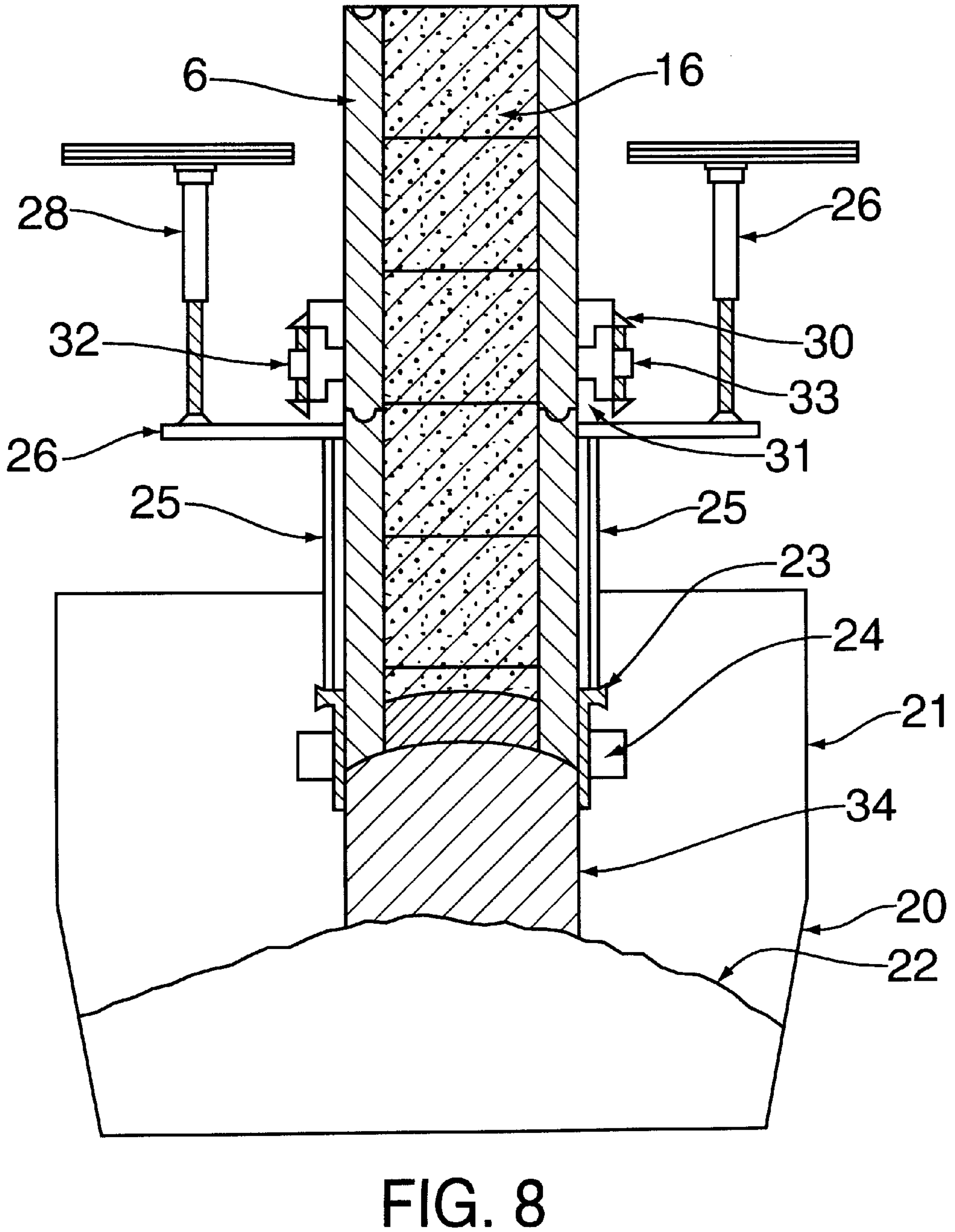

FIG. 8

METHOD FOR PRODUCTION OF CARBON ELECTRODES

TECHNICAL FIELD

The present invention relates to method for production of carbon electrodes for the use in electric smelting furnaces.

BACKGROUND ART

In electric smelting furnaces for production of ferro alloys, ferro phosphorus, pig iron, and other products it is to day mainly used self-baking carbon electrodes. Conventional self-baking electrodes comprise a vertical arranged electrode casing normally made from steel, extending through an opening in the furnace roof or hood. The upper end of the electrode casing is open in order to allow addition of unbaked carbonaceous electrode paste which upon heating softens and melts and is thereafter baked into a solid carbon electrode due to heat evolved in the paste in the area of supply of electric operating current to the electrode. As the electrode is consumed in the furnace the electrode is lowered and new sections of casing are installed on the top of the electrode column and further unbaked electrode paste is added.

Conventional electrodes of this type are equipped with inner, vertical metallic ribs affixed to the inner surface of the electrode casing which ribs extend radially towards the centre of the electrode. When a new section of electrode casing is installed at the top of the electrode column, the ribs are welded to the ribs in the casing below in order to obtain continuous ribs in vertical direction. The ribs serve as a reinforcement for the baked electrode and to conduct electric current and heat radially into the electrode paste during the baking process. To compensate for the consumption of the electrode, the electrode is lowered downwardly into the furnace by means of electrode holding and slipping means.

When conventional electrodes of this type are used, the electrode casing and the inner ribs melt when the electrode is being consumed in the furnace. The metal content of the casing and the ribs is thus transferred to the product produced in the smelting furnace. As the electrode casing and the inner ribs usually are made from steel, such conventional self-baking electrodes can not be used for electric smelting furnaces for the production of silicon or for the production of ferro-silicon having a high silicon content, as the iron content in the produced product will become unacceptably high.

For processes where iron contaminates the product to be produced it has conventionally been used prebaked carbon electrodes which are produced in suitable lengths outside the smelting furnace and added to the top of the electrode column by means of threads or threaded nipples. It is also known to use modifications of conventional self-baking electrodes where contamination of the product in the furnaces with iron from the casing and the ribs are avoided or reduced.

Pre-baked electrodes are normally produced by forming sections of electrodes from a carbonaceous electrode paste, whereafter the formed complete electrode sections are subjected to heat treatment in order to bake the electrode paste into a solid carbon electrode. Such a method of production requires a long period of heat treatment and the temperature has to be closely regulated during heating and during cooling in order to prevent crack formation in the finished electrode length. Further, the baked electrode has to be machined in order to obtain an acceptable surface finish and to make threads in the ends of each electrode length. Prebaked electrodes produced in this way are therefore very costly.

In Norwegian patent No. 154860 it is disclosed a method for continuous production of elongated carbon bodies which bodies are cut into suitable lengths and which are used in the same way as prebaked electrodes after machining and threading. In this method electrode paste supplied to a casing is baked by lowering the casing containing unbaked electrode paste continuously or substantially continuously through a baking furnace which is heated to a temperature of between 700 and 1300° C. by external supply of heat and by combustion of gases which evolve during the baking. Also this kind of electrodes have the disadvantage that they have to be machined and treaded before they can be used as electrodes in smelting furnace.

A number of modifications of the conventional self-baking electrode have been proposed in order to avoid contamination of the product produced in the smelting furnace. Thus in Norwegian patent No. 149451 it is disclosed a self-baking electrode wherein an electrode paste with a tar-based binder contained in a casing having no inner vertical ribs, is baked above the area where electric operating current is supplied to the electrode and where the casing is removed after baking of the electrode, but before the electrode reaches the area where electric operating current is supplied to the electrode. In this way a casing and rib free electrode can be produced. This kind of electrode has been used in smelting furnaces for the production of silicon, but has the disadvantage compared to conventional prebaked electrodes that it needs costly apparatuses for baking of the electrode as the electrode in the area of baking has to be heated to a temperature in the range of 700–1000° C. Further, as gases containing polyaromatic hydro-carbon compounds (PAH) evolve during baking, the apparatus has to be equipped with means for collecting and destructing the PAH compounds. Finally, it has to be arranged devices for removal of the casing after the electrode has been baked.

U.S. Pat. No. 4,692,929 discloses a self-baking electrode which is useful in the production of silicon. The electrode comprises a permanent metal casing having no inner ribs and a support structure for the electrode comprising carbon fibres, where the electrode paste is baked about the support structure and where the baked electrode is held by the support structure. This electrode has the disadvantage that separate holding means have to be arranged above the top of the electrode in order to hold the electrode by means of the support structure made from carbon fibres.

U.S. Pat. No. 4,575,856 discloses a self-baking electrode having a permanent casing having no inner ribs where the electrode paste is baked about a central graphite core and where the electrode is held be the graphite core. This electrode has the same disadvantage as the electrode disclosed in U.S. Pat. No. 4,692,929, but in addition the graphite core is subjected to breakage when the electrode is subjected to horizontal forces.

The above mentioned methods for producing self-baking electrodes having no inner metal ribs all have the disadvantage the they can not be used for electrodes having a diameter above about 1.2 m without a substantial increased risk of electrode breakage. In contrast, conventional self baking electrodes may have a diameter of up to 2.0 m.

In the production of all the above mentioned types of carbon electrodes it is used a carbonaceous electrode paste comprising a particulate solid carbon material, preferably anthracite, and a tar-based binder. This electrode paste is solid at room temperature. Upon heating, the paste starts to soften at a temperature in the range of 50–150° C. as the tar-based binder starts to melt at this temperature. Upon further heating to about 500° C. the paste starts to bake, and a complete baking to a solid carbonaceous body takes place at a temperature above about 800° C.

DISCLOSURE OF INVENTION

In spite of the above mentioned methods and apparatuses for production of self-baking electrodes in order to avoid iron contamination of the product which is produced in the furnace, it is still a need for a reliable method and apparatus for production of self-baking carbon electrodes whereby the disadvantages of the known methods can be overcome.

Accordingly, the present invention relates to a method for production of a carbon electrodes which method is characterised in that a first unbaked carbonaceous electrode paste containing a binder which cures at a temperature below 500° C. is supplied to a an annulus between a curing chamber having an inner cross-section corresponding to the cross-section of to the electrode which is to be produced and an inner mould material, curing of the first electrode paste by means of supplying heat to the curing chamber, removing of elongated sections of the cured first electrode paste from the curing chamber, installing lengths of the cured first electrode paste on the top of the electrode column in an electric smelting furnace, optionally supplying a second electrode paste to the central opening of the cured body of the first electrode paste, whereby the cured body of the first electrode paste and the second electrode paste are baked into a solid carbon electrode in the area of supplying electric operating current to the electrode.

According to a first embodiment the inner mould material is made from metal, carbon or from a ceramic material which is removed after curing of the first electrode paste. An elongated cured body having a central opening extending therethrough is thereby formed. The cured body is then mounted on the top of the electrode column in an electric smelting furnace, whereafter the second carbonaceous electrode paste, preferably containing a tar-based binder, is supplied to the central opening in the cured body of the first electrode paste. As the electrode is consumed in the furnace, the electrode is slipped downwards through conventional electrode holding—and slipping means, and when the cured body of the first electrode paste reaches the area of the electrode electric current supply means, the cured body and the second electrode paste contained in the cured body are baked into a monolithic solid carbon electrode.

According to a second embodiment the inner mould material in the curing chamber consists of unbaked blocks of the second electrode paste containing a binder which cures a higher temperature than the binder in the first electrode paste, preferably a tar-based binder. During heating and curing of the first electrode paste, the blocks of the second electrode paste will be substantially unaffected. The cured body of the first electrode paste which is removed form the curing chamber will thereby contain unbaked blocks of the second electrode paste in its centre. When the cured body is mounted at the top of the electrode column of the smelting furnace, the blocks of the second electrode paste are baked in the area where electric current is supply to the electrode and forms a monolithic solid electrode with the cured body of the first electrode paste.

The production of the cured body of the first electrode paste can be both discontinuous and continuous. By discontinuous production the annulus between the curing chamber and the inner mould material is filled with the first electrode paste whereafter heat is supplied to the curing chamber for a time necessary to effect curing of the first electrode paste. After cooling, the cured body of the first electrode paste is removed from the curing chamber whereafter the curing chamber again is filled with the first electrode paste for production of another cured body.

By continuous production of cured bodies of the first electrode paste, the heat supply to the curing chamber is kept substantially constant and the cured body is lowered through the curing chamber at a constant or substantially constant rate, while unbaked electrode paste is supplied to the annulus between the curing chamber and the inner mould material. When the inner mould material comprises blocks of the second electrode paste, new blocks of the second electrode paste are placed on the top of the lower blocks in order to maintain the mould material in the curing chamber as the cured body is lowered down through the curing chamber. By continuous production of the cured bodies of the first electrode paste, the continuous body is divided into suitable lengths below the curing chamber, preferably by inserting horizontal partition sheets in the curing chamber at suitable intervals.

The bodies of the cured first electrode paste is mounted on the top of the electrode column by using conventional glue for gluing carbon parts. In order to ensure a good connection and centering of the bodies of the first electrode paste to each other when mounting on the electrode column, the bodies of the cured first electrode paste are made with a ring-shaped upwardly extending bulb in one end and with a corresponding ring-shaped groove in the other end, whereby the bulb on one cured body is intended to fit into the groove on the next cured body. In this way the contact area upon gluing is increased at the same time as the stability against horizontal forces is increased when the bodies are mounted in the electrode column in a melting furnace.

The bulbs respectively the grooves, can in a simple way be made by forming bulbs and grooves on the partition sheets which are used during the continuous production of the cured bodies of the first electrode paste.

The first electrode paste is preferably an electrode paste containing a resin-based binder. Such binders cure at a temperature between 120° C. and 500° C. and during curing it is obtained bodies having a sufficient mechanical strength in order to withstand the forces they are subjected to in an electrode column in electric smelting furnaces. The cured bodies of the first electrode paste will have a sufficient electric and thermal conductivity in order to supply electric current via conventional current supply means in the area of supplying electric operating current to the electrode.

The radial thickness of the cured body of the first electrode paste is adjusted according to the electrode diameter with an increased thickness with increased electrode diameter. It is, however, preferred that the radial thickness is at least 1 cm. The cured body of the first electrode paste has, however, normally a radial thickness of at least 5 cm and preferably more than 10 cm.

The carbon electrode according to the present invention shows a number of advantages compared to known carbon electrodes. Thus the electrode has no iron casing and no iron ribs and can therefore be used in processes where iron will contaminate the product produced in the furnace. The electrode will, after final baking in the area of electric current supply to the electrode, have no joints, as the second electrode paste in the centre of the electrode will from a true continuous electrode. The risk of electrode breakage is thereby substantially reduced compared to prebaked electrodes where each electrode length is mounted on the electrode column by means of thread connections. Further the use of a resin-based paste as the first electrode paste provides a smooth surface during curing of the body of the first electrode paste in the curing chamber, making it unnecessary to machine the outer surface.

The electrode produced according to the present invention can be installed in existing furnaces as existing holding and slipping equipment and electric current supply means can be used without modifications.

BRIEF DESCRIPTION OF DRAWINGS

FIG. **1** shows a first embodiment for production of cured bodies of the first electrode paste,

FIG. **2** is a view along line I—I in FIG. **1**,

FIG. **3** shows a second embodiment for production of cured bodies of the first electrode paste,

FIG. **4** shows a third embodiment for production of cured bodies of the first electrode paste,

FIG. **5** shows a view along line II—II in FIG. **4**,

FIG. **6** shows a fourth embodiment for production of cured bodies of the fist electrode paste,

FIG. **7** shows a first embodiment for mounting the cured bodies and final production of electrodes in connection with a smelting furnace, and where,

FIG. **8** shows a second embodiment for mounting and final production of electrode in connection with a smelting furnace.

DETAILED DESCRIPTION OF PREFERRED EMBODIMENTS

In FIG. **1** and **2** there is shown schematically discontinuous production of cured bodies of a first electrode paste.

In FIG. **1** and **2** there is shown a curing chamber **1** having an inner diameter corresponding to the electrode to be produced. The curing chamber **1** rests on a base support **2**. An inner mould material **3** forms an annular elongated mould **4** between the curing chamber **1** and the inner mould material **3**. A first electrode paste containing a binder which cures at a temperature of below 500° C., preferably a resin-based binder, is filled into the mould **4**, whereafter the paste is heated to curing, temperature by means of electric heating elements **5** or by other known heating means for supply of heat energy, arranged in the curing chamber **1**, whereby the first electrode paste is cured to a ring-shaped cured body **6**. In order to ensure that a horizontal surface is obtained the top of the cured body **6**, a horizontal sheet **7** is placed upon the top of the first electrode paste prior to curing. The horizontal sheet **7** has preferably a ring-shaped bulb **8** on its lower side in order to from a ring-shaped groove in the cured body **6**, and a ring shaped groove on its upper side in order to form a downward extending bulb in the cured body **6**. After cooling the cured body **6**, is removed from the curing chamber **1**.

In FIG. **3** there is shown continuous production of cured bodies **6** of the first electrode paste. In FIG. **3** parts corresponding to parts in FIGS. **1** and **2** have identical reference numerals. The method shown in FIG. **3** differs from the method shown in FIGS. **1** and **2** in that the cured body **6** rests on a table **10** which can be moved in vertical direction. The table **10** can be moved vertically by means of threaded spindles **11**. At start of the curing the table **10** is in its upper position constituting a bottom in the curing chamber **1**. The first electrode paste **12** is supplied to the annulus between the curing chamber **1** an the inner mould material **3** whereafter the electrode paste is heated by means of heat energy supplied by the heating elements **5** in the curing chamber **1**.

When the curing starts, the table **10** is lowered with a constant or a substantially constant rate while further electrode paste **12** is supplied to the top of the curing chamber **1**. In order to divide the cured body into suitable lengths, partition sheets **13** is inserted at intervals. When the table **10** has been lowered such a distance that one length of cured body **6** has been completely lowered down through the curing chamber **1**, the part of the cured body **6** inside the curing chamber **1** is held by means of pressure means **14**, whereafter the table **10** with the finished cured body **6** is removed as suggested by the arrow **15**. The table **10** is thereafter lifted to its upper position, whereafter lowering of the table **10** with cured body **6** is continued.

The partition sheets **13** is at its upper side equipped with a ring shaped groove **8** and is on its lower side equipped with a downwardly extending ring-shaped bulb in order to form a groove respectively bulb in the top and in the bottom of each of the cured bodies **6**.

In FIGS. **4**,**5** and **6** there is shown an embodiment for discontinuous, respectively continuous production of cured bodies **6** which only differs from the embodiments shown in FIGS. **1** and **3** in that the inner mould material is made from blocks **16** of a second carbonaceous electrode paste containing a binder which cures at a higher temperature than the binder in the first electrode paste. During curing of the first electrode paste in the curing chamber **1** the blocks **16** of the second electrode paste are substantially unaffected. The blocks **16** will thereby form an integral central part of the cured bodies **6**.

In FIG. **7** there is shown an embodiment for mounting of the cured bodies **6** produced by the methods shown in FIGS. **1** and **3** on the top of an electrode column in an electric smelting furnace, and final production of the carbon electrode.

On FIG. **7** there is shown in electric smelting furnace **20**. The smelting furnace **20** is equipped with a smoke-hood **21** and the charge level in the furnace is suggested by reference number **22**. Contact clamps for supply of electric operating current to the furnace are shown by reference numeral **23**. The contact clamps **23** are pressed against the electrode by means of a pressure ring **24**. The contact clamps **23** and the pressure ring **24** is in conventional way equipped with internal channels for circulation of a cooling liquid. The contact clamps **23** are via rails **25** suspended from an electrode frame **26**.

The electrode frame **26** is in conventional way suspended in the building construction **27** by means of hydraulic electrode regulation cylinders **28**, **29**. On the electrode frame **26** there is further arranged electrode holding and slipping rings **30**, **31**. The upper holding and slipping ring **30** can be moved in vertical direction by means of hydraulic or pneumatic cylinders **32**,**33**.

Cured bodies **6**, produced according to the embodiments shown in FIGS. **1** and **3** as described above, are mounted on the top of the electrode column and connected to the cured body **6** below by gluing. Electrode paste in the form of briquettes or cylinders is charged to the hollow cured bodies **6**. When the electrode paste enters the area of the contact clamps **23** for supply of electric operating current to the furnace **20**, heat will be generated in the cured body **6** and in the electrode paste. The cured body **6** and the electrode paste contained therein will thereby be baked into a solid monotithic carbon electrode **34**.

In FIG. **8** there is shown an embodiment for mounting of cured bodies **6** produced according to the method shown in FIG. **4** and **6** to the top of the electrode column in an electric smelting furnace. In FIG. **8** parts corresponding to parts in FIG. **7** have been given the same reference numerals. In the embodiment shown in FIG. **8** the cured bodies **6** are mounted in the same way as described above in connection with FIG. **7**. The cured bodies **6** arena however, already filled with blocks **16** of the second electrode paste. When the cured bodies **6** enters the area of the contact clamps **23**, the cured bodies **6** and the blocks **16** of the second electrode paste will be baked into a solid monolithic carbon electrode **34**.

We claim:

1. A method for production of a carbon electrode, comprising the steps of:

supplying a first unbaked carbonaceous electrode paste containing a binder which cures at a temperature below about 500° C. to an annulus defined by an inner wall of a curing chamber and an inner mold material, said curing chamber having an inner cross-section corresponding to the cross-section of the electrode which is to be produced,

curing of the first electrode paste by means of supplying heat to the curing chamber so as to form a cured body from the first electrode paste, said cured body having a central opening therein,

removing the cured body from the curing chamber,

installing the cured body on the top of an electrode in an electric smelting furnace,

supplying a second electrode paste to the central opening of the cured body,

supplying operating electric current to the electrode whereby the cured body and the second electrode paste are baked into a solid carbon electrode in the area electric current is supplied to the electrode.

2. The method according to claim **1**, wherein the inner mold material is made from metal, carbon or a ceramic material which is removed after curing of the first electrode paste.

3. A method for production of a carbon electrode comprising the steps of:

supplying a first unbaked carbonaceous electrode paste containing a binder which cures at a temperature below about 500° C. to an annulus defined by an inner wall of a curing chamber and one or more unbaked blocks of a second electrode paste containing a binder which cures at a higher temperature than the binder in the first electrode paste, said curing chamber having an inner cross-section corresponding to the cross-section of the electrode which is to be produced,

curing of the first electrode paste by means of supplying heat to the curing chamber so as to form a cured body from the first electrode paste said second electrode paste being substantially uneffected during the heating and curing of the first electrode paste in the curing chamber,

removing the cured body and said blocks of uncured second electrode paste from the curing chamber,

installing the cured body and said blocks on the top of an electrode in an electric smelting furnace,

supplying operating electric current to the electrode whereby the cured body and the uncured blocks of said second electrode paste are baked into a solid carbon electrode in the area electric current is supplied to the electrode.

4. The method according to claim **1** wherein the cured body is produced by completely filling the annulus between the curing chamber and the inner mold material with the first electrode paste, whereafter heat is supplied to the curing chamber for a time necessary to effect curing of the first electrode paste and removing the cured body of the first electrode paste from the curing chamber, whereafter the annulus of the curing chamber again is filled with the first electrode paste for production of another cured body.

5. The method according to claim **1** wherein the cured body of the first electrode paste is produced by keeping the heat supply to the curing chamber substantially constant and lowering the cured body through the curing chamber at a constant or substantially constant rate, while further uncured first electrode paste is supplied to the annulus between the curing chamber and the inner mold material.

6. The method according to claim **5** wherein the cured body of the first electrode paste is divided into suitable lengths below the curing chamber.

7. The method according to claim **6** wherein the cured body is divided into suitable lengths by inserting horizontal partition sheets in the curing chamber at suitable intervals.

8. The method according to claim **1** wherein the cured body is mounted on the top of the electrode in the electric smelting furnace by gluing.

9. The method according to claim **3** wherein the cured body and said blocks of uncured second electrode paste is produced by completely filling the annulus between the curing chamber and the uncured second electrode paste with the first electrode paste, whereafter heat is supplied to the curing chamber for a time necessary to effect curing of the first electrode paste, and removing the cured body and said blocks of uncured second electrode paste from the curing chamber, whereafter the curing chamber again is filled with the first electrode paste and said blocks of uncured second electrode paste for production of another cured body and blocks of uncured said second electrode paste.

10. The method according to claim **3** wherein the cured body and said blocks of uncured second electrode paste is produced by keeping the heat supply to the curing chamber substantially constant and lowering the cured body and said blocks of uncured second electrode paste through the curing chamber at a constant or substantially constant rate, while further blocks of uncured second electrode paste is supplied to the curing chamber to form the annulus and uncured first electrode paste is added to the annulus.

11. The method according to claim **3** wherein the cured body and said blocks of uncured second electrode paste is divided into suitable lengths below the curing chamber.

12. The method according to claim **11** wherein the cured body and said blocks of uncured second electrode paste is divided into suitable lengths by inserting horizontal partition sheets in the curing chamber at suitable intervals.

13. The method according to claim **3** wherein the cured body and said blocks of uncured second electrode paste is mounted on the top of the electrode column in the electric smelting furnace by gluing one cured body to another cured body.

14. A carbon electrode comprising:

(a) a top portion comprising:

(a1) a cured body of a first electrode paste wherein said first electrode paste cured at a temperature below about 500° C., said cured body having a central opening therein; and

(a2) an uncured second electrode paste, said second electrode paste curing at a temperature above the temperature at which said first electrode paste, said second electrode paste being located in said central opening of the cured body; and

(b) a bottom portion comprising a solid monolithic carbon electrode.

15. The electrode of claim **14** wherein said cured body has a thickness of at least 5 cm.

16. A carbon electrode precursor used for making an electrode in a furnace comprising:

a cured body of a first electrode paste wherein said first electrode paste cured at a temperature below about 500° C., said cured body having a central opening therein; and

one or more blocks of an uncured second electrode paste, said second electrode paste curing at a temperature above the temperature at which said first electrode paste, said second electrode paste being located in said central opening of the cured body.

17. The electrode of claim **16** wherein said cured body has a thickness of at least 5 cm.

18. In an electric smelting furnace which employs one or more electrodes, the improvement comprising a carbon electrode having

(a) a top portion which comprises:

(a1) a cured body of a first electrode paste wherein said first electrode paste cured at a temperature below about 500° C., said cured body having a central opening therein; and

(a2) an uncured second electrode paste, said second electrode paste curing at a temperature above the temperature at which said first electrode paste, said second electrode paste being located in said central opening of the cured body; and

(b) a bottom portion which is a monolithic carbon electrode.

19. The furnace of claim **18** wherein said cured body of said electrode has a thickness of about 5 cm.

20. The furnace of claim **18** wherein silicon metal is produced.

* * * * *

US006602561B1

(12) United States Patent

Moro et al.

(10) **Patent No.: US 6,602,561 B1**

(45) **Date of Patent: Aug. 5, 2003**

(54) ELECTRODE FOR DISCHARGE SURFACE TREATMENT AND MANUFACTURING METHOD THEREFOR AND DISCHARGE SURFACE TREATMENT METHOD AND DEVICE

(75) Inventors: **Toshio Moro**, Tokyo (JP); **Akihiro Goto**, Tokyo (JP)

(73) Assignee: **Mitsubishi Denki Kabushiki Kaisha**, Tokyo (JP)

(*) Notice: Subject to any disclaimer, the term of this patent is extended or adjusted under 35 U.S.C. 154(b) by 0 days.

(21) Appl. No.: **09/462,793**

(22) PCT Filed: **May 13, 1999**

(86) PCT No.: **PCT/JP99/02460**

§ 371 (c)(1),
(2), (4) Date: **Jun. 20, 2000**

(87) PCT Pub. No.: **WO99/58744**

PCT Pub. Date: **Nov. 18, 1999**

(30) Foreign Application Priority Data

May 13, 1998	(JP)	10-130318
Oct. 23, 1998	(JP)	10-302020
Oct. 27, 1998	(JP)	10-304898

(51) **Int. Cl.**^{7} **B32B 35/00**; B23H 7/22; B23H 7/24; B29C 67/04

(52) **U.S. Cl.** .... **427/580**; 427/140; 427/142; 118/723 VE; 219/69.15; 219/69.17; 264/125; 142/224; 29/868; 29/DIG. 8; 29/DIG. 49

(58) **Field of Search** .... 427/540, 580, 427/140, 142; 148/224; 204/192.38, 298.41; 264/125; 29/825, 868, DIG. 8, DIG. 49; 118/723 E, 723 VE; 219/69.15, 69.16, 69.17

(56) References Cited

U.S. PATENT DOCUMENTS

3,553,527 A	*	1/1971	Gutsche	264/29.6
3,857,012 A	*	12/1974	Stegelman et al.	219/69 E
4,027,134 A	*	5/1977	Arakawa	219/69 E

(List continued on next page.)

FOREIGN PATENT DOCUMENTS

DE	44 36 663	4/1995
DE	44 42 161	3/1996
DE	197 01 170	7/1997

(List continued on next page.)

OTHER PUBLICATIONS

Translation of JP 62–127,448A (Sekiguchi) Jun. 1987.*

Translation of JP 59–107825A (Gotoo), Jun. 1984.*

Translation of German patent #44 42 161C1 (Prause), Mar. 1996.*

(List continued on next page.)

Primary Examiner—Marianne Padgett

(74) *Attorney, Agent, or Firm*—Sughrue Mion, PLLC

(57) ABSTRACT

A discharge surface treatment method with which discharge is caused to occur between an electrode and a workpiece to generate energy to form a coating on a surface of the workpiece, and method therefore. An electrode is made by combining a hard material, such as WC, and a soft material, such as Co. The hard and soft materials are mixed and compressed into a green compact. The green compact is baked in a vacuum furnace at a temperature which is below the sintering temperature but high enough to melt the soft material. The melted soft material fills the gaps between the particles of the hard material, resulting in an electrode having a texture similar to chalk called incomplete-sintering. The electrode is then used in discharge surface treatment.

24 Claims, 21 Drawing Sheets

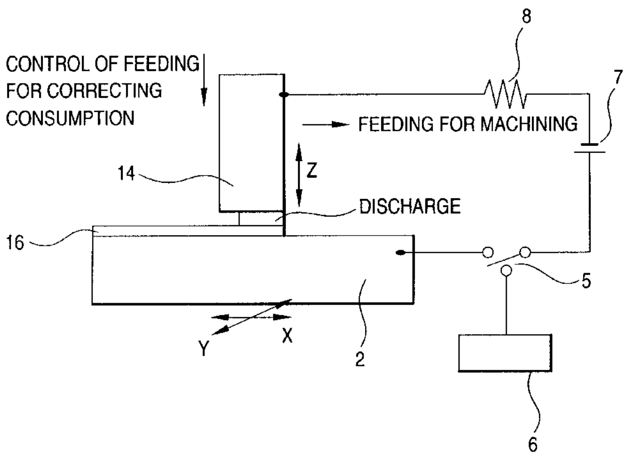

U.S. PATENT DOCUMENTS

4,153,755	A	*	5/1979	Rothkegel et al.	428/569
4,373,127	A	*	2/1983	Haskett et al.	219/69 E
4,649,086	A	*	3/1987	Johnson	427/580
RE32,464	E	*	7/1987	Aine	
4,978,556	A	*	12/1990	Pinkahsov	427/580
5,010,563	A	*	4/1991	Laurent et al.	378/132
5,651,901	A		7/1997	Mohri et al.	219/69.17
5,736,076	A	*	4/1998	Meissner et al.	
5,858,479	A	*	1/1999	Saito et al.	427/580
6,086,684	A	*	7/2000	Saito et al.	427/580
6,437,278	B1	*	8/2002	Inoue et al.	219/69.15
6,441,333	B1	*	8/2002	Goto et al.	219/69.15
6,492,611	B2	*	12/2002	Goto et al.	219/69.17

FOREIGN PATENT DOCUMENTS

JP	359107825	A	*	6/1984	
JP	62-116741			5/1987	C22C/9/00
JP	62127448	A	*	6/1987	
JP	7-112329			5/1995	B23H/9/00
JP	7-197275			8/1995	C23C/26/00
JP	7-278781			10/1995	C23C/4/12
JP	HEI. 8-300227			11/1996	
JP	9-108834			4/1997	B23K/9/04
JP	9-192937			7/1997	B23H/9/00
JP	10-512			1/1998	B23H/9/00

OTHER PUBLICATIONS

Translation of JP 8–300227 (Saito et al), Nov. 1996.*

Translation of JP 11–827 (Saito et al), Jan. 1999.*

Hawley's Condensed Chemical Dictionary, 12th Edition, R.J. Lewis, Sr. Ed., Van Nostrand Reinhold Co., NY; p. 871 p526, 1993 No Month.*

Abstract Only—No Patent Document Supplied for JP6212447 Jun. 9, 1987, to Sekicuchi Shigeaki.

* cited by examiner

FIG. 1 (a)

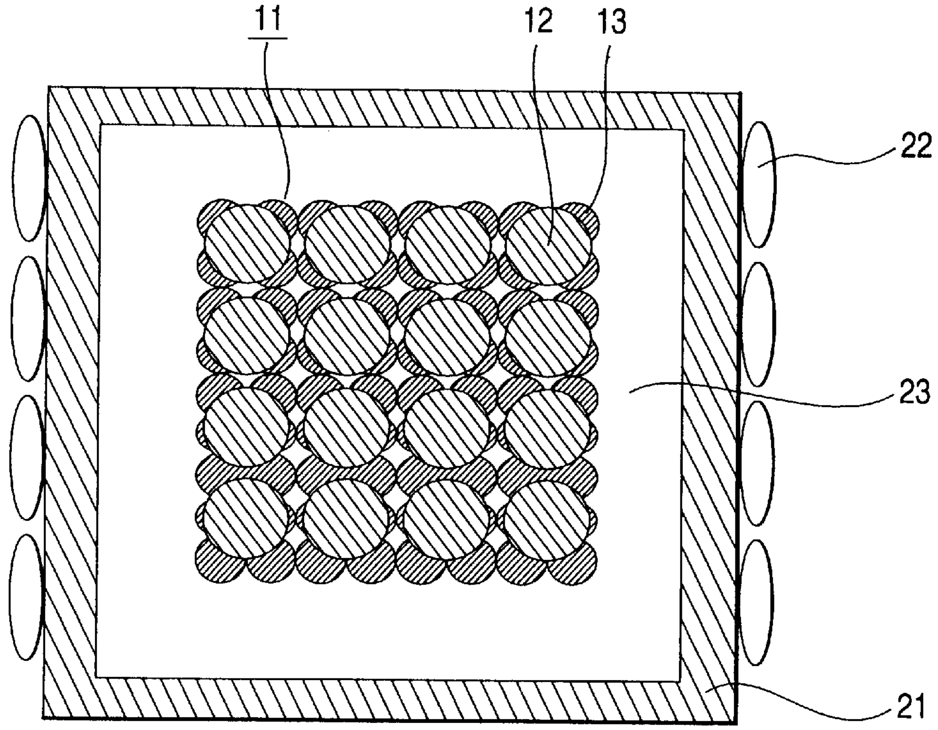

FIG. 1 (b)

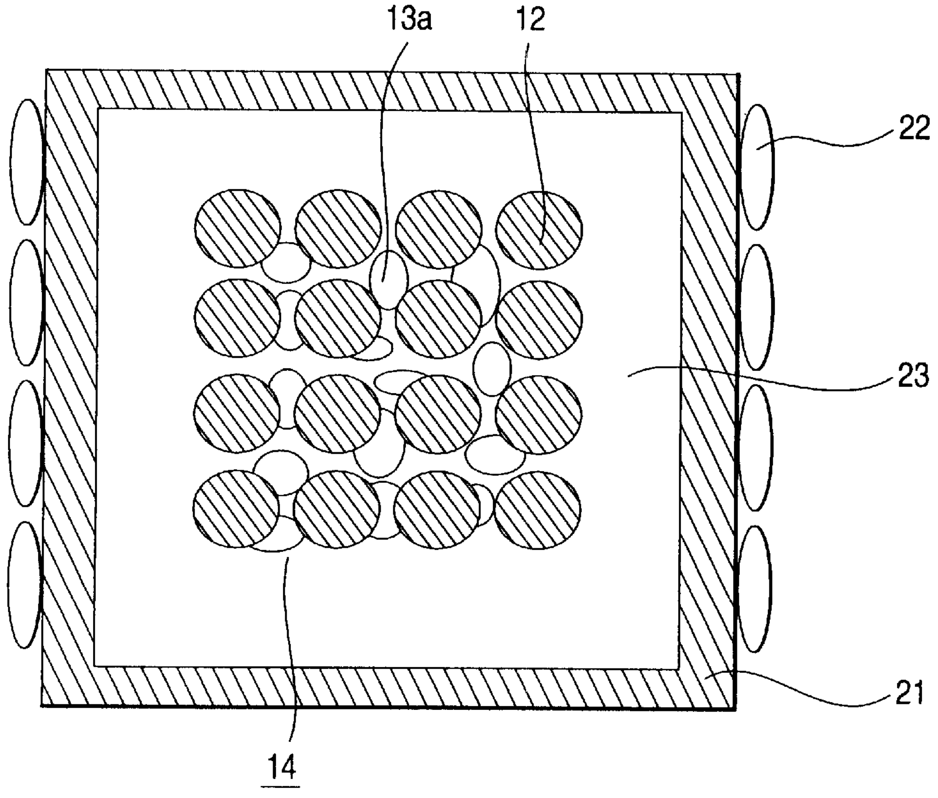

FIG. 2 (a)

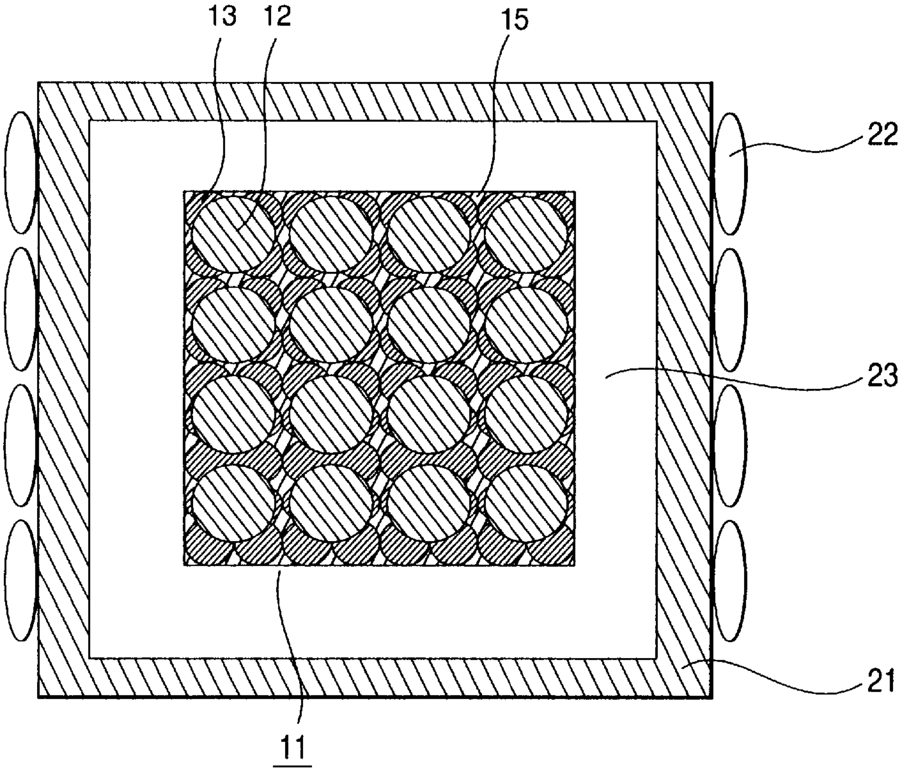

FIG. 2 (b)

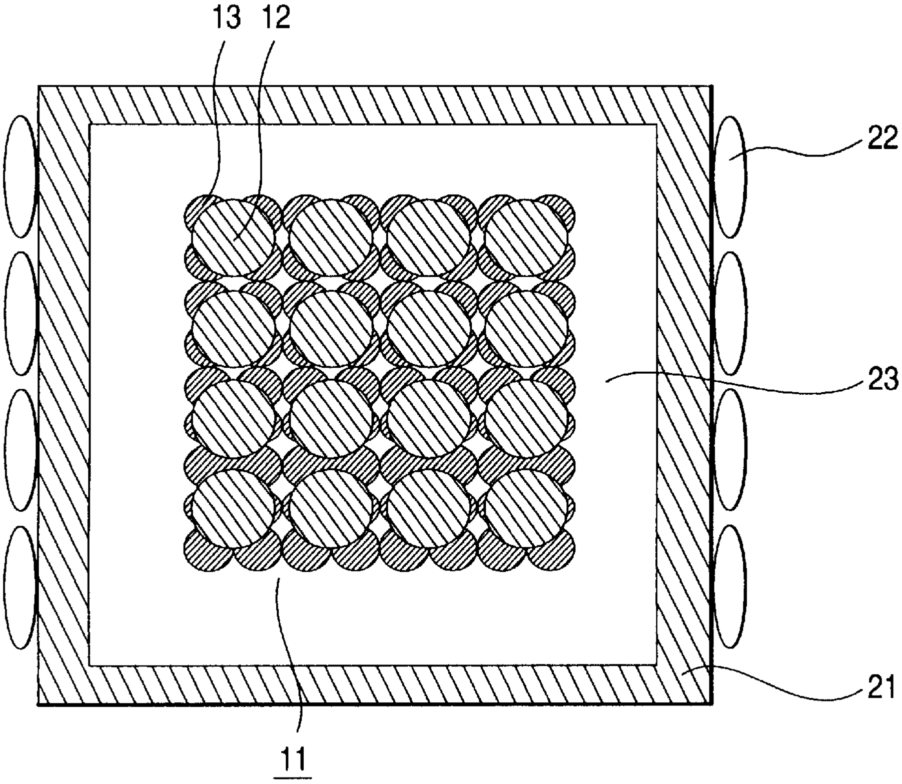

FIG. 3

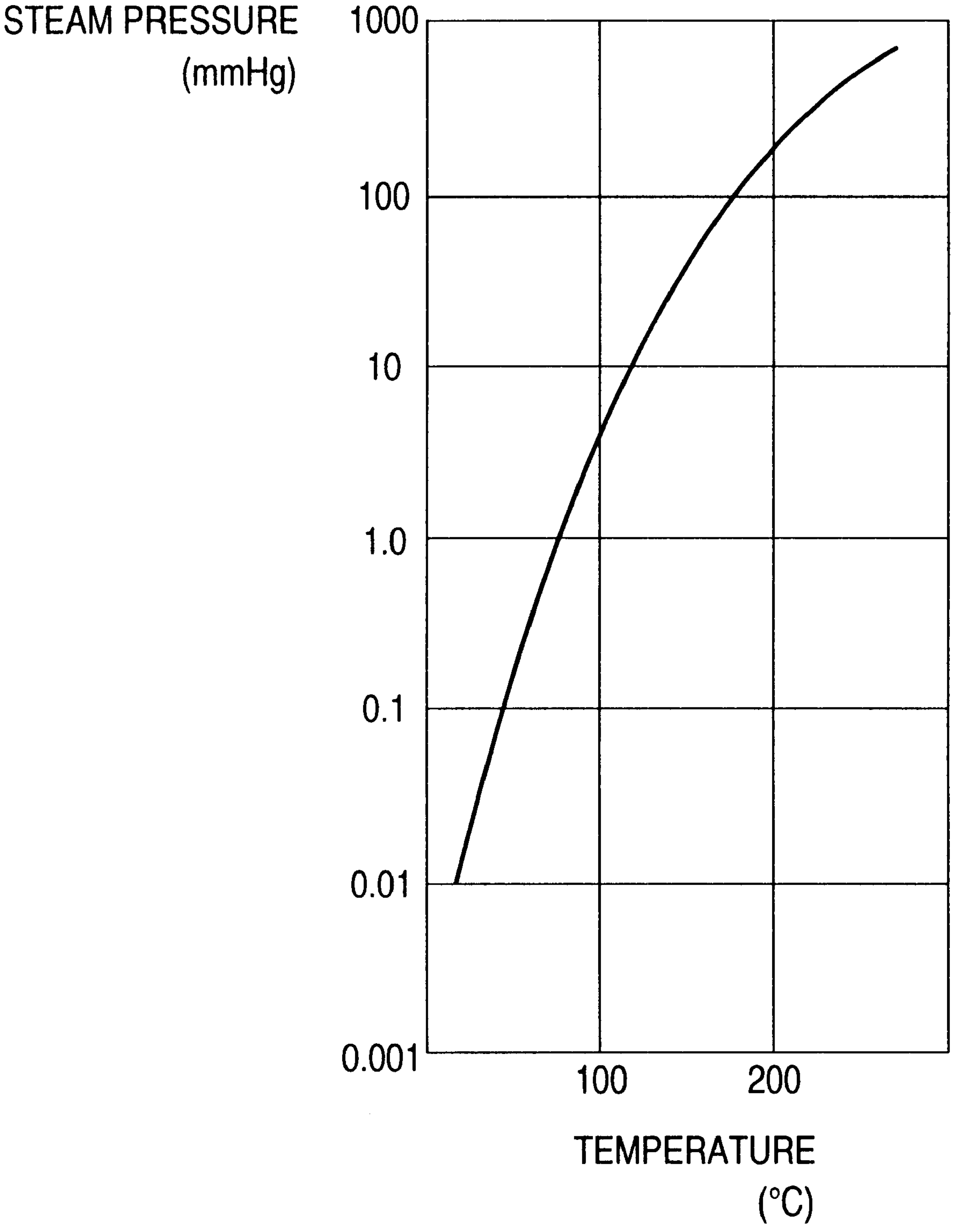
STEAM PRESSURE
(mmHg)
1000
100
10
1.0
0.1
0.01
0.001
100
200
TEMPERATURE
(°C)

FIG. 4

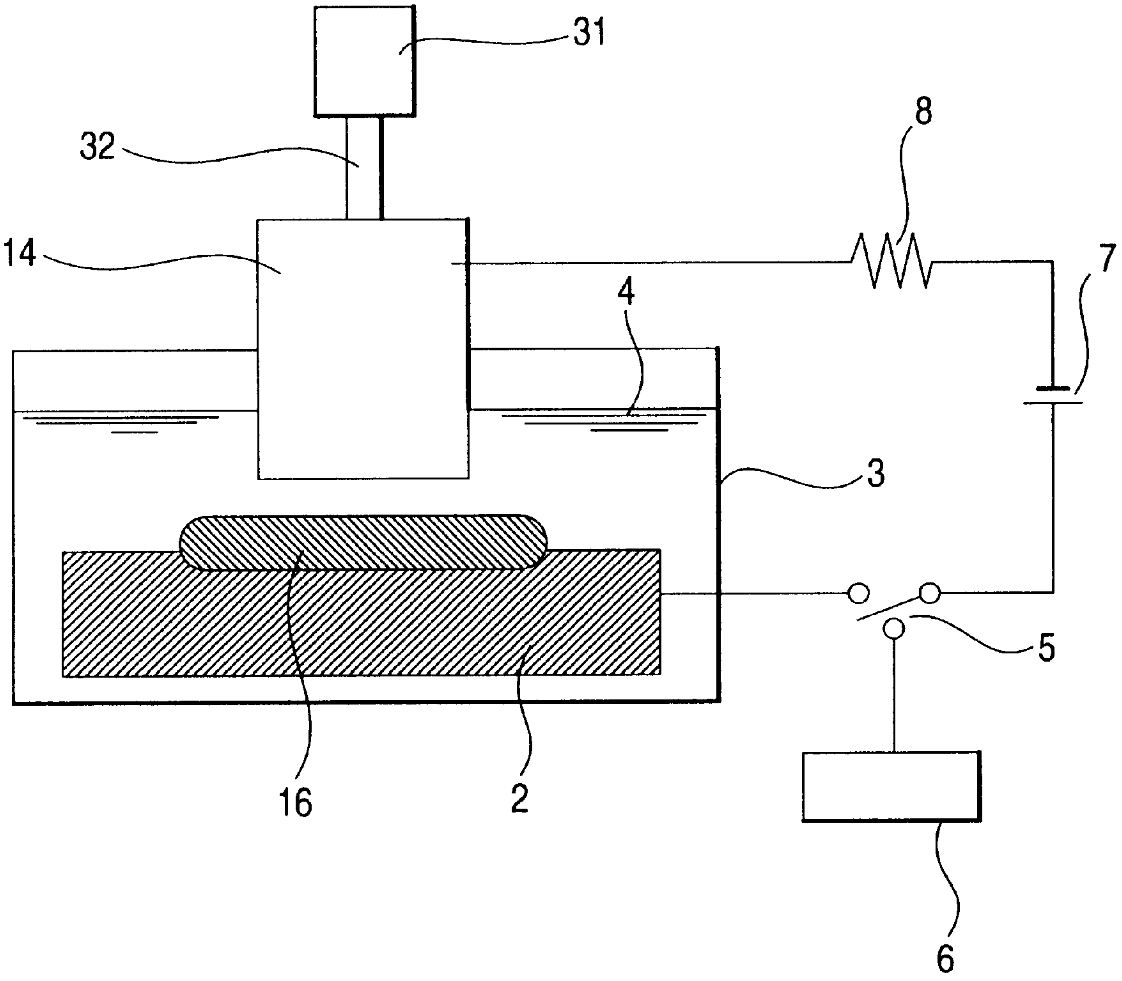

FIG. 5

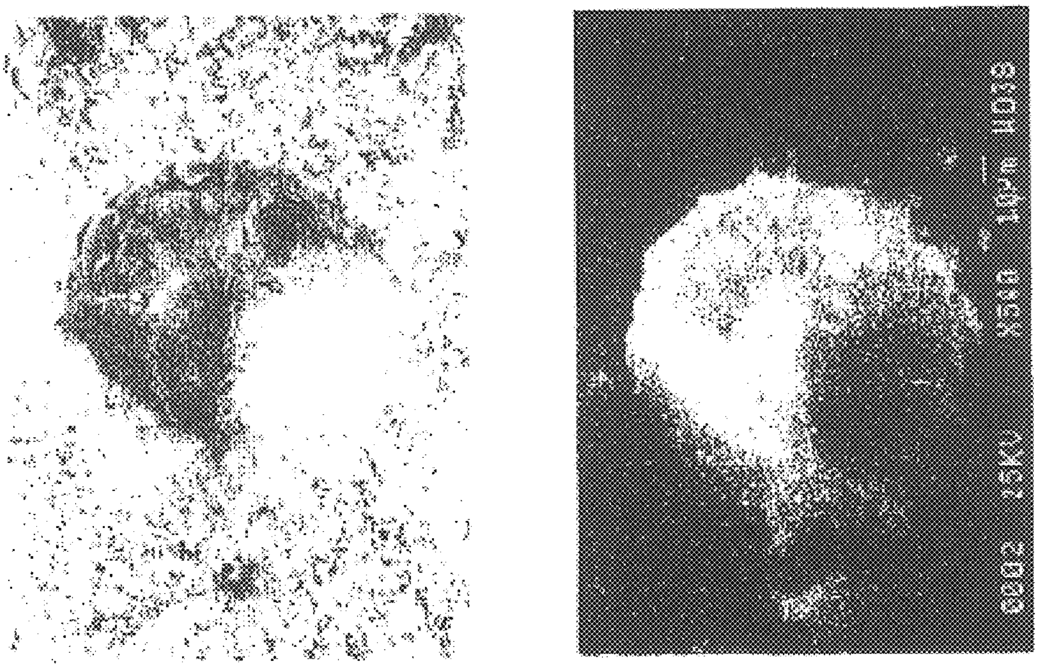

IMAGE OF SEI

IMAGE OF Ti-Kα

FIG. 6

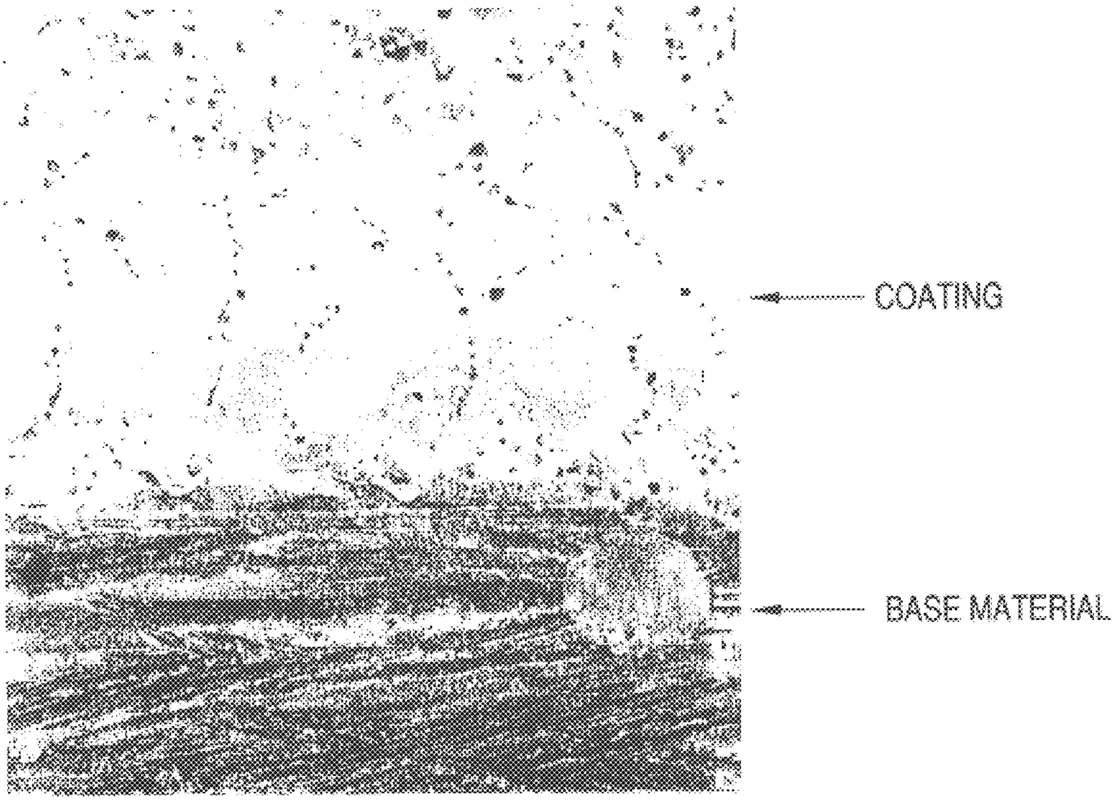

FIG. 7

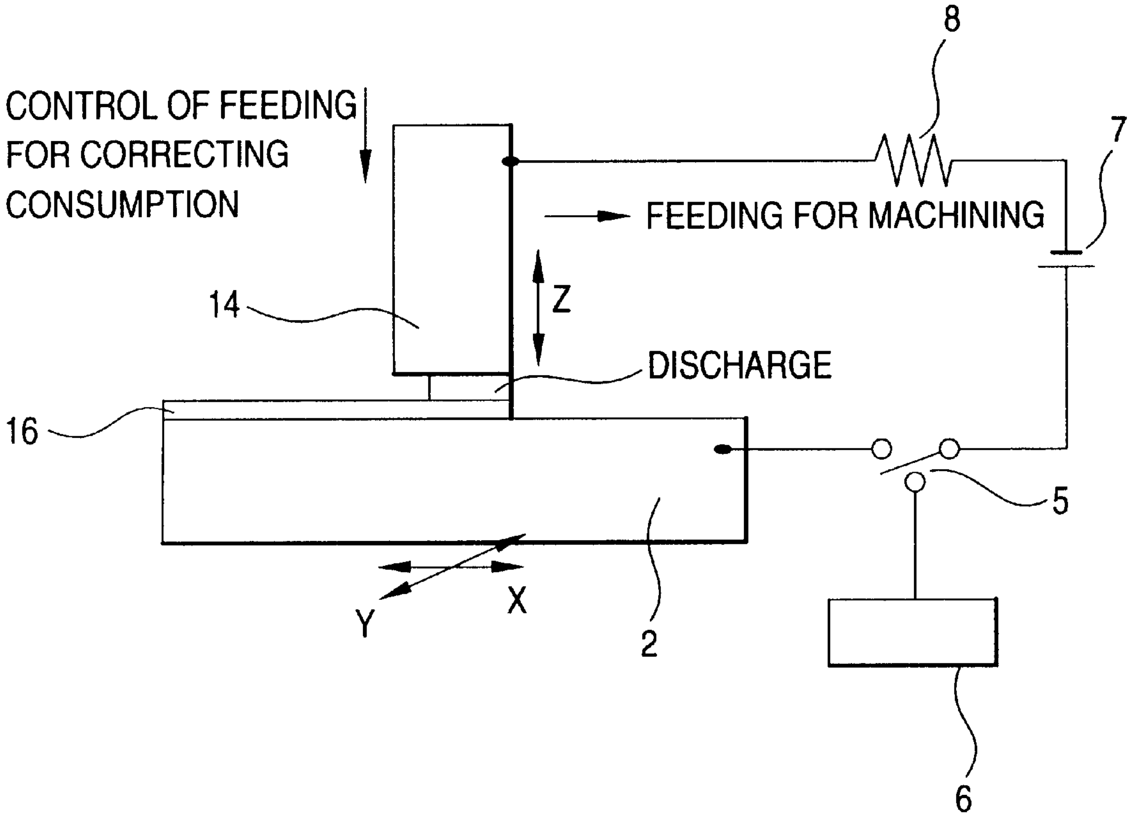
8
7
CONTROL OF FEEDING FOR CORRECTING CONSUMPTION
FEEDING FOR MACHINING
14
Z
DISCHARGE
16
5
Y
X
2
6

FIG. 8

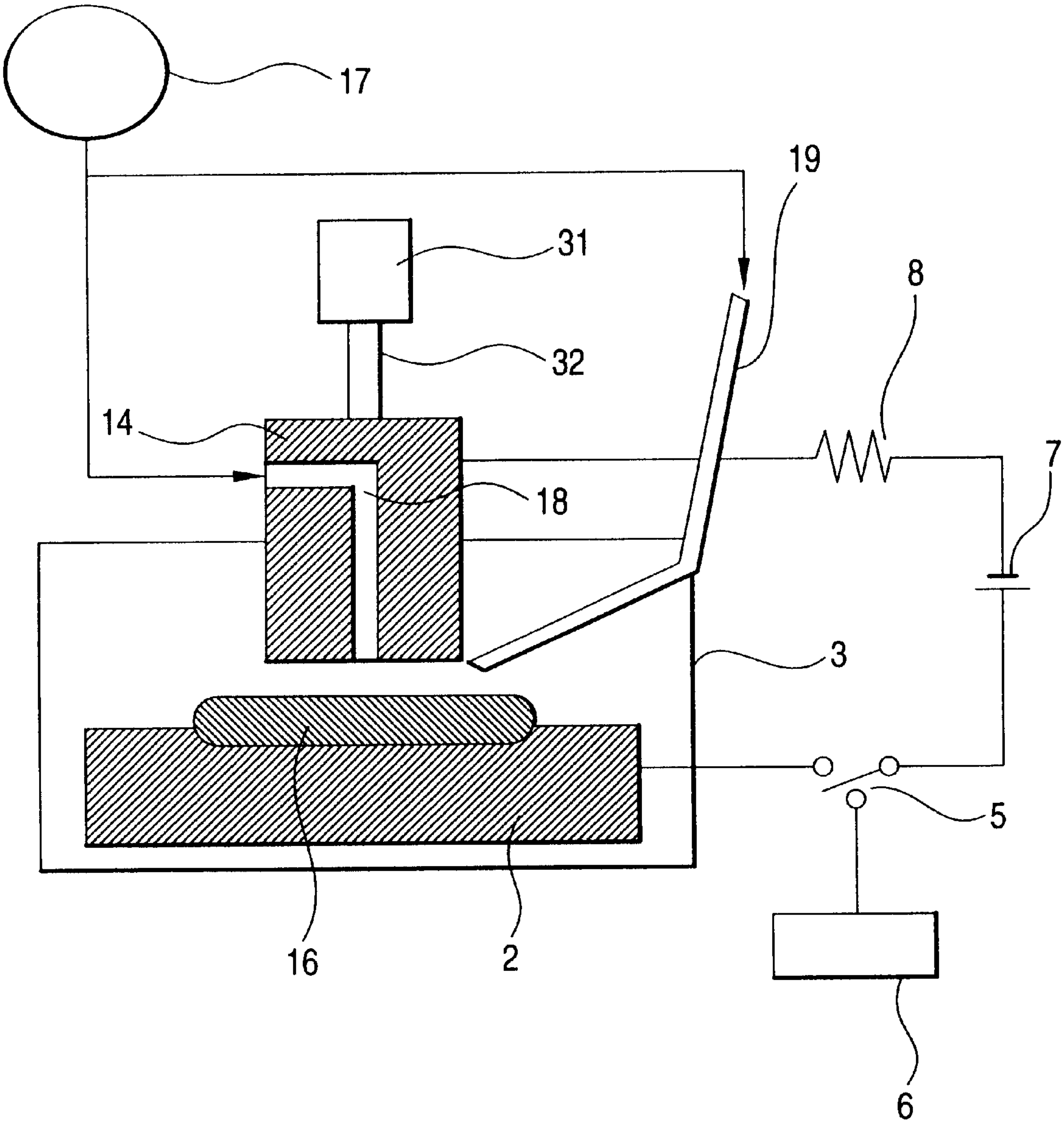

FIG. 9

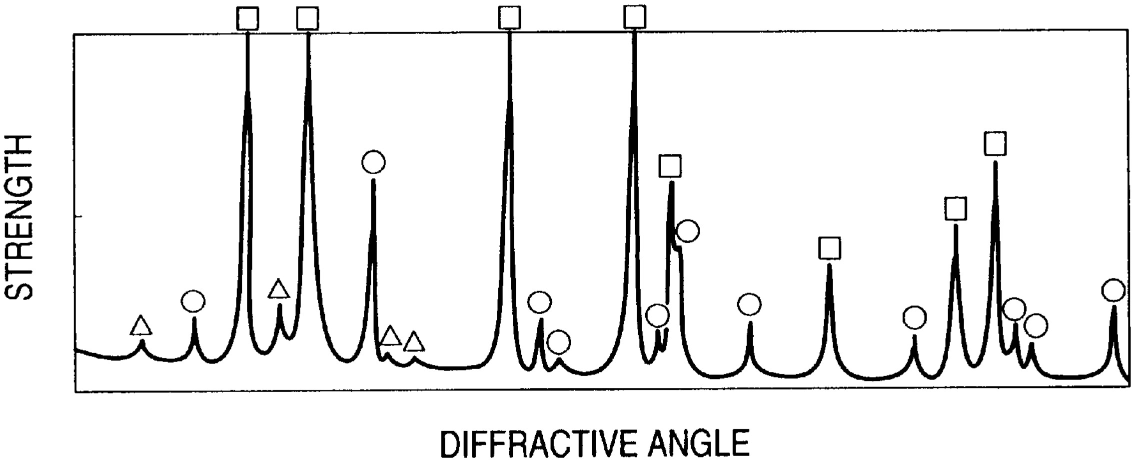

□ : TiC

○ : WC

△ : $Co_3W_9C_4$

FIG. 10

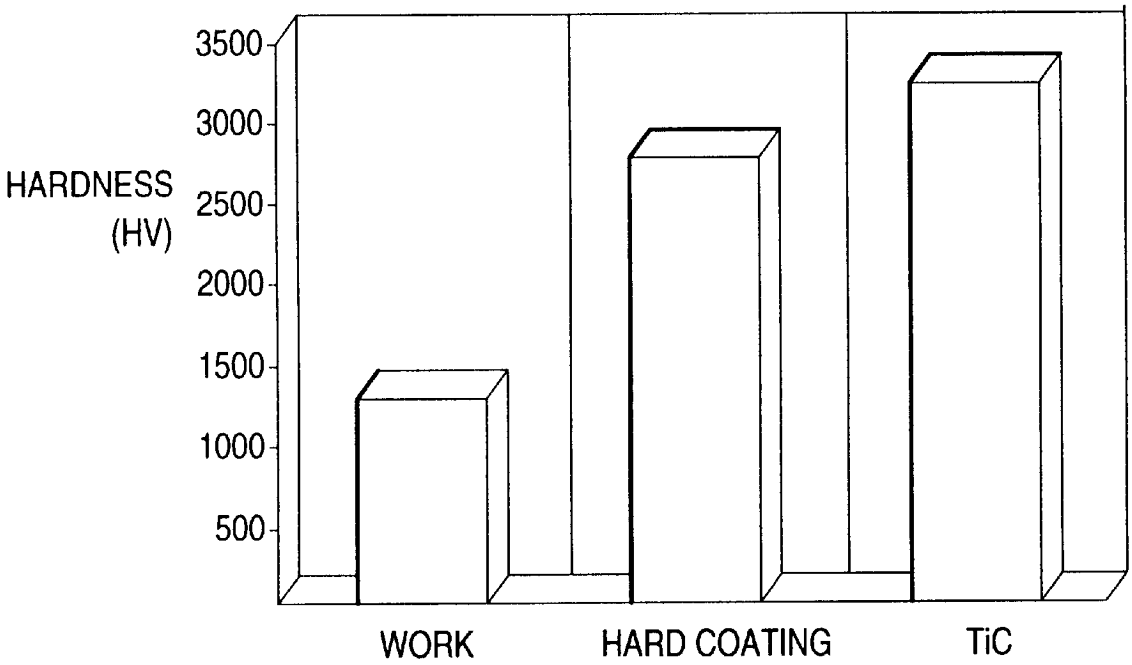
HARDNESS (HV)
3500
3000
2500
2000
1500
1000
500
WORK
HARD COATING
TiC

FIG. 11

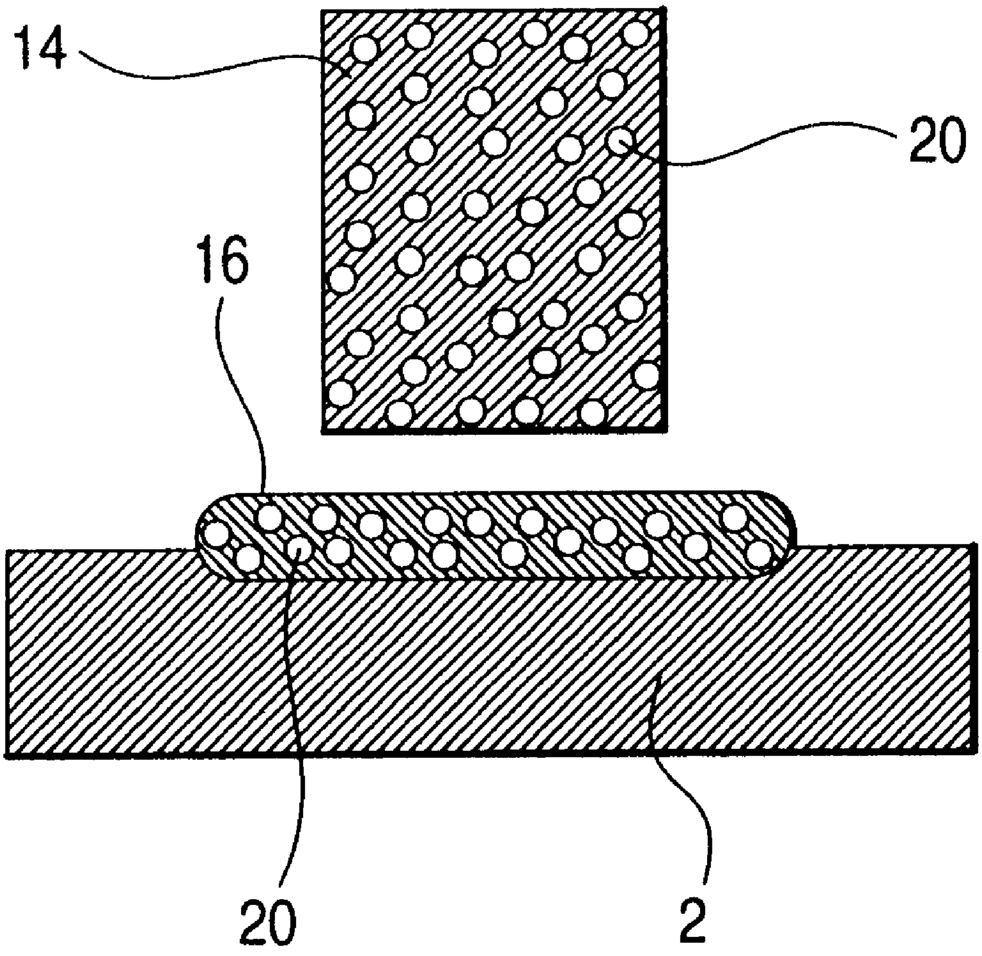

FIG. 12

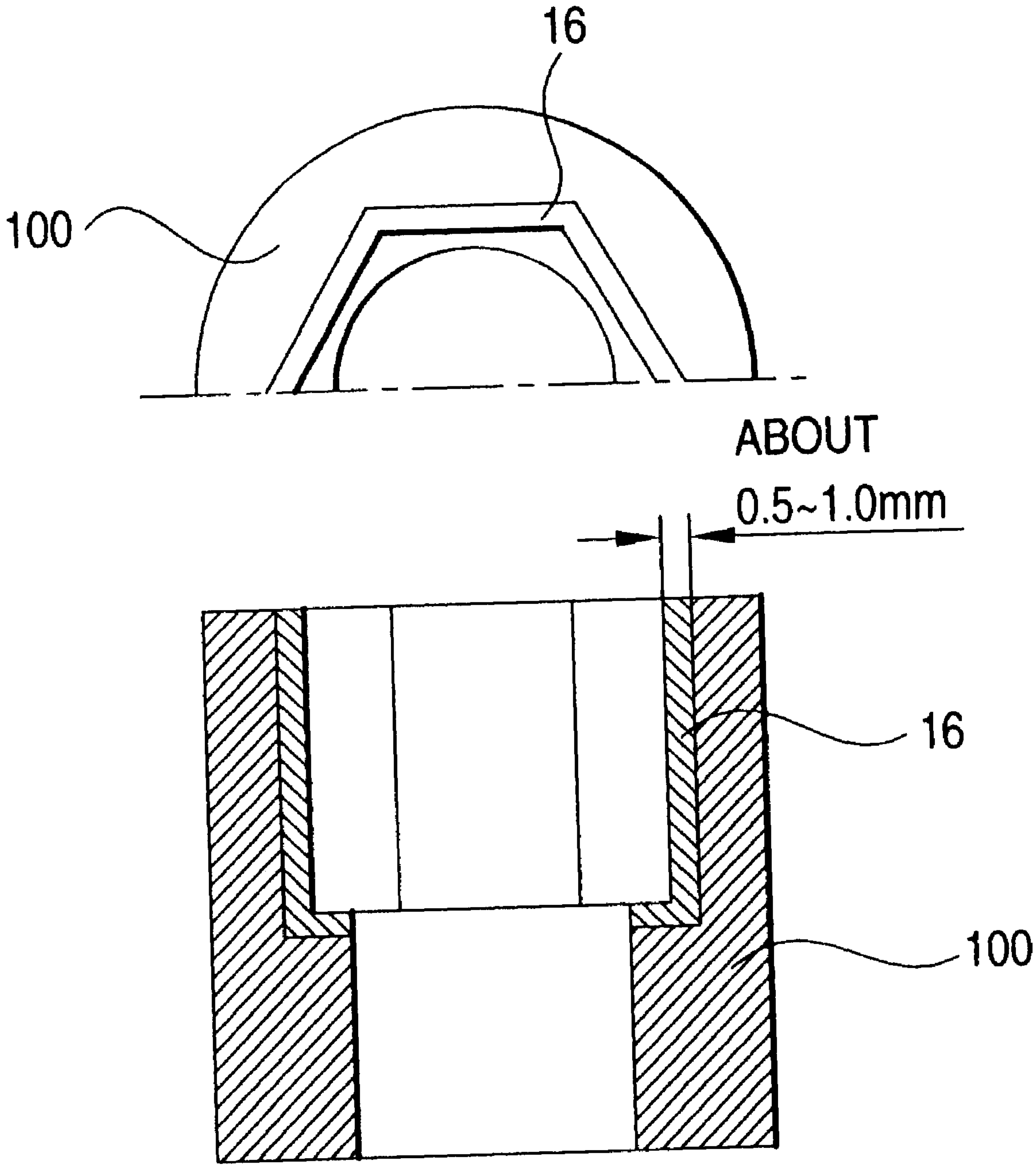

FIG. 13

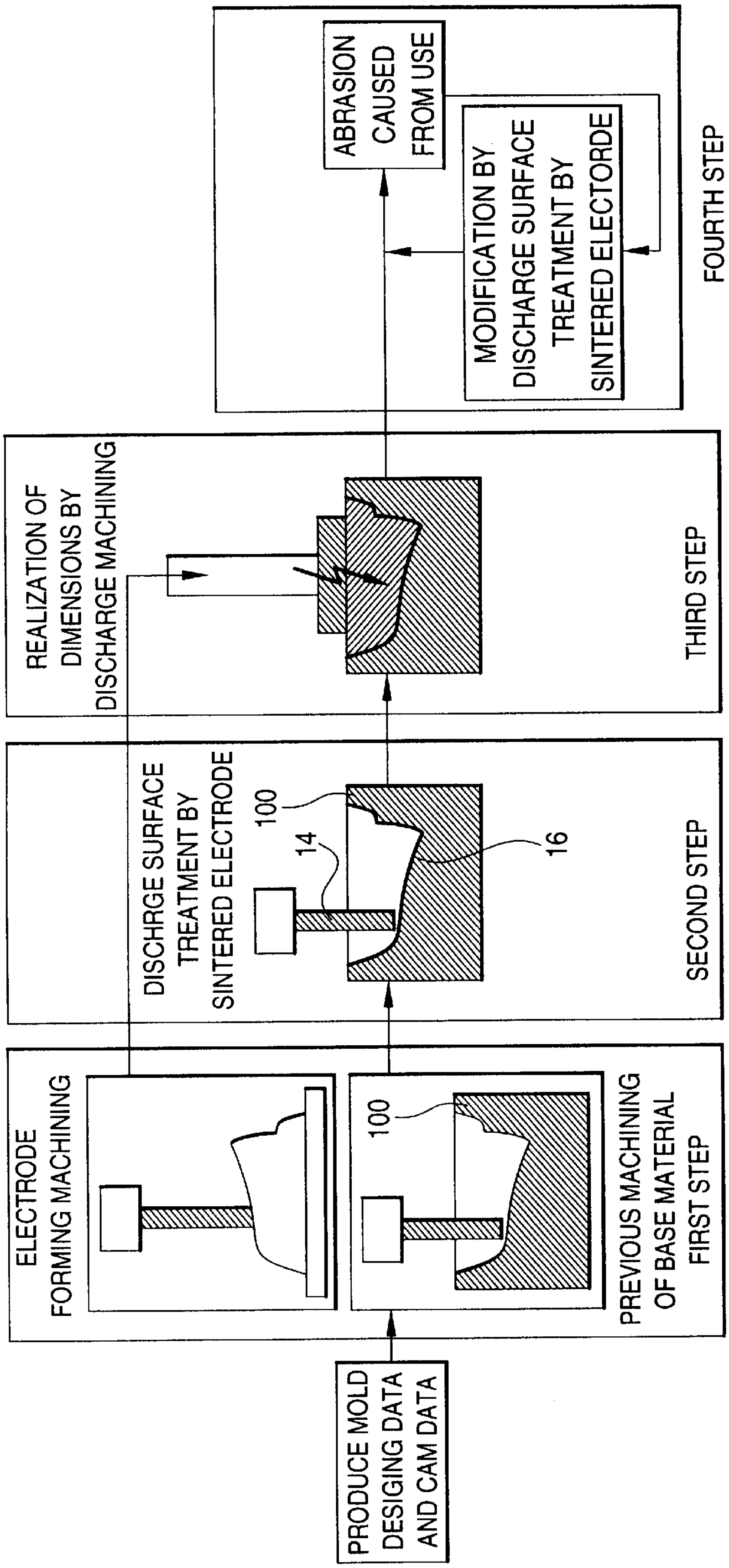
PRODUCE MOLD DESIGING DATA AND CAM DATA
ELECTRODE FORMING MACHINING
100
PREVIOUS MACHINING OF BASE MATERIAL
FIRST STEP
DISCHRGE SURFACE TREATMENT BY SINTERED ELECTRODE
100
14
16
SECOND STEP
REALIZATION OF DIMENSIONS BY DISCHARGE MACHINING
THIRD STEP
ABRASION CAUSED FROM USE
MODIFICATION BY DISCHARGE SURFACE TREATMENT BY SINTERED ELECTORDE
FOURTH STEP

FIG. 14 (a)

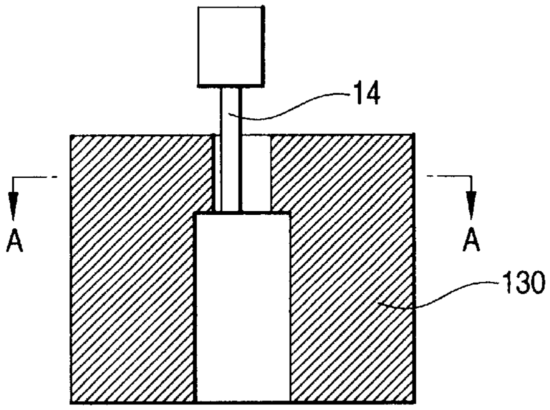

FIG. 14 (b)

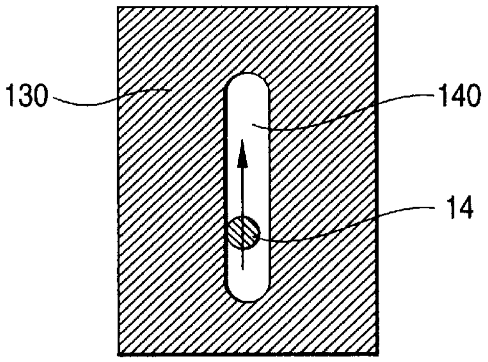

SECTION A-A

FIG. 14 (c)

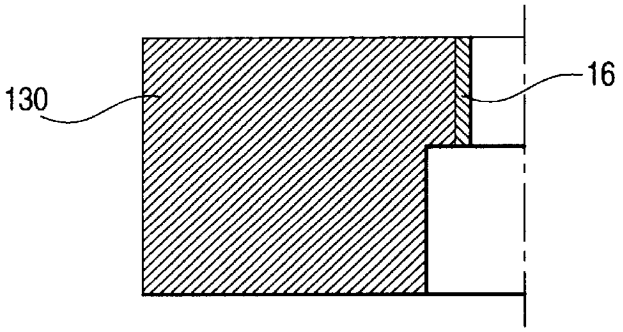

FIG. 14 (d)

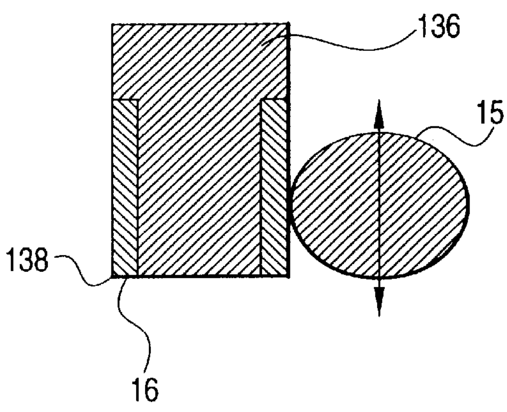

FIG. 14 (e)

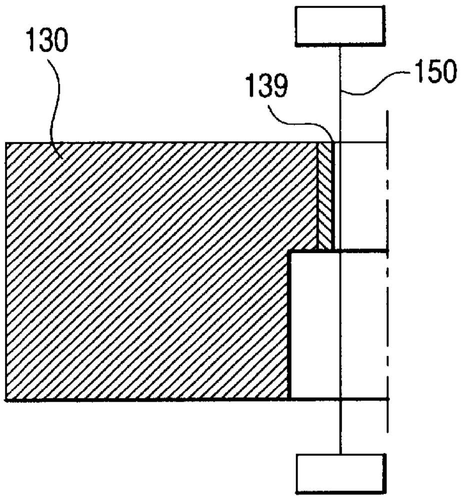

FIG. 15 (a)

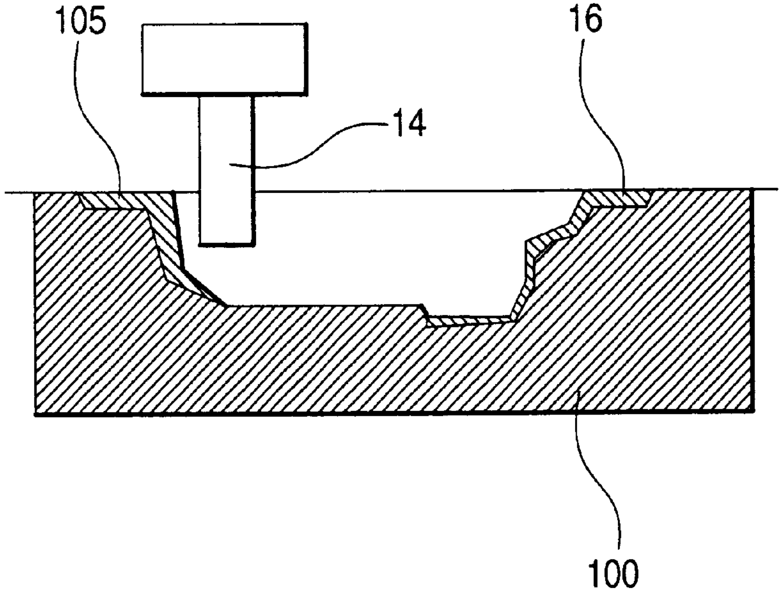

FIG. 15 (b)

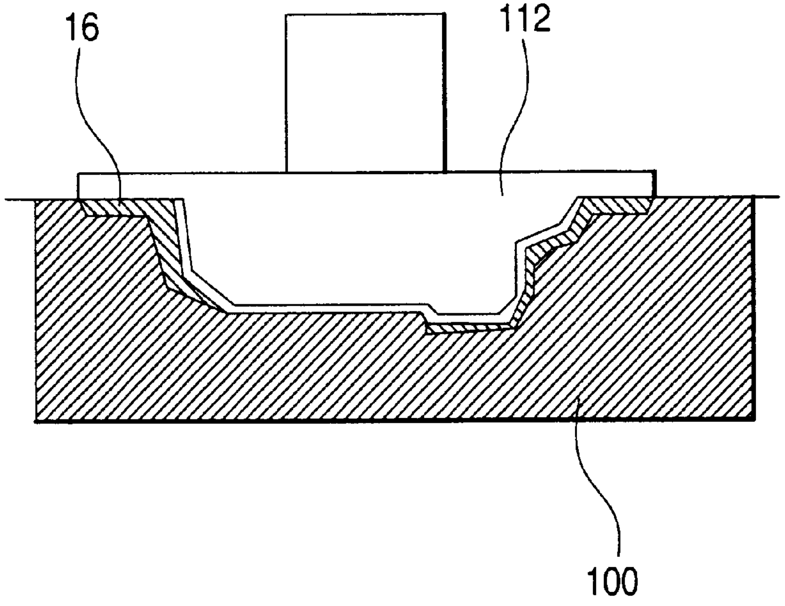

FIG. 16

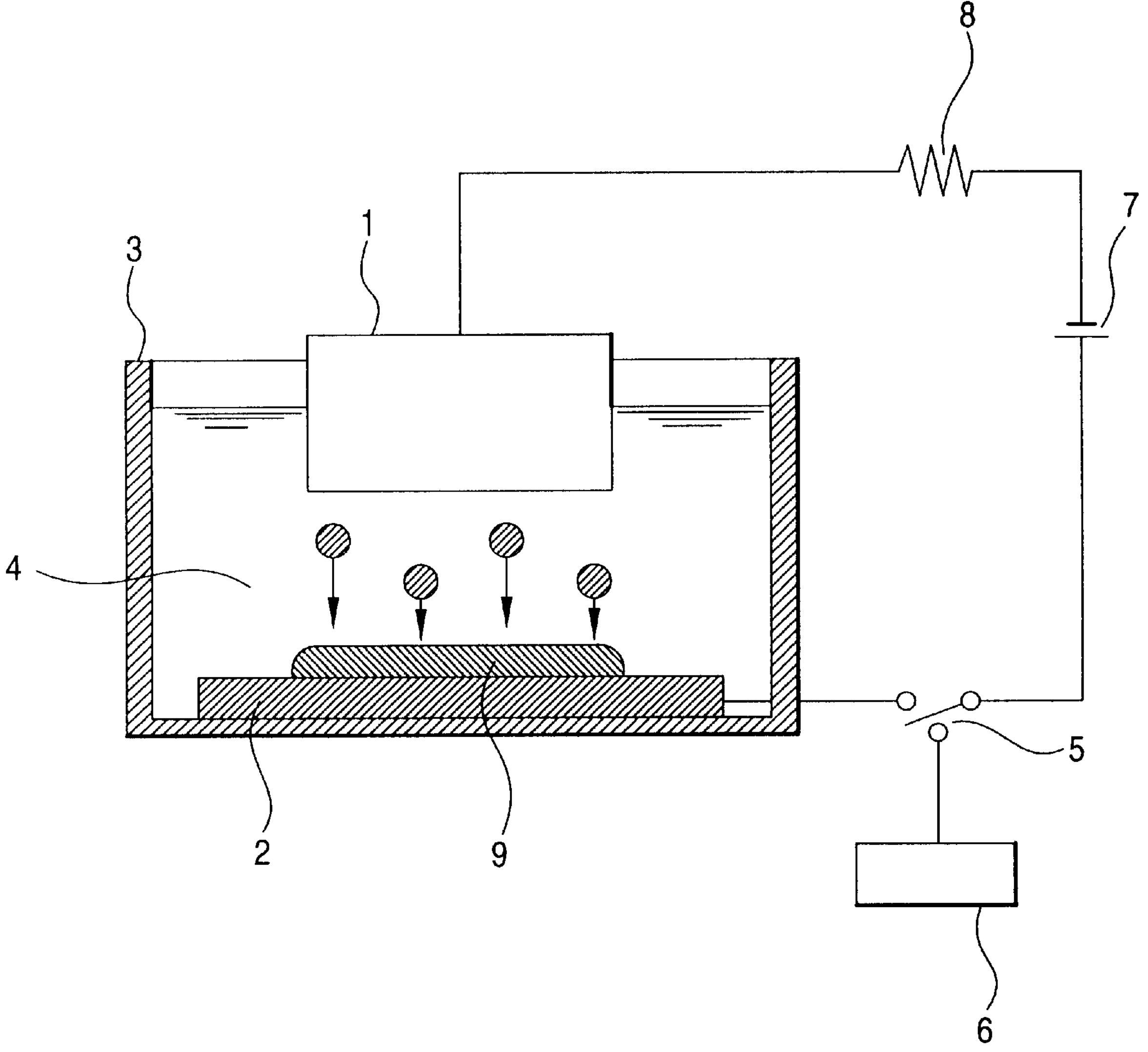

FIG. 17

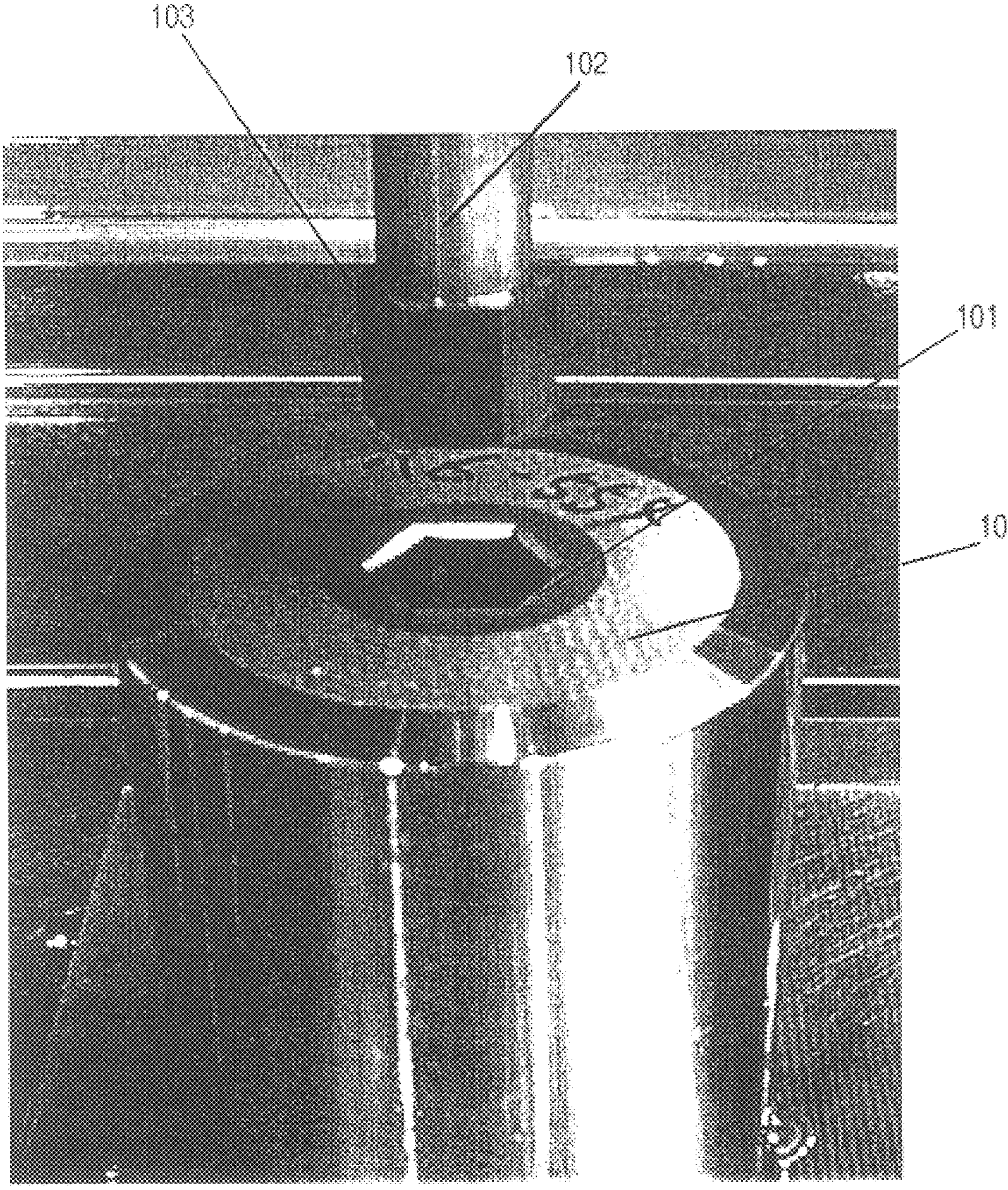

FIG. 18

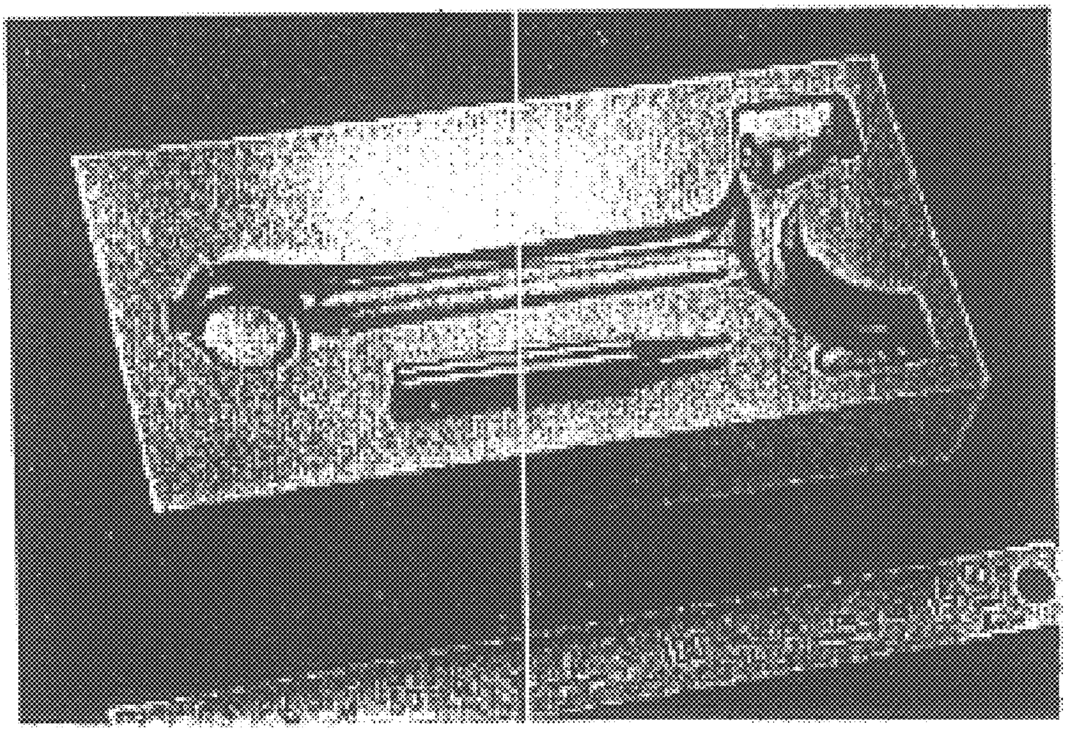

FIG. 19

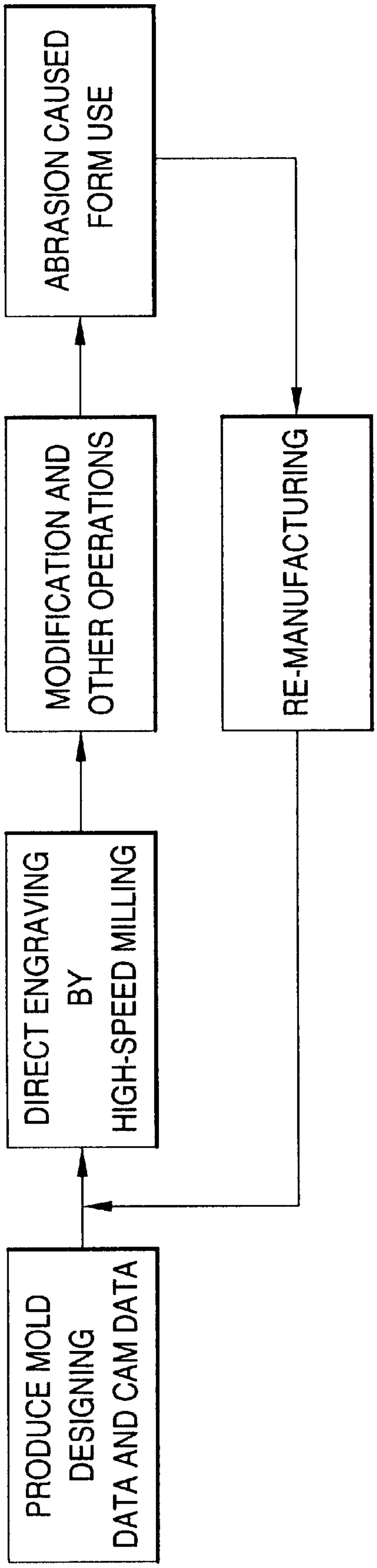
PRODUCE MOLD DESIGNING DATA AND CAM DATA
DIRECT ENGRAVING BY HIGH-SPEED MILLING
MODIFICATION AND OTHER OPERATIONS
ABRASION CAUSED FORM USE
RE-MANUFACTURING

FIG. 20

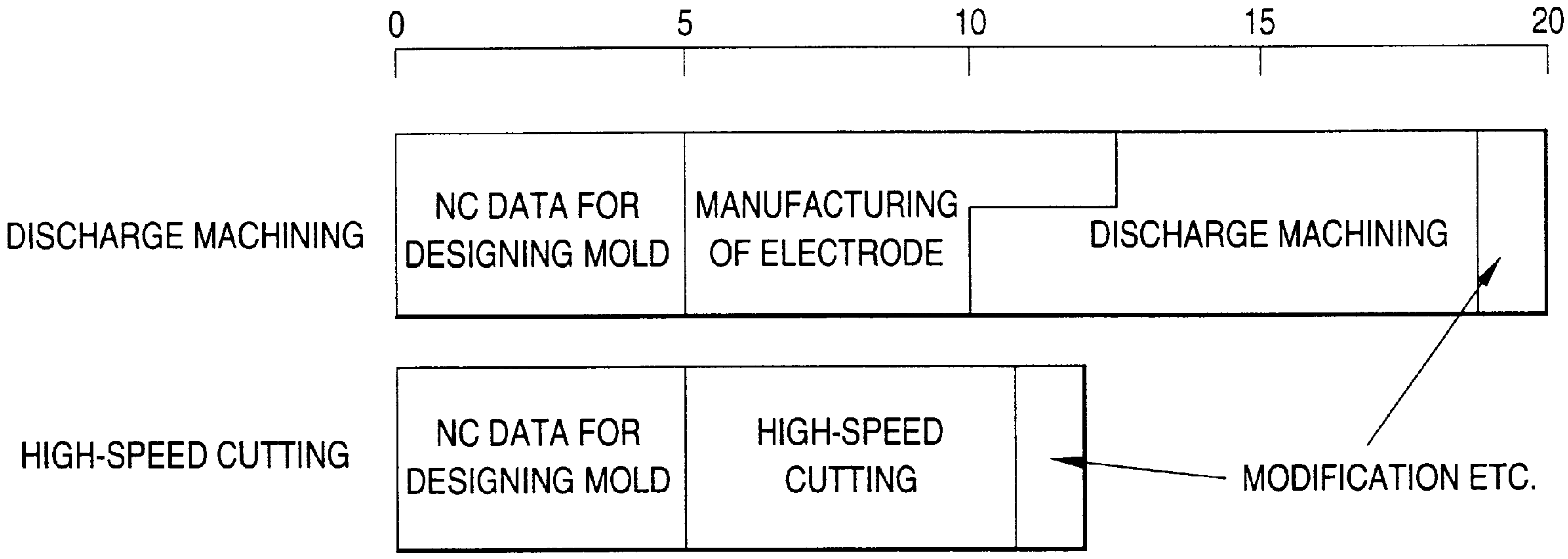

COMPARISON OF TIME REQUIRED TO MANUFACTURE MOLD FOR CONNECTING ROD

FIG. 21

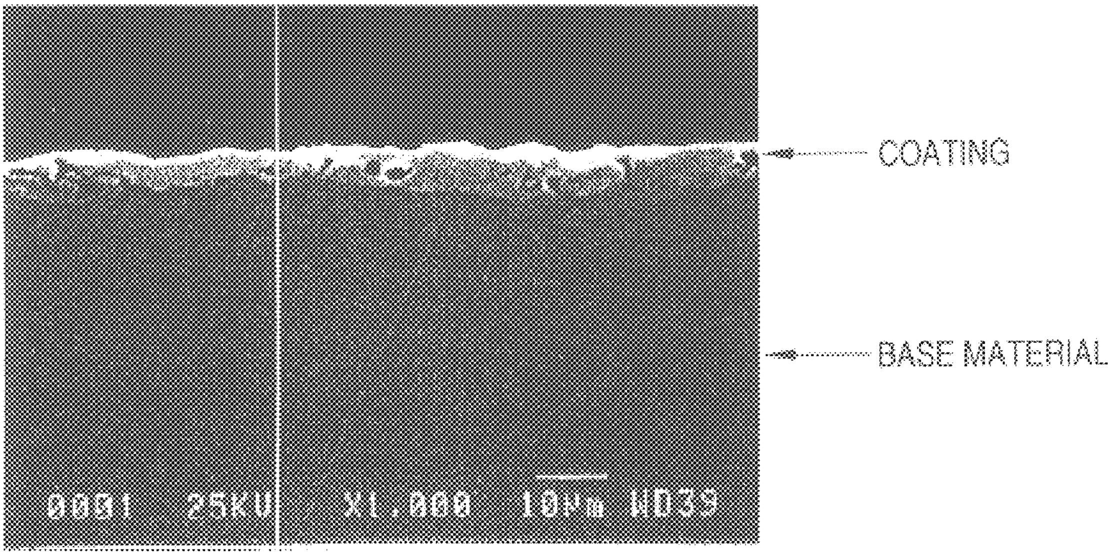

ELECTRODE FOR DISCHARGE SURFACE TREATMENT AND MANUFACTURING METHOD THEREFOR AND DISCHARGE SURFACE TREATMENT METHOD AND DEVICE

TECHNICAL FIELD

The present invention relates to improvements in an electrode for use in electrical discharge surface treatment, arranged to cause discharge to take place between the electrode and a workpiece. The discharge energy is used to form a hard coating on the surface of the workpiece. Also disclosed are a manufacturing method therefor, a discharge surface treatment method and an apparatus therefor.

BACKGROUND ART

Hitherto, as a technique for coating the surface of a work to impart corrosion resistance and wear resistance to the surface, a discharge surface treatment method has been disclosed in, for example, Japanese Patent Unexamined Publication No. Hei. 5-148615. The foregoing technique uses an electrode in the form of a green compact composed of WC powder and Co powder so that a primary step (a depositing step) is performed. Then, a secondary step (a re-melting step) is performed after the electrode has been changed. The second electrode, may be, e.g., a copper electrode whose electrode wear is comparatively small. Thus, the foregoing method requires two steps to complete the treatment of the surface of a metal material. This conventional technique is excellent when it is used to form, on a steel material, a hard coating exhibiting satisfactory hardness and adhesiveness and having a thickness of tens of μm. However, the method encounters difficulty when a hard coating having sufficient adhesiveness is to be formed on a sintered material, such as a hard alloy.

A discharge surface treatment method disclosed in Japanese Patent Unexamined Publication No. Hei. 9-192937, which is capable of forming a hard coating having sufficient adhesiveness on a hard alloy will now be described with reference to FIG. **16**. Referring to FIG. **16**, reference numeral **1** represents an electrode in the form of a green compact manufactured by compressing TiH_2 powder, **2** represents a workpiece, **3** represents a working tank, **4** represents a working fluid and **5** represents a switching element for switching the voltage and current which are applied to the electrode **1** and the workpiece **2**. Reference numeral **6** represents a control circuit for on/off controlling of the switching element **5**. Reference numeral **7** represents a power source, **8** represents a resistor and **9** represents a formed hard coating. The discharge surface treatment performed with the foregoing structure enables a hard coating exhibiting excellent adhesiveness and having a thickness of several μm to tens of μm to be formed on the surface of steel or a hard alloy.

Each of the foregoing conventional techniques are characterized by using an electrode in the form of a green compact, and has an advantage in that components of the electrode can easily be melted due to the discharge energy, permitting a coating to easily be formed on the surface of the workpiece. However, the following three reasons have inhibited practical use of the foregoing method.

A first reason will now be described. The electrode in the form of the green compact is brittle and susceptible to damage. Therefore, machining to adapt the electrode to the shape of the workpiece, or machining to form screw holes for securing the electrode to the apparatus cannot easily be performed. Thus, the preparatory operations for the discharge surface treatment become too complicated, causing a substantial deterioration in the process efficiency. To overcome the above-mentioned problem, it might be feasible to sinter the electrode, in the form of the green compact, into a metal electrode for use. However, there arises a problem in that the processability of the sintered electrode deteriorates and a speed at which the hard coating can be formed is reduced.

A second reason will now be described. An electrode having a size satisfactory from the viewpoint of practical use cannot easily be formed. That is, an electrode arranged to be used in the surface treatment of a mold or the like and having a satisfactorily large size can be formed only when a high performance press is employed. Moreover, the fact that the pressure cannot be uniformly transmitted in the material when the powder material is compressed causes irregularities in the density to occur. Therefore, there arises a problem of, for example, cracks. Hence, it follows that the non-uniform hard coating formed on the workpiece results in a poorer quality product.

A third reason will now be described. A thick film cannot easily be formed. The conventional method cannot form a coating, the thickness of which is larger than several μm to tens of μm. A hard coating having a thickness larger than the above-mentioned value, required by industry, cannot be formed.

An elaboration will be given regarding the third reason above. Thin film formation has industrially been performed by physical evaporation, or chemical evaporation which is a dry process. A thick film cannot be formed by the foregoing method. Therefore, spray coating or the like must be employed at present. Spray coating methods capable of coating a variety of materials on a workpiece suffer from coarse texture of the formed coating. Therefore, spray coating cannot be applied in situations requiring precision and durability, such as forming a coating on a mold. The materials which can be spray coated are also excessively limited.

A conventional technique has been disclosed in Japanese Patent Unexamined Publication No. Hei. 8-300227 which relates to an electrode for discharge surface treatment and a method of surface treatment for a metal material. This method has the steps of using carbide, compressing it into an electrode and performing temporal sintering at a temperature lower than the sintering temperature so that an electrode is formed. The method is arranged to change the machining polarity after the discharge surface treatment has been performed to perform a process for further hardening the hard coating. Therefore, the temporal sintering process must be performed at a comparatively high temperature. This process demands that a temperature of 1100° C. is maintained for 30 minutes. Since dense textures have been formed in the foregoing electrode, and manufactured by the temporal sintering process, secondary machining of the electrode cannot be easily performed. Unfortunately, the hard coating cannot be efficiently deposited on a workpiece, resulting in poor quality of the hard coating. When a dense hard coating is required, the machining operation must be performed for a long time. The foregoing method has another problem in that the depositing process is easily shifted to a profile-discharge process.

A method of manufacturing a mold will now be described as an example of the workpiece. The mold can be manufactured by any one of the following three methods. A first method is arranged such that a mold is subjected to heat treatment to impart required hardness and wear resistance. A second method uses surface modifying techniques to deposit a hard coating on a portion, or the overall surface of the mold, to prolong the mold's lifetime. A third method uses a hard alloy or the like to manufacture the mold to maintain the accuracy of the mold for a long time. The third method is employed to manufacture a mold for automobiles or the like which are mass-produced, or to manufacture precise products.

In the present invention, a discharge surface treatment method is employed when a mold is the workpiece which must be processed according to the third method. According to the present invention, a discharge surface treatment method is provided for a mold which is interchangeable with or substitutable for a mold made of a hard alloy or a mold which partially uses the hard alloy. A conventional technique will now be described.

FIG. **17** shows an example of a mold for a die header which is used as a mold a precise forging process. A hard alloy block **101** is embedded in the central portion of a base metal **100** and machined by a profile discharge machine or a wire discharge machine to provide the actual mold surface. Additionally, a discharge surface treatment is performed to deposit a hard coating on the surface of the mold to increase the hardness of the surface which improves the durability of the mold. FIG. **17** shows the structure which is used when the discharge surface treatment is performed. A discharge surface treatment uses an electrode **103** in the form of a green compact to produce a hard coating on the surface of the mold having a thickness of about several μm. Reference numeral **102** represents a shank for securing the electrode **103**. As described above, the mold is manufactured by a plurality of steps including machining the base metal for the mold, embedding the hard alloy block, precise machining of the shape of the mold and discharge surface treatment for improving the surface of the mold.

The foregoing process for manufacturing the mold has two critical problems. A first problem arises due to the hard alloy block being force-fitted into the base material of the mold. Therefore, both of the base material of the mold and the hard alloy block must be machined with considerably excellent accuracy. Therefore, a long time and a great cost are required to manufacture the mold. A second problem is caused from a fact that the hard alloy block is made of a different material than the base material of the mold. As a result, the difference in the coefficient of thermal expansion causes cracks and breakage to easily occur. If the hard alloy block cannot be used due to breakage or cracks, the mold must be discarded or re-manufactured. Also, a long time and a great cost are required to manufacture the mold.

Therefore, a need for improvement is called for by a department which manufactures the molds and/or a department which uses the molds. However, an effective solution has not been provided.

Another case will now be described. In the automobile parts manufacturing industry, a mold for forging a connecting rod structured, for example, as shown in FIG. **18**, is widely used. FIG. **19** shows a representative manufacturing process in the foregoing case. Recently, a high speed cutting technique has rapidly been improved. Therefore, a hard workpiece obtained by heat treatment can be subjected to a cutting operation. FIG. **20** shows results of a comparison of the time required to manufacture connecting rod molds between the high-speed cutting operation and the conventional discharge machining operation. As can be understood from FIG. **20**, the high-speed cutting operation is more efficient than the conventional discharge machining operation.

Since the mold wears after it has been used as shown in **5** of FIG. **19**, changing to a new mold or improving the accuracy of the worn mold is required. In a case of a large mold, as shown in FIG. **18**, the hard alloy block cannot easily be embedded. A major portion of large molds of the foregoing type is usually made of die steel. Therefore, if the die-steel mold has been worn, heat treatment and surface improvement can only be partially performed to improve the durability. Therefore, the frequency of re-manufacturing the molds is raised excessively, causing the cost of manufacturing the mold to be dramatically increased.

The conventional method of forming a hard coating to a workpiece, such as a mold, by performing discharge surface treatment has been structured as described in Japanese Patent Unexamined Publication No. Hei. 5-148615.

The conventional method, however, suffers from thin thickness of the hard coating as shown in FIG. **21**, deterioration in the characteristics of the material at high temperatures due to plastic deformation and insufficient tenacity. Therefore, it is difficult to use the mold having the hard coating formed thereon as a substitute for the hard alloy block. Therefore, the foregoing hard coating has been limitedly used to improve the surface of a hard alloy.

As described above, there arises a problem of increased time and manufacturing costs needed to manufacture the mold made of the hard alloy. In a case of a large mold into which the hard alloy block cannot be embedded, there arises a problem of increased frequency of re-manufacturing the molds and, therefore, the cost for manufacturing the mold cannot be reduced. The conventional method of forming the hard coating by the discharge surface treatment suffers from an unsatisfactorily small thickness. Therefore, the problems could not be previously overcome.

DISCLOSURE OF THE INVENTION

The present invention solves the above-mentioned problems experienced with the conventional techniques, and an object of the present invention is to obtain an electrode for discharge surface treatment which can easily be secondary-machined and which is free from reduction in a forming rate of a hard coating.

Another object of the present invention is to obtain an electrode for discharge surface treatment which is capable of forming, on a workpiece, a hard coating, which is capable of imparting special functions including lubricity, strength against high temperatures and wear resistance.

Another object of the present invention is to obtain an electrode for discharge surface treatment which is capable of forming a high-quality hard coating on a workpiece.

Another object of the present invention is to obtain a discharge surface treatment method which is capable of efficiently forming a hard coating on a workpiece, easily forming an electrode, forming a thick film of a hard coating in an arbitrary range of an area which is applicable to a variety of mechanical elements including molds, tools and mechanical parts.

Another object of the present invention is to obtain a discharge surface treatment method which is applied to a mold as a substitute for a mold made of a hard alloy, which exhibits a low cost, high accuracy and excellent durability, which can be quickly manufactured and which can be used repeatedly using only a simple repairing operation.

Since the present invention is structured as described above, the following effects can be obtained.

The electrode for discharge surface treatment according to the first invention attains an effect that it can easily be formed by a mechanical removing process, such as a turning operation, a grinding operation or a polishing operation or a discharging process. Moreover, a discharge surface treatment using the electrode can be performed such that a rate at which the hard coating which is formed on the work is formed is not reduced.

The electrode for discharge surface treatment according to the second invention attains an effect similar to that obtainable from the first invention and another effect that formability in the compression forming can significantly be improved.

The electrode for discharge surface treatment according to the third invention attain an effect similar to that obtainable from the first invention or the second invention.

The electrode for discharge surface treatment according to the fourth invention attains an effect similar to that obtainable from the first invention or the second invention and another effect that a hard coating capable of imparting special functions including lubricity, strength against high temperatures and wear resistance can be formed on a work by the discharge surface treatment using the electrode.

The electrode for discharge surface treatment according to the fifth invention attains an effect similar to that obtainable from the first invention or the second invention and another effect that a denser and high-quality hard coating free from irregularity of the hardness can be formed on a work by the discharge surface treatment using the electrode.

The method of manufacturing the electrode for discharge surface treatment according to the sixth invention attains an effect that an electrode for discharge surface treatment can be obtained which can easily be formed by a mechanical removing process, such as a turning operation, a grinding operation or a polishing operation or a discharging process and another effect that the discharge surface treatment using the electrode can be performed such that a rate at which the hard coating which is formed on the work is formed is not reduced.

The method of manufacturing the electrode for discharge surface treatment according to the seventh invention attains an effect similar to that obtainable from the sixth invention and another effect that the formability in the compression forming can significantly be improved.

The method of manufacturing the electrode for discharge surface treatment according to the eighth invention attains an effect similar to that obtainable from the sixth invention or the seventh invention.

The method of manufacturing the electrode for discharge surface treatment according to the ninth invention attains an effect similar to that obtainable from the sixth invention or the seventh invention. Moreover, another effect can be obtained in that a hard coating capable of imparting special functions including lubricity, strength against high temperatures and wear resistance can be formed on a work by the discharge surface treatment using the electrode.

The method of manufacturing the electrode for discharge surface treatment according to the tenth invention attains an effect similar to that obtainable from the sixth invention or the seventh invention. Moreover, another effect can be obtained in that a denser and high-quality hard coating free from irregularity of the hardness can be formed on a work by the discharge surface treatment using the electrode.

The discharge surface treatment method according to the eleventh and twelfth inventions attains an effect that the electrode for discharge surface treatment can easily be formed, a hard coating can efficiently be formed on a work and a discharge surface treatment method can be obtained which can be applied to a variety of mechanical parts including a mold, a tool and a mechanical element. Another effect can be obtained in that the masking process is not required because the hard coating can be formed in an area of the work which is substantially the same as the area of the electrode.

The discharge surface treatment method according to the thirteenth invention attains an effect similar to that obtainable from the eleventh invention and another effect that the structure can be simplified.

The discharge surface treatment method according to the fourteenth invention attains an effect similar to that obtainable from the eleventh invention. Another effect can be obtained in that machining can be performed while a small-size electrode is being scanned, a necessity for using a large-size and special-shape sintered electrode can be eliminated, the small-size electrode can be scanned on the overall curved surface of a work, such as a mold, having a three-dimensional free curved surface and a hard coating can be formed having the same thickness over the area of the work or such that the thickness is changed if necessary.

The discharge surface treatment method according to the fifteenth invention attains an effect similar to that obtainable from the eleventh invention. Another effect can be obtained in that a hard coating capable of imparting special functions including lubricity, strength against high temperatures and wear resistance can be formed on a work by the discharge surface treatment using the electrode.

The discharge surface treatment method according to the sixteenth invention attains an effect similar to that obtainable from the eleventh invention and another effect that a denser and high-quality hard coating free from irregularity of the hardness can be formed on a work by the discharge surface treatment using the electrode.

The discharge surface treatment method according to the seventeenth invention attains an effect similar to that obtainable from the eleventh invention and another effect that a mold coated with a hard coating which can be manufactured in a short time, the cost of which can be reduced and which exhibits satisfactory accuracy can be obtained. Another effect can be obtained in that a mold coated with a hard coating exhibiting excellent durability and repeated use of which is permitted with a simple modifying operation if the mold is worn.

The discharge surface treatment method according to the eighteenth invention attains an effect similar to that obtainable from the seventeenth invention. Another aspect can be obtained in that a mold coated with a hard coating exhibiting furthermore satisfactory durability can be obtained because a hard coating thicker than a hard coating formed in a portion of the mold in which the degree of wear is low is formed in a portion of the same in which the degree of wear is high.

The discharge surface treatment method according to the nineteenth invention attains an effect similar to that obtainable from the seventeenth invention. Another effect can be obtained in that a mold coated with a hard coating can be obtained with which re-manufacturing of the mold is not required, semipermanent use of the mold is permitted, costs required to manufacture the mold and maintain the same can considerably be saved and saving of energy and environmental friendliness are permitted because the amount of the material for manufacturing the mold can considerably be reduced.

The discharge surface treatment method according to the twentieth invention attains an effect similar to that obtainable from the nineteenth invention and another effect that modification of the mold can be completed in a considerably short time.

The discharge surface treatment apparatus according to the twenty-first and twenty-second inventions attains an effect that a discharge surface treatment apparatus can be obtained with which the electrode for discharge surface treatment can easily be formed, a hard coating can efficiently be formed on a work and adaptation to a variety of mechanical parts including a mold, a tool and a mechanical element is permitted. Another effect can be obtained in that the masking process is not required because the hard coating can be formed in an area of the work which is substantially the same as the area of the electrode.

The discharge surface treatment apparatus according to the twenty-third invention attains an effect similar to that obtainable from the twenty-first invention and another effect that the apparatus can be simplified.

The discharge surface treatment apparatus according to the twenty-fourth invention attains an effect similar to that obtainable from the twenty-first invention. Another effect can be obtained in that machining can be performed while a small-size electrode is being scanned, a necessity for using a large-size and special-shape sintered electrode can be eliminated, the small-size electrode can be scanned on the overall curved surface of a work, such as a mold, having a three-dimensional free curved surface and a hard coating can be formed having the same thickness over the area of the work or such that the thickness is changed if necessary.

BRIEF DESCRIPTION OF THE DRAWINGS

FIG. **1** is a diagram showing a method of manufacturing an electrode for discharge surface treatment according to a first embodiment of the present invention;

FIG. **2** is a diagram showing a method of forming the electrode for discharge surface treatment according to the first embodiment of the present invention by mixing wax in the material of the electrode;

FIG. **3** is a graph showing an example of a steam pressure curve of the wax;

FIG. **4** is a diagram showing the schematic structure of a discharge surface treatment method and an apparatus therefor according to a second embodiment of the present invention;

FIG. **5** is an enlarged photograph showing a hard coating formed by single discharge using TiC as the main component of the electrode according to the second embodiment of the present invention;

FIG. **6** is a photograph showing a state of deposition of a hard coating formed by continuous discharge according to the second embodiment of the present invention;

FIG. **7** is a schematic diagram showing a machining method employing an electrode scanning method according to the second embodiment of the present invention;

FIG. **8** is a diagram showing a discharge surface treatment method according to the second embodiment of the present invention with which aerial discharge is performed;

FIG. **9** shows results of X-ray diffraction of the hard coating formed on a work by using an electrode according to the second embodiment of the present invention and baked such that an incomplete-sintering state mainly composed of TiC is realized;

FIG. **10** is a graph showing results of Vickers hardness measurements of the formed hard coating according to the second embodiment of the present invention;

FIG. **11** is a diagram showing a method of forming a hard coating according to a third embodiment of the present invention and capable of providing special functions;

FIG. **12** is a diagram showing a state in which a discharge surface treatment method according to a fifth embodiment of the present invention is applied to a precisely-forged mold;

FIG. **13** is a diagram showing a process for manufacturing and using the mold according to the fifth embodiment of the present invention;

FIG. **14** is a diagram showing application of a sixth embodiment of the present invention to a pressing mold;

FIG. **15** is a diagram showing a method of changing the thickness of the hard coating in accordance with a degree of wear in order to elongate the lifetime of the mold according to a seventh embodiment of the present invention;

FIG. **16** is a diagram showing the structure of a conventional discharge surface treatment method;

FIG. **17** is a photograph showing a mold for a die header which is used as a conventional mold manufactured by precise forging;

FIG. **18** is a photograph showing a conventional forged mold for a connecting rod;

FIG. **19** is a diagram showing an example of a conventional process for manufacturing a mold;

FIG. **20** is a graph showing results of a comparison of time required to manufacture a mold for a connecting rod between a conventional discharge machining and a method of using high-speed cutting; and

FIG. **21** is a photograph showing a coating formed by a conventional discharge surface treatment.

DETAILED DESCRIPTION OF THE PREFERRED EMBODIMENT

First Embodiment

FIG. **1** is a diagram showing a method of manufacturing an electrode for discharge surface treatment according to a first embodiment of the present invention. In this embodiment, a process for manufacturing an electrode for discharge surface treatment made from powder obtained by mixing WC powder and Co powder as an example will be described. Referring to FIG. **1**, reference numeral **11** represents a green compact, **12** represents WC powder, **13** represents Co powder, **13***a* represents Co powder, a portion of which has been melted, **14** represents an electrode for discharge surface treatment, **21** represents a vacuum furnace, **22** represents a high-frequency coil and **23** represents a vacuum atmosphere.

The green compact **11** obtained by mixing and compression-forming the WC powder and the Co powder may be obtained by simply mixing and compression-forming the WC powder **12** and the Co powder **13**. It is preferable that a wax is mixed with the powders and then compression-forming is performed because the formability of the green compact **11** can be improved. This forming method will now be described with reference to FIG. **2**. Reference numeral **15** represents a wax, such as paraffin, in the green compact **11** placed in the vacuum furnace **21** shown in FIG. **2**(*a*). When the wax **15** is mixed with the powder obtained by mixing the WC powder **12** and the Co powder **13** before compression forming is performed, the formability of the green compact **11** can substantially be improved. Since the wax **15** is, however, an insulating substance, leaving the same in the electrode in a large quantity raises the electrical resistance of the electrode. Thus, the discharging characteristic deteriorates. Therefore, the wax **15** must be removed. FIG. **2**(*a*) shows a state in which the electrode in the form of the green compact with wax mixed in is introduced into the vacuum furnace **21** so as to be heated. The heating operation is performed in the vacuum atmosphere **23**. As an alternative to this, the atmosphere may be a gas, such as a hydrogen gas or an argon gas. The green compact **11** placed in the vacuum furnace **21** is heated by the high-frequency coil **22** disposed around the vacuum furnace **21**. If the heating temperature is too low, the wax **15** cannot be removed. If the heating temperature is too high, the wax **15** is undesirably formed into soot. As a result, the purity of the electrode deteriorates. Therefore, the temperature must be not lower than the temperature at which the wax **15** is melted and not higher than the temperature at which the wax **15** is decomposed and soot is formed. A steam pressure curve of wax having a boiling point of 250° C. is shown in FIG. **3** as an example. When the atmospheric pressure in the vacuum furnace **21** is made to be not higher than the steam pressure of the wax **15**, the wax **15** is evaporated and removed as shown in FIG. **2**(*b*). As a result, the green compact **11** made of WC and Co can be obtained.

Then, the green compact **11** in the vacuum furnace **21** is heated by the high-frequency coil **22**, as shown in FIG. **1**(*a*) to impart strength with which durability against machining can be obtained to the green compact **11**. To prevent an excessive degree of hardening, baking is performed to a hardness of, for example, a chalk (hereinafter referred to as "incomplete-sintering"). In the foregoing state, melting of metal, such as Co, starts to fill the gaps between the carbide particles. Thus, a state of solid solution of the carbide is formed. On the other hand, in the portions in which carbide comes into contact with other carbide, bonding proceeds. However, compared with the complete-sintering temperature (selected for the baking operation by the high frequency coil **22** mentioned above), the incomplete sintering temperature is comparatively low, and since at this temperature the green compact cannot result in complete-sintering, incomplete-sintering causes weak bonds to be formed.

The baking operation for realizing the incomplete-sintering is performed under temperature conditions which are varied depending on the material of the electrode. The conditions can be determined in advance in accordance with the results of experiments. In an example case where WC powder and Co powder are mixed (weight ratio=8:2) with each other so as to be compression-formed, the incomplete-sintering can be realized by baking the mixture at 600° C. for one hour. When TiC powder and TiH_2 powder are mixed (weight ratio=9:1) with each other and compression-formed, the incomplete-sintering can be realized by performing baking the mixture at 900° C. for one hour.

As described above, the temperature at which baking is performed to realize the incomplete-sintering must be set at which a portion of a soft material (for example, Co powder), which is employed as a binder with respect to a hard material (for example, WC powder), is melted. The foregoing temperature is considerably lower than the melting point of the hard material. The temperature varies in accordance with the mixture ratio of the hard material and the soft material. That is, if the ratio of the soft material employed to serve as the binder with respect to the hard material is raised, the baking temperature for realizing the incomplete-sintering must be lowered. If the ratio of the soft material serving as the binder is raised and, thus, the ratio of the hard material is lowered, the efficiency of forming the hard coating on the workpiece deteriorates. Therefore, the ratio of the soft material serving as the binder has a limit from a viewpoint of practical use. Therefore, the baking temperature for realizing the incomplete-sintering has a lower limit. That is, it is preferable that the baking temperature for realizing the incomplete-sintering is 400° C. or higher.

It is a furthermore important fact that the baking temperature for realizing the incomplete-sintering must be lower than 1100° C. If the temperature is higher than the above-mentioned level, the electrode is hardened excessively. In this case, during the discharge process a problem is caused in that the material of the electrode is non-uniformly separated due to a heat shock caused by the arc discharge and, therefore, the material of the electrode is not supplied normally to the space between the poles. As a result, the quality of the coating formed on the work excessively deteriorates.

The electrode for discharge surface treatment which has been compression-formed and then baked so as to be brought to the incomplete-sintering can easily be machined by a mechanical removing process, such as a turning operation, a grinding operation or a polishing operation or a discharging process. Moreover, the rate at which the hard coating is formed on a workpiece by the discharge surface treatment using the foregoing electrode is not lowered.

Second Embodiment

FIG. **4** is a schematic diagram showing the structure of a discharge surface treatment method and an apparatus therefor according to a second embodiment of the present invention. Referring to FIG. **4**, reference numeral **14** represents an electrode for discharge surface treatment and **16** represents a hard coating formed on a workpiece **2**. Reference numeral **31** represents a feeding motor and **32** represents a feeding screw. Reference numeral **3** represents a working tank, **4** represents a working fluid composed mainly of oil having an insulation characteristic or water and **5** represents a switching element for switching voltage and current applied to the electrode **14** for discharge surface treatment of the workpiece **2**. Reference numeral **6** represents a control circuit for controlling the switching element **5**. Reference numeral **7** represents a power source and **8** represents a resistor. The electrode **14** for discharge surface treatment is an electrode compression-formed and baked to a incomplete-sintering similar to that described according to the first embodiment. A control unit (not shown) permits the feeding motor **31** to feed the electrode **14** for discharge surface treatment to the workpiece **2** in a required control mode including servo feeding and constant-speed feeding.

The working fluid **4** is composed mainly of oil having the insulating characteristic or water. When insulating oil is used as the working fluid **4**, advantages can be realized in that widely used techniques about the discharge machine can be directly applied and the mechanical structure can be comparatively simplified. When water is employed as the working fluid, hydroxide is sometimes simultaneously produced with the reaction. Therefore, there sometimes arises a problem when a high-quality film is required. When a widely used electroless power source for a wire discharging machine is used, the foregoing problems can be overcome. Even in a case where water is employed as the working fluid, a hard coating having characteristics which are, from a viewpoint of practical use, the same as those obtained where insulating oil is used as the working fluid.

A method of forming the hard coating **16** will now be described. When intermittent or continuous arc discharge is generated by the power source **7** between the electrode **14** and the workpiece **2**, the space between the poles are locally heated due to heat that is generated. In order to simplify the description, a process using a pulse-shape, intermittent arc discharge will now be described. When a typical power source is used as a means for generating the intermittent arc discharge, the structure can be easily understood. Note that the waveform, the value of the current and the other conditions must be optimized, if necessary. When a single arc discharge is generated, the heat shock energy causes a portion of the material of the electrode **14** opposite to the workpiece **2** to be separated into the space between the poles and simultaneously discharged as power. The space between the poles is momentarily brought to a hot plasma state, the temperature is thousands of degrees centigrade or higher. Thus, a major portion of the material of the electrode is brought to a completely melted state. Also the surface of the workpiece disposed opposite to the electrode at a position at which the arc discharge has been generated is momentarily heated. Thus, the workpiece surface is also brought into a melted state similar to the material of the electrode. In this hot state, the molten material of the electrode and the workpiece are mixed with each other. Thus, an alloy phase between the material of the electrode and the base material of the workpiece is formed on the workpiece. Then, the working fluid between the poles causes the surrounding temperature to rapidly decrease. During the cooling process of the alloy from the hot state to the cold state, interface reactions momentarily take place between the liquid iron alloy and the solid carbide. Therefore, complete-sintering takes place in a very short time. Thus, the hard coating **16** is formed on the workpiece **2**. When the foregoing process is repeated, a fusing reaction between the surface of the formed hard coating and the material of the electrode is repeated. As the time elapses, deposition of the coating proceeds so that a thick film is formed.

To stably maintain the arc discharge a servo between the poles must be performed when an actual process is performed. The servo between the poles is an operation for maintaining a predetermined gap between the electrode and the workpiece, or a predetermined voltage between the poles which is required when the process is performed. Also, feed control is required after the electrode has been consumed is included. To maintain a predetermined gap between the poles, which varies as time elapses, or to maintain a predetermined voltage between the poles, feeding of the electrode must be preformed. The foregoing sequential control operation is called "servo between poles".

FIG. **5** is an enlarged photograph of a hard coating formed by a single discharge where the main component of the electrode is TiC. Also, as determined from the results of an analysis of the X-ray diffraction (to be described later), the hard coating was formed due to a momentary reaction. FIG. **6** shows a state of deposition of the hard coating formed by continuous discharge. A state in which hard coatings have been formed by single discharge is superimposed and deposits can be clearly observed. As described above, the electrode is compression-formed and baked so as to be brought to the incomplete-sintering and is used to cause arc discharge to continuously take place. Thus, the hard coating can be formed on the base material of the workpiece.

The hard coating can momentarily be formed due to a single discharge. Also continuous arc discharge permits a hard coating to be formed. The intermittent discharge is effective to prevent the temperature of the workpiece from rising. On the other hand, the temperature of the surface of the workpiece is comparatively low, causing the density of the hard coating to be somewhat insufficient. To prevent the foregoing problem, generation of the continuous arc discharge is required. In this case, concentration of arc discharge to one point takes place, causing a defect to occur in the machining operation. Therefore, stable arc discharge is generated while a high temperature is being maintained and servo between the poles is performed by combining the continuous arc discharge and the intermittent arc discharge. Arc discharge set to be performed at intervals of several μ seconds and continuous arc discharge which is performed for several seconds are combined with each other. When the foregoing combination is optimized according to the forming condition of the hard coating, a denser coating can quickly and reliably be deposited.

The method according to the present invention permits the hard coating to be deposited in an area of the workpiece which is substantially the same area as the area of the electrode. This advantage is unattainable with the other methods and is an excellent characteristic of the present invention. The conventional physical evaporation and chemical evaporation requires a masking process, such as plating, to perform a partial process. The method according to the present invention does not require the masking process, that is, only previous formation of an electrode having a required cross sectional area and machining are required. In a case where a large area must be machined, a small-size electrode may be used such that machining is performed while scanning the electrode similar to the milling process. Therefore, a large-size and special-shape electrode is not required. The concept of a machining method using the electrode scanning method is shown in FIG. **7**. An X-axis moving unit, a Y-axis moving unit and a Z-axis moving unit (not shown) are operated to move the electrode **14** and the workpiece **2** in the X, Y and Z directions respectively. Thus, the hard coating **16** is formed on the surface of the workpiece **2**. In a case where the workpiece **2** is a mold, the surface of the mold is not a flat surface, that is, the surface is a complicated free curved surface in a three-dimensional shape. The X-axis moving unit, the Y-axis moving unit and the Z-axis moving unit permit the small-size electrode to scan the mold such that the gap from the free curved surface of the mold is maintained or predetermined servo voltage is maintained. In this case, the electrode is quickly consumed. Therefore, feeding to correspond to the consumption of the electrode must be performed. Thus, the movement of the main shaft for supporting the electrode in the Z direction must accurately and quickly be controlled. The foregoing operation is repeated until the electrode has scanned along the entire curved surface of the mold. As a result, the hard coating can be deposited to have a predetermined thickness over the surface of the mold or various thicknesses to meet a specific requirement.

The function of the working fluid will now be described. Referring to FIG. **4**, the working fluid **4** is interposed between the electrode **14** and the workpiece **2**. The reason why the working fluid **4** is interposed lies in that 1) discharge must be stabilized to maintain the machining operation, 2) heat generated owing to the discharge must be removed and 3) a portion of the material of the electrode which cannot be used to form the hard coating on the workpiece must be removed from the space between the poles. Therefore, the foregoing working fluid has important functions. Note that the working fluid **4** is different from that of the conventional technique because it does not have the function of supplying a raw material necessarily for producing a product of reactions. Therefore, the working fluid **4** does not provide any essential materials needed for a proper reaction to take place.

Since the working fluid is not an essential element as described above, aerial discharge may be performed. A discharge surface treatment method using an aerial discharge will now be described. Referring to FIG. **8**, reference numeral **17** represents a gas source connected to a passage **18** formed in the electrode **14** through a pipe. While electric power is supplied from the power source **7**, air or a non-reactive gas, such as a nitrogen gas, is supplied from the gas source **17** in a required quantity. A supply pipe **19** is an example which is used to supply the gas from an outside portion of the electrode in a case where the passage cannot be formed in the electrode. Thus, the gas is jetted out toward the space between the poles. The gas is supplied for the same purpose of the foregoing working fluid. If the gas supply is not performed, formation of the hard coating on the work cannot stably be performed. It is preferable that the gas is air or a nitrogen gas from a viewpoint of environmental friendliness.

The representative characteristics of the formed hard coating will now be described by using obtained experiment data. FIG. **9** shows the results of X-ray diffraction of the hard coating in which an electrode, compression-formed with TiC, and baked so as to be brought to the incomplete-sintering is used to form the hard coating on the workpiece made of WC. On the surface of the workpiece, there are deposits of TiC which is the main component of the electrode, and WC which is the material of the workpiece. FIG. **10** shows the results of measurement of the Vickers hardness of the formed hard coating. The hardness of the workpiece (base material) is about 1300, while the hard coating has a hardness of about 2800. Thus, the hardness is increased. Therefore, the fact that the main component of the hard coating is TiC can be confirmed. Also the hardness of TiC is shown in FIG. **10** for reference.

Third Embodiment

A method of forming a hard coating according to a third embodiment will now be described which is capable of imparting special functions including lubricity, strength against high temperatures and wear resistance.

Mixing of a material having a self-lubricating function will now be described. In general, each of Mo, BN and Cr has a self-lubricating function. When the foregoing powder material is mixed in the material of the electrode (the electrode being of similar construction as explained in the previous embodiment) at a predetermined ratio, the material having the self-lubricating function is mixed and confined in the hard coating formed on the workpiece. When the surface of the foregoing hard coating is ground, the lubricity can be imparted to the ground surface without any lubricating means or with oil supply in a very small quantity due to the self-lubricating characteristic of the material. As described above, an ideal state is realized such the surface is made of the material of the hard coating and the material having the self-lubricating function. As a result, a sliding portion exhibiting satisfactory durability and having a low friction coefficient can be realized.

Referring to FIG. **11**, reference numeral, **20** represents a granular mixed substance having a granulation size which is, for example, two or more times the average granulation size of the main material component of the electrode and smaller than the distance between the poles. The heat decomposition of the granular mixed substances **20** does not take place even at high temperatures and must be confined in the hard coating in its original shape. The size of granulation of the granular mixed substances **20** must be enlarged to prevent the formation of a solid solution with the other carbide. The solid solution cannot be formed when the size of the granular is at least two times the average granulation size of the main component. When the granulation size is enlarged, separation from the electrode takes place and, therefore, the space between the poles is clogged in a direction toward the workpiece. In the foregoing case, short circuit takes place. Therefore, the size of granulation of the mixed substances **20** must also be smaller than the gap between the poles.

Now, a mixture of ceramics will now be described. Alumina (Al_2O_3) has excellent characteristics at high temperatures. Therefore, when alumina is mixed at a predetermined ratio, the strength against high temperatures and wear resistance can be considerably improved. Since alumina in a single state has no conductivity, it cannot be deposited on the workpiece by the discharge surface treatment. When discharge is generated by an electrode obtained by mixing alumina in the material of the electrode, the hard coating can be formed on the workpiece. Simultaneously, alumina is mixed into the hard coating. To obtain the characteristics of alumina, decomposition of alumina occurs due to the arc discharge must be prevented. Therefore, it is preferable that alumina is formed into blocks each having a certain size (see FIG. **11**) and mixed in the electrode **14**. When the size is about several μm to tens of μm, alumina is able to endure high temperatures for a very short time and then it is cooled rapidly. Therefore, alumina in the form of blocks is confined in the hard coating on the workpiece. The thus-formed coating has a two-phase structure comprising the hard coating (formed by cooling the liquid phase) and the blocks of alumina (which are not formed into the solid solution). Therefore, the characteristics of the two phases can be obtained.

Further, mixing of nitride, such as TiN, will now be described. The main object of mixing the nitride, such as TiN, in the hard coating is to improve tenacity and heat resistance. Since the foregoing nitride has no conductivity, single nitride cannot form a hard coating by the arc discharge. If an electrode is used which is obtained by mixing nitride at a mixture ratio at which the conductivity can be maintained in the material of the electrode; discharge machining is permitted. Similar to the mixing of alumina, decomposition can take place at high temperatures. The heat decomposition must be prevented by using an electrode obtained by the steps of 1) confining grains each having a comparatively large size (tens of μm as shown in FIG. **11**) in the electrode; 2) performing compression-forming; and 3) baking to realize the incomplete-sintering. When arc discharge is caused to occur by using the foregoing electrode, the blocks of nitride are confined in the hard coating formed on the workpiece. Therefore, a hard coating is formed in which the hard coating and the nitride blocks coexist. The foregoing coating has both the characteristics of the hard coating, and the characteristics of the nitride (which are excellent tenacity and satisfactory strength against high temperatures). Therefore, excellent performance can be exhibited when the foregoing coating is applied to a cutting tool or a mold.

Fourth Embodiment

A discharge surface treatment method according to a fourth embodiment of the present invention and capable of forming, on a workpiece, a denser hard coating having excellent quality and free from irregularities will now be described.

The conventional hard coating made of a hard alloy is formed by sintering a green compact, at a temperature not lower than a temperature at which a liquid phase appears, for a long time in a vacuum furnace or the like. The method of forming the hard coating by using the arc discharge according to the present invention is structured to perform very short durations of the reactions and form the hard coating (main sintering) at a very high temperature not lower than the sintering temperature in the vacuum furnace. Therefore, there is apprehension that the hard coating may have incomplete characteristics.

A method of overcoming the above-mentioned problem will now be described. Initially, grains (blocks each having a size of tens of μm) of a hard alloy obtained by sintering is mixed with the material of the electrode in a predetermined quantity. Then, the electrode is compression-formed, and then baked to produce the incomplete-sintering electrode. The thus-manufactured electrode is used to perform discharge machining. A powder electrode component and a solid electrode component are simultaneously discharged to the space between the poles. The powder electrode component is formed into the liquid phase due to the high temperature, and then cooled to form the hard coating. Since the temperature of the solid electrode component is not raised sufficiently, the solid characteristic is maintained. Therefore, a hard coating containing the solid component can be formed. The thus-formed hard coating has a denser tissue, free from hardness irregularities, and excellent characteristics as compared with the hard coating which is formed using an electrode made only of powder.

Fifth Embodiment

FIG. **12** is a diagram showing a state in which the discharge surface treatment method according to the present invention is applied to a mold structured as shown in FIG. **17** and formed by precise forging. Referring to FIG. **12**, reference numeral **16** represents a hard coating formed on the surface of a base material **100** of the mold. The base material **100** of the mold is previously machined by a machining operation. In the case shown in FIG. **12**, a hexagonal hole is formed by machining. Usually, the base material **100** of the mold is not subjected to heat treatment. Although heat treatment in a lowest degree is sometimes performed, the hard coating is made to be comparatively low, for example, Rockwell hardness (scale C) HRC=about 30. The reason for this lies in that machinability required to perform the machining process must be maintained. If the hardness is higher than the above-mentioned value, excessive abrasion of the tool takes place, causing the cost of manufacturing the mold to increase. Then, a thick hard coating is formed on the surface of the base material of the mold. The method is the same as that according to the second embodiment shown in FIG. **7** so that the hard coating is formed on the workpiece. The thickness of the hard coating is about 0.5 mm to about 1.0 mm from a viewpoint of practical use. Then, discharge machining, using a copper electrode or a graphite electrode or a wire discharge machining is performed to the mold's required dimensions.

The mold shown in FIG. **12** has substantially the same quality as that of the mold shown in FIG. **17** and a long lifetime can be realized.

The foregoing discharge surface treatment method has an advantage in that application to a mold is permitted regardless of the size and the shape of the mold.

FIG. **13** shows a process for manufacturing a mold structured as shown in FIG. **12**. A first step performed is machining the base material of the mold and forming the electrode. Then, the second step of discharge surface treatment using an electrode according to the first to fourth embodiments is performed. Thus, an operation for depositing a hard coating on the surface of the mold which has previously been machined is performed. In the foregoing case, the hard coating may be deposited to have a thickness of several mm to prepare for a secondary machining operation. Then, in a third step, discharge machining is performed as a secondary machining operation to realize the required dimensions of the mold. Then, the manufactured mold is actually used. The foregoing mold having the thick hard coating exhibits significant durability. After the mold has been used many times, abrasion or partial breakage of the mold sometimes occur. Therefore, the discharge surface treatment in the fourth step by using the electrode baked to the incomplete-sintering enables only the broken portion to be repaired. Thus, the foregoing mold can be used again. Hence, re-manufacturing of the mold is not required. When the fourth step is repeated, the mold can be semipermanently used. In the case of a large-size mold, the manufacturing cost of which is very large, the manufacturing cost and maintaining cost can be considerably saved. Since the quantity of the material for manufacturing the mold can be considerably reduced, an optimum method can be obtained from an energy saving and environmental friendliness viewpoint.

Sixth Embodiment

FIG. **14** shows a sixth embodiment of the present invention, in which the present invention is applied to a pressing mold. As shown in FIGS. **14**(*a*) and (*b*), an electrode **14** formed according to the first to fourth embodiments is used to subject the inside portion of a cutting blade **140** of a die to a discharge surface treatment. As shown in FIG. **14**(*c*), a hard coating **16** is formed. Also the hard coating is formed on the outer surface of a punch **136** and the edge of a cutting blade **138** of the punch shown in FIG. **14**(*d*). Then, as shown in FIG. **14**(*e*), a wire electrode **150** is used to perform discharge-machining of a cutting blade **139** so that a predetermined dimension accuracy is realized. FIG. **14**(*d*) shows an example in which a grinding operation is performed by using a grindstone **151** to finish the outer surface of the cutting blade **138**. As described above, the electrode baked to be brought to the incomplete-sintering is used to perform the discharge surface treatment. Thus, a thick and hard coating can easily be formed on the surface of the mold in a short time. Then the secondary machining process is performed to realize the specified dimensions of the mold. As a result, a mold having high quality can be manufactured.

Seventh Embodiment

A contrivance of application to a mold which is a seventh embodiment of the present invention will now be described. In an actual case, the worn portion is locally limited. Therefore, the local wear determines the lifetime of the mold. In such a case, the lifetime is improved by employing a method shown in FIG. **15**. That is, as shown in FIG. **15**(*a*), an upper surface (parting line) **105** and a portion adjacent to the inlet portion of the mold which are considerably worn, are coated with a thick coating. As a method capable of realizing this structure, a scanning method using the simple electrode shown in FIG. **7** or a method using a forming electrode **112** as shown in FIG. **15**(*b*) may be used. When a compression load is exerted, the portion in the vicinity of the bottom surface of the mold is free from considerable wear in many cases. Therefore, a relatively thin coating may be employed or the coating may sometimes be omitted.

A method of manufacturing the profile electrode as shown in FIG. **15**(*b*) will now be described. Initially, a mold is used to manufacture an electrode in the form of a green compact by compression-forming. Then, baking is performed to realize the incomplete-sintering so that a profile electrode, as shown in FIG. **15**(*b*), is manufactured. Therefore, the time required to manufacture the electrode can considerably be shortened. To realize the foregoing effect, the previous machining operation must be performed in such a manner that the mold is finished in consideration of a thickness corresponding to the thickness of a coating which will be formed in a next discharge surface treatment process. Even if the mold, which is being used, is used to manufacture the profile electrode, a gap required in the discharge surface treatment, which is performed after the previous machining operation has been performed, can be maintained. When the profile electrode has previously been manufactured, local deposition of the hard coating can easily be permitted by performing the discharge surface treatment if the mold is worn. Therefore, modification of the mold can be completed in a very short time. Moreover, a necessity of manufacturing another mold for the purpose of manufacturing the profile electrode can be eliminated.

Industrial Applicability

As described above, the electrode for discharge surface treatment, the manufacturing method therefor, the discharge surface treatment method and the apparatus therefor according to the present invention are suitable to be used in an industrial field concerning the structure for forming a hard coating on the surface of a work.

What is claimed is:

1. An electrode for discharge surface treatment with which electrical discharge between the electrode and a workpiece is used to generate energy to form a coating on a surface of the workpiece, said electrode comprising:

a hard material which is made from metal powder, powder of a metal compound, powder of a ceramic material or a combination of said powders, and

a binder having a lower melting temperature than said hard material;

wherein said hard material is harder than said binder;

wherein after said electrode has been formed by compression, baking is performed at an incomplete-sintering temperature at which a portion of the binder of said electrode is melted in order to partially fill gaps between particles of said hard material.

2. An electrode for discharge surface treatment with which electrical discharge between the electrode and a workpiece is used to generate energy to form a coating on a surface of the workpiece, said electrode comprising:

a hard material which is made from metal powder, powder of a metal compound, powder of a ceramic material or a combination of said powders,

a binder having a lower melting temperature than said hard material; and

wax;

wherein said hard material is harder than said binder;

wherein after said wax has been added to said hard material and said binder, forming is performed by compression, heating is performed to evaporate and remove said wax at a temperature at which said wax is melted but not decomposed or caused to soot, and then baking is performed at an incomplete-sintering temperature at which a portion of said binder is melted in order to partially fill gaps between particles of said hard material.

3. The electrode for discharge surface treatment according to claim **1** or **2**, wherein baking is performed at an incomplete-sintering temperature not lower than 400° C. and lower than 1100° C.

4. The electrode for discharge surface treatment according to claim **1** or **2**, wherein powder of a material having a self-lubricating function, powder of nitride or a combination thereof is mixed with said hard material and said binder before said electrode is formed by compression.

5. The electrode for discharge surface treatment according to claim **1** or **2**, wherein sintered particles of an alloy are mixed with said hard material and said binder before said electrode is formed by compression.

6. A method of manufacturing an electrode for discharge surface treatment with which electrical discharge between the electrode and a workpiece is used to generate energy to form a coating on a surface of the workpiece, said method comprising the steps of:

mixing a hard material and a binder to form a mixture, wherein said hard material is made from metal powder, powder of a metal compound, powder of a ceramic material or a combination of said powders and said binder having a lower melting temperature than said hard material, wherein said hard material is harder than said binder;

compressing said mixture to form an electrode; and

baking said electrode at an incomplete-sintering temperature at which a portion said binder is melted in order to partially fill gaps between particles of said hard material.

7. A method of manufacturing an electrode for discharge surface treatment with which electrical discharge between the electrode and a workpiece is used to generate energy to form a coating on a surface of the workpiece, said method comprising the steps of:

mixing a hard material and a binder to form a mixture, wherein said hard material is made from metal powder, powder of a metal compound, powder of a ceramic material or a combination of said powders and said binder having a lower melting temperature than said hard material, wherein said hard material is harder than said binder;

adding wax to said mixture,

compressing said mixture to form an electrode; and

heating said electrode to evaporate and remove said wax at a temperature at which said wax is melted but not decomposed or caused to soot, and

baking said electrode at an incomplete-sintering temperature at which a portion of said binder is melted in order to partially fill gaps between particles of said hard material.

8. The method of manufacturing an electrode for discharge surface treatment according to claim **6** or **7**, wherein baking is performed at an incomplete-sintering temperature not lower than 400° C. and lower than 1100° C.

9. The method of manufacturing an electrode for discharge surface treatment according to claim **6** or **7**, wherein powder of a material having a self-lubricating function, powder of nitride, or a combination thereof is mixed with said hard material and said binder before said electrode is formed by compression.

10. The method of manufacturing an electrode for discharge surface treatment according to claim **6** or **7**, wherein sintered particles of an alloy are mixed with said hard material and said binder before said electrode is formed by compression.

11. A discharge surface treatment method with which electrical between an electrode and a workpiece is used to generate energy to form a coating on a surface of the workpiece, said method comprising the steps of:

mixing a hard material and a binder to form a mixture, wherein said hard material is made from metal powder, powder of a metal compound, powder of a ceramic material or a combination of said powders and said binder having a lower melting temperature than said hard material, wherein said hard material is harder than said binder;

compressing said mixture to form an electrode; and

baking said electrode at an incomplete-sintering temperature at which a portion-said binder is melted in order to partially fill gaps between particles of said hard material; and

causing arc discharge to occur between said electrode and said workpiece so that energy of said arc discharge is used to form the coating on the surface of said workpiece, wherein said arc discharge can be a intermittent arc discharge, a continuous arc discharge or combination of said continuous arc discharge and said intermittent arc discharge.

12. The discharge surface treatment method according to claim **11**, wherein said baking is performed at an incomplete-sintering temperature not lower than 400° C. and lower than 1100° C.

13. The discharge surface treatment method according to claim **11**, wherein a non-reactive gas is interposed between said electrode and said workpiece.

14. The discharge surface treatment method according to claim **11**, wherein said electrode scans said workpiece to form said coating on the surface of said workpiece.

15. The discharge surface treatment method according to claim **11**, wherein powder of a material having a self-lubricating function, powder of nitride, or a combination thereof is mixed with said hard material and said binder before said electrode is formed by compression.

16. The discharge surface treatment method according to claim **11**, wherein sintered particles of an alloy are mixed with said hard material and said binder before said electrode is formed by compression.

17. The discharge surface treatment method according to claim **11**, wherein said workpiece is a mold having a previously applied coating on a surface of a base material of said mold, and wherein said previously applied coating is repaired by discharging a new coating in locations of said previously applied coating which need repair.

18. The discharge surface treatment method according to claim **17**, wherein said new coating is thicker than the previously applied coating so that highly worn portions of said previously applied coating are thicker than portions with little wear.

19. The discharge surface treatment method according to claim **17**, wherein a portion of said mold in which abrasion has occurred is repaired by performing discharge surface treatment using said electrode.

20. The discharge surface treatment method according to claim **19**, wherein a forming electrode is manufactured by using said base material of said mold subjected to said previous machining, and said portion of said mold in which abrasion has occurred is repaired by performing discharge surface treatment which uses said forming electrode.

21. A discharge surface treatment apparatus for causing discharge to occur between an electrode and a workpiece is used to generate energy to form a coating on a surface of the workpiece, said discharge surface treatment apparatus comprising:

discharge generating means for generating arc discharge between said electrode and said workpiece, wherein said arc discharge is intermittent arc discharge, continuous arc discharge or a combination of said continuous arc discharge and intermittent arc discharge; and

wherein said electrode further comprises:

a hard material which is made from metal powder, powder of a metal compound, powder of a ceramic material or a combination of said powders, and

a binder having a lower melting temperature than said hard material;

wherein said hard material is harder than said binder;

wherein after said hard material has been formed by compression, baking is performed at an incomplete-sintering temperature at which a portion of the binder of said electrode is melted in order to partially fill gaps between particles of said hard material.

22. The discharge surface treatment apparatus according to claim **21**, wherein baking is performed at an incomplete-sintering temperature not lower than 400° C. and lower than 1100° C.

23. The discharge surface treatment apparatus according to claim **21**, further comprising inert-gas supply means for interposing a non-reactive gas between said electrode and said workpiece.

24. The discharge surface treatment apparatus according to claim **21**, further comprising an X-axis moving unit, a Y-axis moving unit and a Z-axis moving unit for relatively moving said electrode and said workpiece in an X direction, a Y direction and a Z direction.

* * * * *